NORTH
AMERICAN
DRAGER

Technical Service Manual

North American Drager
148-B Quarry Road
Telford, PA 18969
(215) 723-9824

June 1985

This manual was prepared for NAD customers strictly as a courtesy and a source for information. North American Drager does not imply that the contents of this manual applies to every NAD product, nor that the information contained herein covers every aspect of maintenance and repair of NAD equipment.

North American Drager will not provide regular updates of this manual's content. Service manuals will be revised from time to time and are available for a fee from the NAD Technical Service Department.

Distribution of this manual by North American Drager does not constitute an authorization for the performance of repairs on North American Drager equipment by any person other than trained service representatives of NAD Authorized Technical Service Centers, nor will North American Drager warrant any service performed by such persons.

Furthermore, North American Drager does not intend by offering technical literature and diagrams to the customer of NAD products to preempt the utilization of regular preventive maintenance and repair service by NAD Authorized Technical Service Centers.

Only parts manufactured or sold by North American Drager shall be used for repair.

When technical assistance is required or when ordering parts contact the local NAD Authorized Technical Service Center.

Description of Equipment

The NARKOMED 2A Anesthesia System is a device to allow the administration of anesthetic and non-anesthetic gases to patients. If equipped with vaporizers, the machine is also capable of delivering anesthetic agents in form of vapors in conjunction with these gases. The Vapor vaporizer converts a liquid anesthetic into a measured amount of vapor, which is carried to the patient in the predetermined gas mixture.

An Absorber System accepts exhaled patient gases and removes the exhaled carbon dioxide. This allows for readministration of a portion of the exhaled gas in combination with fresh gas mixtures.

The Ventilator allows the operator to mechanically control the patients ventilation. The operator can preset the tidal volume, inspiratory flow rate, I/E ratio and frequency. The use of the ventilator eliminates the task of manual ventilation by rythmically squeezing the anesthesia breathing bag.

An Oxygen Monitor is used to determine the inhaled oxygen concentration and helps to prevent the administration of gas mixtures with insufficient oxygen.

The Scavenger Interface prevents the discharge of waste gases into the atmosphere. These waste gases are instead channeled into the vacuum system via the Scavenger Interface.

The electrically powered alarm panel contains numerous indicators to alert the operator in such cases as a disconnected breathing tube, high system pressure, oxygen supply failure and other potentially dangerous situations.

The anesthesia system is normally operated with pressurized medical gases from a central supply system. Oxygen is the prime gas. If a failure of the central oxygen supply system occurs, the anesthesia machine will then automatically shut off all other gases and warn the operator of such oxygen supply failure. By activating the oxygen cylinder, which is attached to the anesthesia machine, the unit is again functional and the supply of all other gases is automatically restored.

If an electrical power failure should occur, the battery back-up system will automatically supply electric power to all electric and electronic components of the anesthesia machine with the exception of certain monitors and the 2 (two) 117 VAC receptacles in the power pack. The reserve power will allow the operator to conclude the current procedure safely.

If the NARKOMED 2A is equipped with a data communication network system, all alarm functions will be centrally displayed in a predetermined order.

NARKOMED 2A

Front View

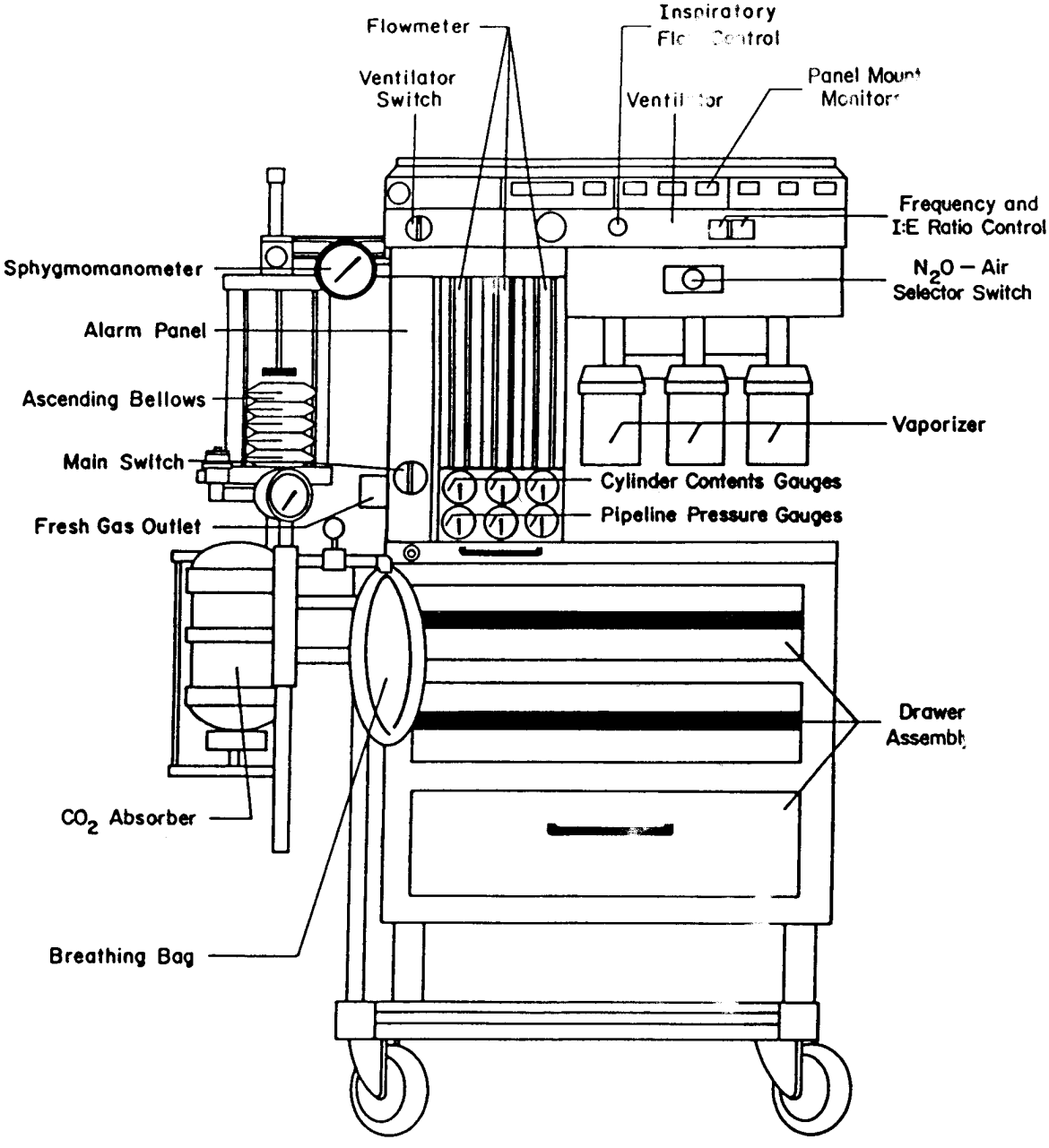

NARKOMED 2A
Left Side

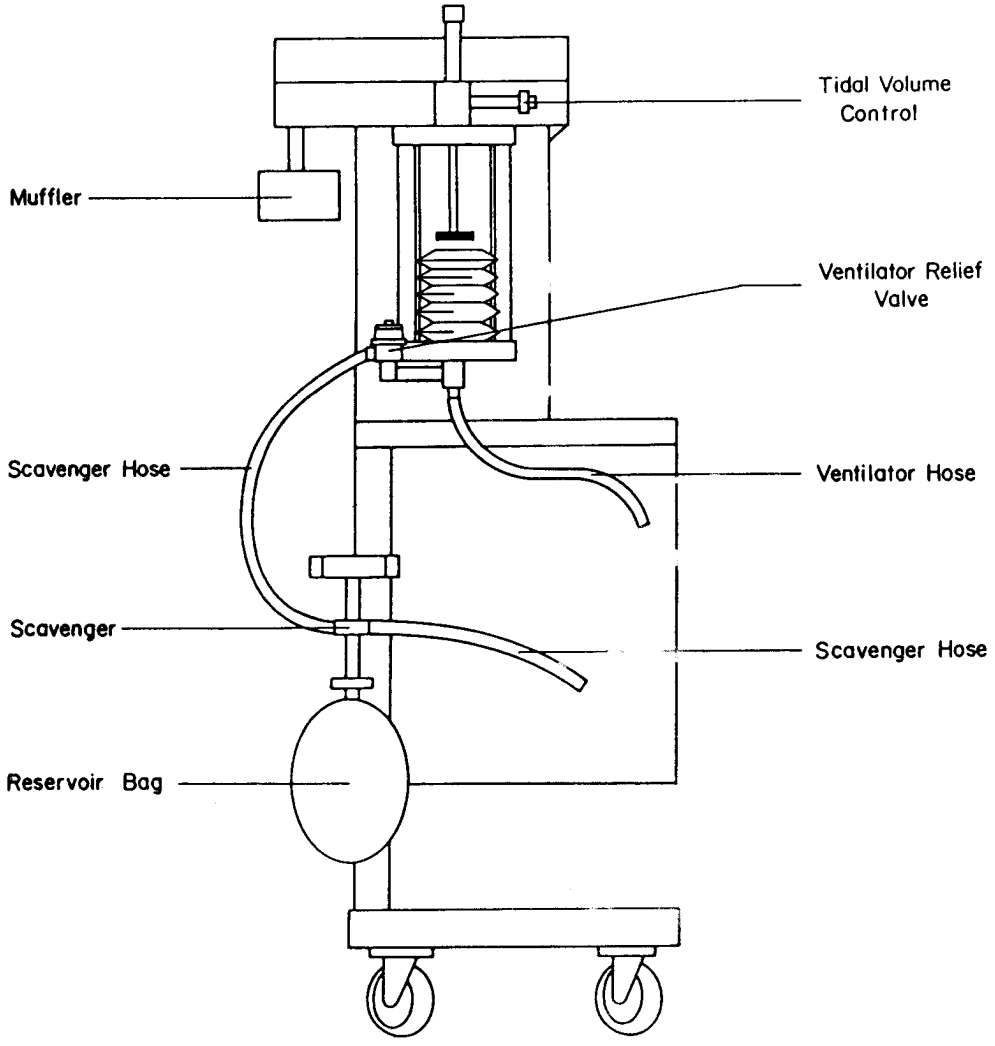

NARKOMED 2A
Rear View

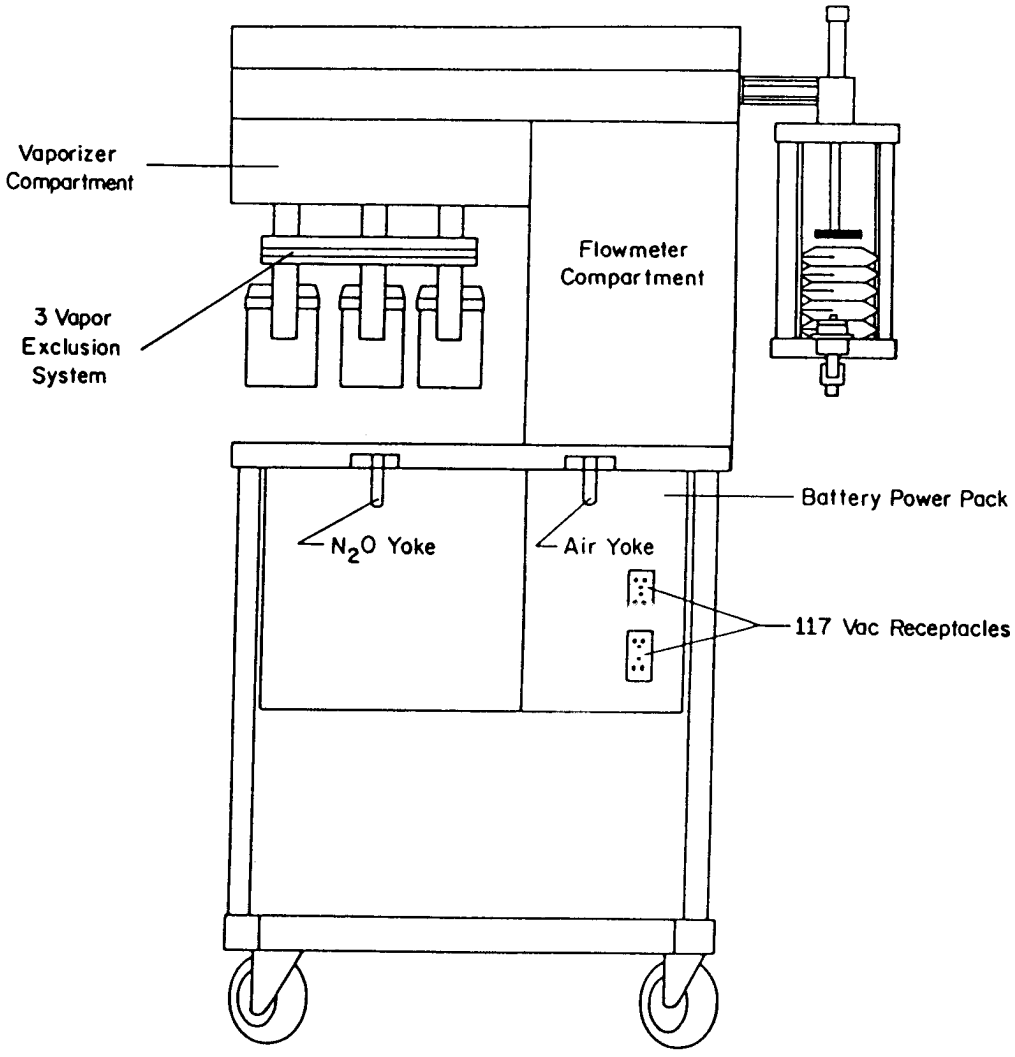

NARKOMED 2A
Right Side

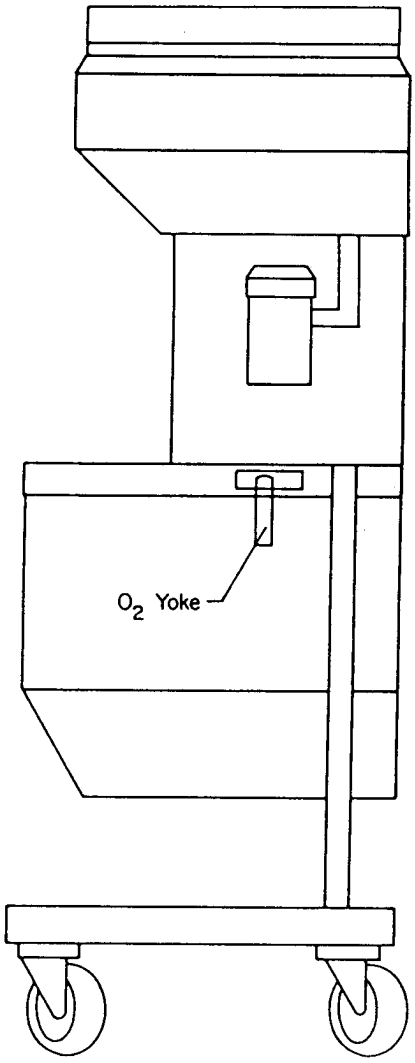

Safety Precautions

Do's	Don'ts
When moving anesthesia machine - Always touch handles and pull machine while walking backwards	Never handle machine by pulling or pushing accessories Never push machine into elevators, rooms, etc.
Always unplug pressure hoses and electric cords before moving equipment	Never move machine without having all hoses and cords secured
Always turn cylinders off and drain system of residual gases before moving equipment	Never leave cylinders turned on while moving equipment
Always turn flow valves, vaporizers, monitors, ventilator and main switch off when machine is not in use	Never leave main switch turned on when equipment is not attended
Always activate oxygen flush for several seconds after the anesthesia system was shut down	Never leave residual gases other than oxygen in the anesthesia breathing system after completion of procedure
Always clean your hands thoroughly before servicing anesthesia equipment	
Use only Lubricants as specified by NAD	Never use oil or other lubricants on equipment which comes in contact with oxygen. Oil and oxygen under pressure can be explosive
Service equipment only in a well ventilated area	Avoid inhalation of vapors and gases
Replace malfunctioning cylinder regulators	Never attempt to repair high pressure cylinder regulators
Send Vapor vaporizers to NAD for service	Never attempt to disassemble, repair, or recalibrate Vapor Vaporizers
Drain and dry vaporizers before transport (see Vapor vaporizer test procedure)	
	Never operate the anesthesia machine, unless the electrical power cord is plugged into a 117 VAC receptacle

Operation of Equipment

1.0. Basic Requirements

1.1. The operation of the equipment requires careful study of all appropriate instruction manuals

1.2. A patient breathing circuit with Y-piece, 2 (two) Drager Training Thorax's or equivalent to simulate the patient's lung functions and a breathing bag must be connected to the NARKOMED 2A anesthesia machine

1.3. 50 psi oxygen, nitrous oxide and air pressure sources must be connected to the appropriate DISS gas inlets on the anesthesia machine.
Small medical gas cylinders for oxygen, nitrous oxide and air must be connected to the appropriate yokes.
Do not fill vaporizers with liquid anesthetic agent

1.4. All switches and valves on the NARKOMED 2A Anesthesia Machine must be turned to the following positions:

- Main switch OFF (9 o'clock position)
- APL Valve open (fully counterclockwise)
- N_2O/Air Selector Switch set to N_2O position
- Flow control valves closed (fully clockwise)
- Manual/Automatic Selector Valve to BAG
- Minimum Ventilation Pressure Switch to lowest cm H_2O setting
- Vaporizers to 0 (zero) position
- Ventilator Switch OFF (9 o'clock position)
- Tidal Volume Control to 500cc
- Inspiratory Flow Control OFF (fully counterclockwise)
- Frequency Control to 10 BPM
- I:E Ratio Control to 1:2
- Small gas cylinders OFF (fully clockwise)

2.0. Start-Up Procedure

2.1. Connect gas pressure hoses to central piping system and check pipeline pressure gauges

2.2. Plug electrical cord into 117 VAC outlet

2.3. Connect the central vacuum system to the scavenger interface and close the vacuum control valve

2.4. Turn the main switch on. With all flow control valves still in the OFF position, a minimum oxygen flow of approximately 250 to 300cc will be administered

2.5. Turn N_2O/Air selector switch to Air position. The minimum oxygen flow will stop. Turn the N_2O selector switch again to the N_2O position
The minimum oxygen flow is only activated when O_2/N_2O mixtures are administered. No minimum oxygen flow is required in conjunction with air since air already contains 21% oxygen. Therefore, no danger exists, that a hypoxic gas mixture may be administered (for oxygen concentrations in O_2/Air mixtures see **Specifications/Tolerances** in the Service Manual)

2.6. Calibrate oxygen monitor. If the entire breathing system is charged with pure oxygen the oxygen monitor should read 100% O_2

3.0. Manual Ventilation

3.1. Set oxygen flow to 3 l/min and nitrous oxide flow to 3 l/min (Oxygen monitor will read 50% O_2)

3.2. Fill breathing bag with gas mixture and turn APL valve clockwise until it is almost closed (If bag fills too slowly, activate the oxygen flush button and fill the breathing bag)

3.3. Slowly squeeze the breathing bag and observe the training thorax expand. Also observe the absorber pressure gauge. Several cm H_2O positive pressure should develop during inspiration

3.4. Relax the breathing bag. Air will leave the training thorax and the bag will fill again

3.5. At this time check the scavenger interface. Open the needle valve so that the reservoir bag does not collapse completely during inspiration or over inflate during expiration

3.6. Ventilate the patient (training thorax) and change oxygen flow, APL valve setting, respiration rate, lung compliance or lung resistance, see 4.6

3.7 Turn the nitrous oxide flow valve to maximum (oxygen flow still at 3 l/min.) The O.R.M.c. alarm will be activated and at one point the nitrous oxide flow will not increase any further (approximately at 7 l/min N_2O) The oxygen monitor will indicate 28% ± 3% oxygen concentration

3.8. Increase the oxygen flow. The alarm will eventually cease - or decrease the nitrous oxide flow and the alarm will also cease

3.9. Set O_2 flow to 3 l/min and N_2O flow to 7 l/min. Slowly decrease the oxygen flow. As the oxygen flow decreases so will the nitrous oxide flow. At approximately 500cc O_2 the N_2O flow will completely stop, while the N_2O flow valve is still open

3.10. If an O.R.M. instead of an O.R.M.c. is used, an alarm will be activated when the oxygen concentration drops below 30% ± 5%. The nitrous oxide flow is not automatically controlled

3.11. Set O_2flow to 4 l/min and N_2O flow to 10 l/min. Disconnect the oxygen supply source and observe the pipeline pressure gauge. The O_2 supply pressure alarm will be activated as the oxygen pressure drops. Simultaneously, as the oxygen flow drops, the nitrous oxide gas flow will drop. This safety feature is caused by the oxygen failure protection device

3.12. Turn N_2O/Air selector switch to Air position and turn the air flow control valve on. No air will flow

3.13. Restore oxygen supply. Immediately an air flow is available. Air is also controlled by an oxygen failure protection device

3.14. Turn N_2O/Air switch to N_2O position. Immediately the nitrous oxide will flow

3.15. Disconnect the oxygen supply source and turn on the small oxygen cylinder. All gases will be restored

4.0. Automatic Ventilation

4.1. Turn OFF the nitrous oxide flow and set oxygen flow to 4 l/min

4.2. Turn ventilator switch to 12 o'clock position

4.3. Set inspiratory flow rate to center of medium on flow gauge

4.4. Set manual/automatic selector valve to AUTOMATIC position. The patient (training thorax) is now mechanically ventilated

4.5. Disconnect the breathing tube from the inspiratory valve on the CO_2 absorber. After 15 (fifteen) seconds the minimum ventilation alarm will be activated. The alarm will cease when the breathing tube is connected again

Automatic Ventilation

4.6. Change tidal volume, inspiratory flow rate, frequency, I:E ratio, lung compliance and resistance to create numerous ventilatory patterns

5.0. Shut-Down Procedure

5.1. Turn ventilator switch OFF

5.2. Disconnect nitrous oxide and air supply hoses

5.3. Turn nitrous oxide and air cylinders OFF

5.4. With N_2O/Air selector switch in air position, turn oxygen flow to 3 l/min and air flow control to maximum. As soon as air flow has ceased, close air flow control valve and set N_2O/Air selector switch to N_2O position

5.5. With oxygen flow at 3 l/min, set nitrous oxide flow to 5 l/min. As soon as nitrous oxide flow has ceased, close nitrous oxide and oxygen flow control valves

5.6. Turn main switch OFF

5.7 Disconnect oxygen supply hose and turn the small oxygen cylinder OFF

5.8. Activate the oxygen flush button until oxygen flow ceases

5.9. All pipeline and cylinder gauges must indicate 0 (zero) pressure

5.10. Remove patient circuit and training thorax

5.11. Unplug and store power cord

Clinical Application of Anesthesia System

The NARKOMED 2A Anesthesia System is a device to allow the administration of anesthetic and non-anesthetic gases to patients. If equipped with vaporizers, the machine is also capable of delivering anesthetic agents in form of vapors in conjunction with these gases. The Vapor vaporizer converts a liquid anesthetic into a measured amount of vapor, which is carried to the patient in the predetermined gas mixture.

(See the schematic **Anesthesia Systems with Patient Breathing Circuit** as basis for the following text)

Before anesthesia can be administered, oxygen, nitrous oxide and if needed other medical gases must be connected to the anesthesia machine. The vaporizer(s) must be filled with anesthetic agent(s). The absorber canisters must be filled with Sodasorb. Breathing bag, patient breathing circuit and all accessory tubings and bags must be connected. After the electrical power cord is plugged in, the oxygen and other medical gases are turned on, and the vacuum line is connected to the waste gas elimination system, the anesthesia machine is ready for service.

The operator selects the oxygen/nitrous oxide gas flow which is gradually filling the breathing bag. He then connects the patient circuit to the endotracheal tube. As he squeezes the breathing bag the gas mixture moves through the CO_2 absorber and the inspiratory valve into the patient's lungs. As soon as the operator releases the breathing bag the patient exhales through the expiratory valve into the breathing bag.

In the breathing bag, the exhaled gas mixes with the fresh gas, which is flowing constantly. As soon as the bag is squeezed again the fresh and exhaled gas mixture is forced through the CO_2 absorber, where the exhaled carbon dioxide is removed and the ventilatory cycle is repeated.

During the above process, the operator may select an anesthetic agent such as Halothane, Enflurane or Isoflurane. He will turn the concentration knob to the desired volume percent concentration of the appropriate vaporizer. The predetermined gas mixture (oxygen, nitrous oxide, air) will pass through the vaporizer and carry the anesthetic vapor to the breathing bag.

The operator can also determine the inspiratory pressure for ventilating the patient by adjusting the APL valve. The wider the valve is open, the lower the pressure. The further the valve is closed, the higher the pressure. The APL valve also serves as a relief valve for excess gases. These waste gases are channeled to the scavenger interface and safely removed through the central vacuum system. Never must the APL valve be closed completely during manual or spontaneous ventilation. A complete closure of the valve will cause an excessive pressure build up.

The operator can monitor pressures during the ventilatory process on the pressure gauge. A plastic tubing, which is connected to the CO_2 absorber, transfers pressures to a central pressure alarm monitor. Excessively high, negative or continuing pressures are registered and the operator is warned by an alarm signal.

The operator may also switch from manual to mechanical ventilation. He will turn on the anesthesia ventilator and preset the tidal volume, inspiratory flowrate, frequency and I:E ratio. By switching the manual/automatic selector valve to the automatic position, the patient is now under controlled mechanical ventilation. Should a tubing of the patient's breathing circuit become disconnected, the operator will be warned by the pressure monitor.

The fresh and exnaled gases no longer enter the breathing bag. They are instead channeled to the bellows of the ventilator. Since the APL valve is also by-passed together with the breathing bag, the ventilator relief valve replaces the APL valve during mechanical ventilation. Since the ventilator relief valve is automatically controlled by the ventilator, no adjustment of this valve is necessary.

Should the patient require high concentrations of oxygen instantaneously, the operator can activate the oxygen flush button. Once activated, the flowmeters and vaporizer are by-passed and oxygen is administered to the patient without anesthetics. The flush button can also be activated, even when the main switch of the NARKOMED 2A is turned OFF. This allows the operator to administer high oxygen concentration in an emergency, even after the anesthesia is already completed.

ANESTHESIA SYSTEM
WITH PATIENT BREATHING CIRCUIT

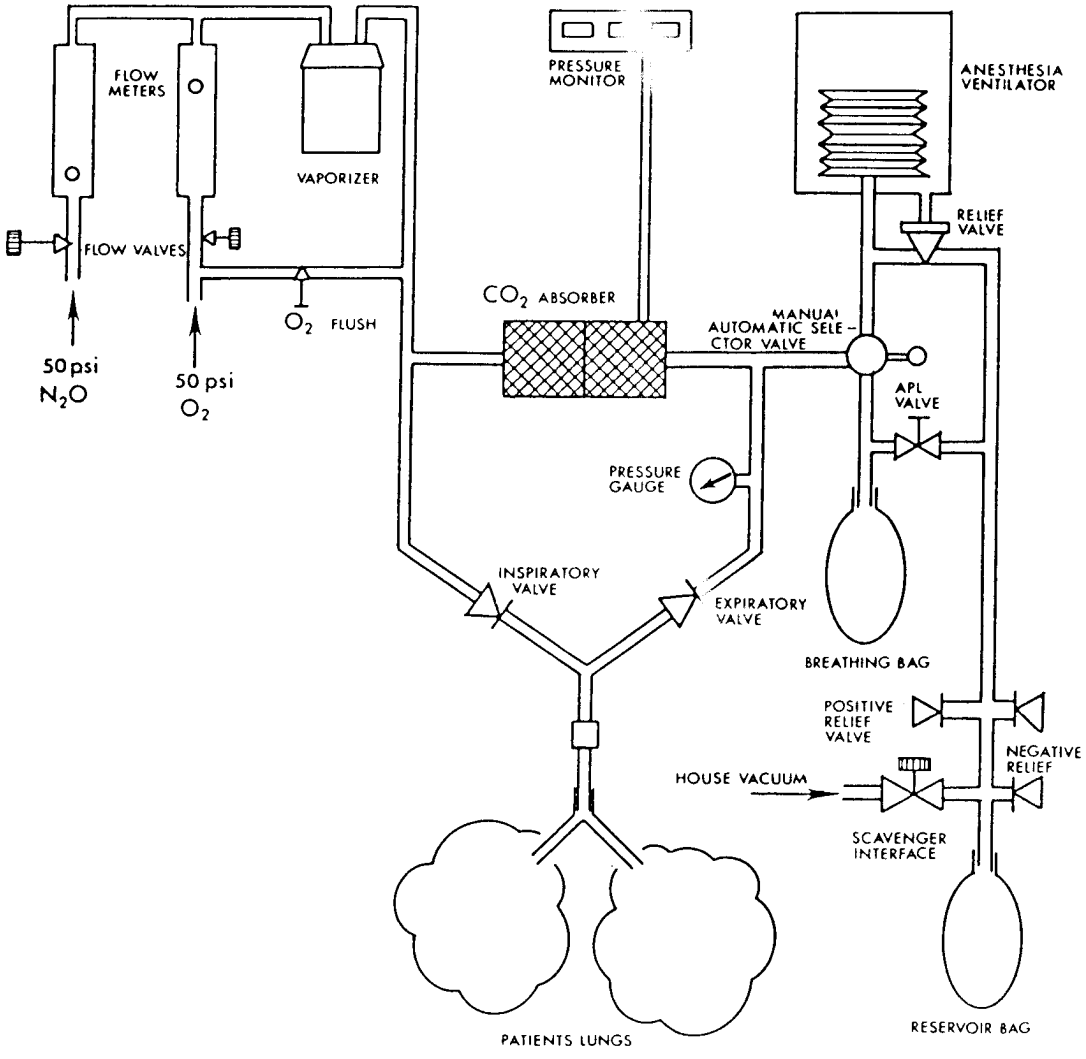

TEST INSTRUMENTS

REQUIRED MATERIAL

Table of Contents

Required Material

The following literature, test instruments, tools and supplies are required for the entire anesthesia equipment training program:

1.0. Literature

1.1. NAD Service Manual
1.2. Operator's Manual

2.0. Test Instruments

2.1. NAD Flowmeter Test Stand - S000058 A
2.2. Drager Minute Volumeter 3000 - 2212300 A
2.3. Pressure Switch Tester - 4105465 A
2.4. Oxygen Monitor - 4106158 A
2.5. Multimeter Model 22-191 (Radio Shack)
2.6. Riken Gas Analyzer Model 18
2.7. Drager Training Thorax - 2113333 A
2.8. Regulator Test Gauges:
    Oxygen - S000063 A
    Nitrous Oxide - S000064 A
2.9. Pipeline Pressure Gauges
    Oxygen - S000083 A
    Nitrous Oxide - S000084 A
2.10. Micro Pump Automatic Halogen Leak Detector TIF 5500 (TIF Instruments INC.)
2.11. Test Terminal With BP Bulb

3.0. Tools

3.1. Standard Type
    Allen wrenches (smallest .50)
    Open end wrenches
    Flat screw drivers
    Combination pliers
    Regular pliers
    Vise grip
    Wire cutters
    Knife
    Small hammer
    Adjustable wrenches
    Needle nose pliers

3.2. Special Type
    Allen wrenches (10" - 12" long)
    Metric allen wrench 3mm

4.0. Supplies

4.1. Leak Detector
4.2. Unbrako Loctite
4.3. Stop Cock Grease - 4105908 A
4.4. Teflon Tape
4.5. Various sizes cable ties

2.1. Flowmeter Test Stand
S000058 A

1.0. The calibrated test flowmeter is used to check anesthesia flowmeters for correct readings

2.0. Testing the Anesthesia Oxygen Flowmeters:

2.1. Turn all flowmeters and vaporizers on anesthesia machine OFF
2.2. Connect test flowmeter to common outlet
2.3. Set oxygen flow on anesthesia machine to a given flow rate. The test flowmeter should indicate the same flow rate

3.0. Follow above procedure when testing other gases

3.1. NOTE:
Always consult calibration table for the test flowmeter to determine the exact conversion factor

4.0. -If test flowmeter shows higher flow than anesthesia flowmeter:
flowtube may be dirty
-If test flowmeter shows lower flow than anesthesia flowmeter:
check system for leaks

2.2. Volumeter 3000
2212300 A

1.0. The volumeter can be used to determine the flow of the oxygen flush system and tidal volumes as delivered by the ventilator

2.0. Testing the Oxygen Flush System:

2.1. Turn all flowmeters OFF (on NM2, turn main switch to OFF position)
2.2. Disconnect fresh gas hose from common outlet
2.3. Connect metal elbow to volumeter
2.4. Connect hose with 15mm and 22mm connectors to metal elbow and fresh gas outlet
2.5. Depress left button on volumeter (see Fig. 3 of Volumeter Instructions)
2.6. Depress oxygen flush button until volumeter timer stops. Minute ventilation of oxygen flush should be approximately 50 l/min (at least 3 full revolutions of small hand on volumeter)

3.0. Testing of Tidal Volumes:

3.1. Attach volumeter below the expiratory valve on the anesthesia machine (see Fig. 2 of Volumeter Instruction)
3.2. Set manual/automatic selector switch to AUTOMATIC
3.3. Select tidal volume and turn ventilator ON
3.4. Depress right button of volumeter (see Fig.4 of Volumeter Instruction) while bellows is resting in the DOWN position
3.5. Depress right button **half way** as soon as bellows comes to rest in the UP position
3.6. NOTE:
The tidal volume reading on the volumeter may vary from the preset tidal volume depending on circuit compliance

A considerably lower registered tidal volume compared to the preset tidal volume may be caused by a leak in the system

2.3. Pressure Switch Tester
S4105465 A

1.0. Product Description

The pressure switch tester is a device to test the performance of pressure sensitive switches as used in North American Drager pressure monitors. It allows to simulate pressure related clinical conditions to determine the proper function of pressure monitor alarms. The pressure switch tester can also be used to test Dehart and MPL switches individually.

2.0. Specifications

Power Source: Four 1.5 volt alkaline batteries, Size C

Pressure Indicator: NAD pressure gauge - minus 20cm H_2O to plus 80cm H_2O

Pressure Release: MJV clippard valve

Pneumatic Input and Output: Female luer connectors

Audible Alarm: Sonalert® 4-28 volts DC

Electrical Connectors: Banana jack positive (+ red), Banana jack negative (− black)

3.0. Accessories

1 ea. S4105437 - red test connector
1 ea. S4105438 - black test connector
1 ea. S4105436 - disposable syringe
1 ea. pneumatic input PVC tubing S8808002, with hose barb S4105443 (syringe) and male luer connector S1101395 (input)
1 ea. pneumatic test PVC tubing S8808002 for MPL switch with male luer connector S1101395 (output)
1 ea. small diameter PVC tubing S8808003 and reducer S4102164 to convert pneumatic test tubing to dehart switch
1 ea. test PVC tubing S8808002 with male luer connector (output) and quick disconnect S4103449 for connection to Narkomed 2 alarm channel

4.0. Calibration

The cm H_2O pressure gauge should be calibrated against a cm H_2O water column

4.1. Remove the gauge glass from the pressure gauge by carefully inserting a small screwdriver into the slot under the gauge glass rim on the bottom of the pressure gauge
4.2. Attach the pneumatic input tubing to the syringe and the input luer connector of the tester
4.3. Connect the pneumatic test tubing to the water column gauge and the output luer connector
4.4. Push syringe plunger until 10cm H_2O positive pressure is indicated on the water column gauge. The pressure gauge on the pressure switch tester should also indicate plus 10cm H_2O
4.5. Continue above procedure at 20, 30, 40, 50, 60, 70, and 80cm H_2O
4.6. The cm H_2O pressure gauge can be adjusted to the proper setting by turning the set screw on the bottom of the dial face (clockwise - positive; counterclockwise - negative)
4.7. It may be necessary to develope a conversion table for different pressures, if adjustment of set screw does not produce satisfactory results
4.8. Negative pressure can be created by drawing the syringe plunger

5.0. Operation of Pressure Switch Tester

NOTE:
The pressure switch tester (Fig. 1) must be operated in conjunction with PMS procedures 14.0 to 17.0 and service procedure 5.6.0.0.

Operation of Pressure Switch Tester

5.1. To use tester for checking alarm channel of NM2, NM2A or AM III

Attach test tubing with quick disconnect to female quick disconnect on NM2, NM2A or AM III alarm channel and to pneumatic output of tester. Connect syringe with input tubing to pneumatic input. Follow procedure 14.6 to 17.2 of the Preventive Maintenance Manual to test pressure functions of the alarm channel.

5.2. To use tester for checking individual MPL or dehart pressure switches

Attach test tubing with male luer connector to pneumatic output and MPL switch. Insert reducer with small diameter plastic tubing between test tubing and dehart pressure switch when testing dehart switches. Follow procedure 5.6.0.0. to determine proper function of pressure switch.

5.3. NOTE:
A multimeter, as described in procedure 5.6.1.8. and 5.6.4.6., is not required. Instead, test leads should be connected to pressure switch tester (Fig. 2). The Sonalert will be activated when electrical contacts of the pressure switch are closed.

5.4. The pressure in the system (positive or negative) can be eliminated by pressing the pressure release button (Fig. 1)

PRESSURE SWITCH TESTER

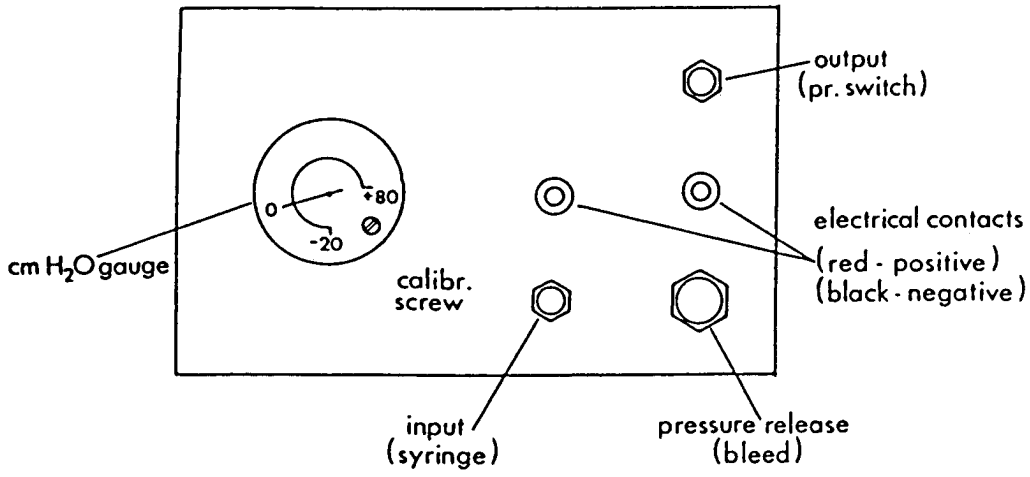

Figure 1

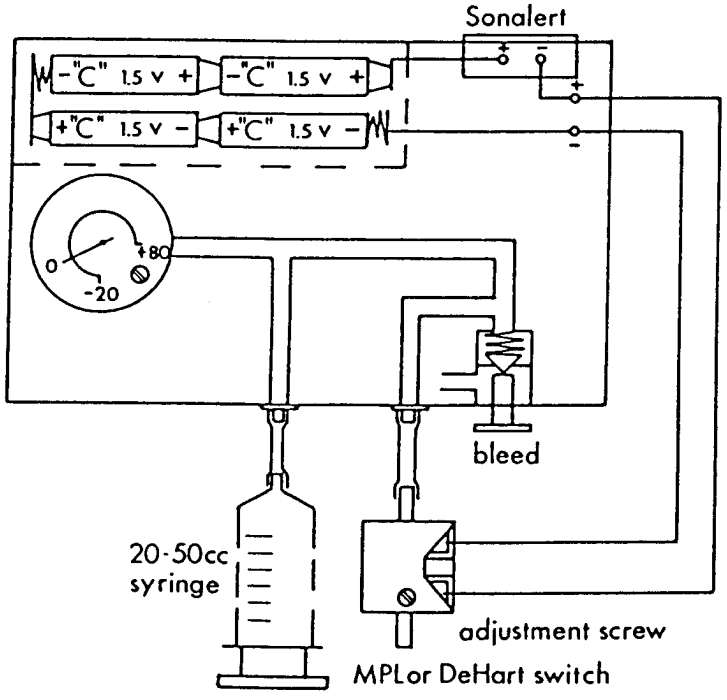

Figure 2

2.4. Oxygen Monitor

For Test Purposes, use a NAD/IL Monitor 4106158 A

2.5. Multimeter

North American Drager recommends the use of a Multimeter such as Radio Shack Model 22-191 for all electrical tests

2.6. Gas Analyzer

1.0. The gas analyzer is used to test vaporizer volume% concentration of anesthetic agents in 100% O_2

2.0. **Testing Vapor Concentrations**
See Vapor Vaporizer Test Procedure in Preventive Maintenance Section

2.7. Training Thorax

One or two Drager Training Thorax must be used to properly evaluate the anesthesia machine, anesthesia ventilator and patient breathing system.

2.8. Regulator Test Gauges
Oxygen Regulator Test Gauge S000063 A
Nitrous Oxide Regulator Test Gauge S000064 A

1.0. Regulator test gauges are used to determine the correct output pressure of the regulator. This is of particular importance when O.R.M. or O.R.M.c. devices are employed in the gas circuit

2.0. Following are the output pressures for oxygen and nitrous oxide regulators

At gas flow of 4 l/min:	O_2	N_2O
No O.R.M. or O.R.M.c.	40psi	40psi
O.R.M.	45psi	45psi
O.R.M.c.	48psi	45psi

3.0. All other regulators are set at 40psi

4.0. To determine the correct regulator output pressure (e.g. after the regulator was replaced) the following steps must be taken

5.0. Remove the table top

6.0. Locate the regulator to be tested by tracing the copper pipe from the yoke (oxygen or nitrous oxide) to the regulator

7.0. Downstream of the regulator low pressure side is a T-piece which contains a blind plug (Fig.1)

8.0. Before removing this blind plug make sure that all gas sources are turned OFF

9.0. Connect the correct test gauge to the T-piece

10.0. Remove the acorn nut of the regulator (Fig. 2)

11.0. Turn the appropriate cylinder ON. (If nitrous oxide regulator is tested the oxygen must also be ON)

12.0. Turn gas flow (oxygen or nitrous oxide) to 4 l/min on the flowmeter

13.0. By turning the set screw on the regulator clockwise or counterclockwise, the output pressure will decrease or increase (Fig. 2)

14.0. Set pressure to correct value as shown in point 2

15.0. Replace acorn nut and check that pressure does not vary

16.0. Turn cylinder OFF and drain system of residual gas

17.0. Turn flowmeter OFF and remove test gauge

18.0. Apply teflon tape to blind plug and replace

PRESSURE REDUCING REGULATOR

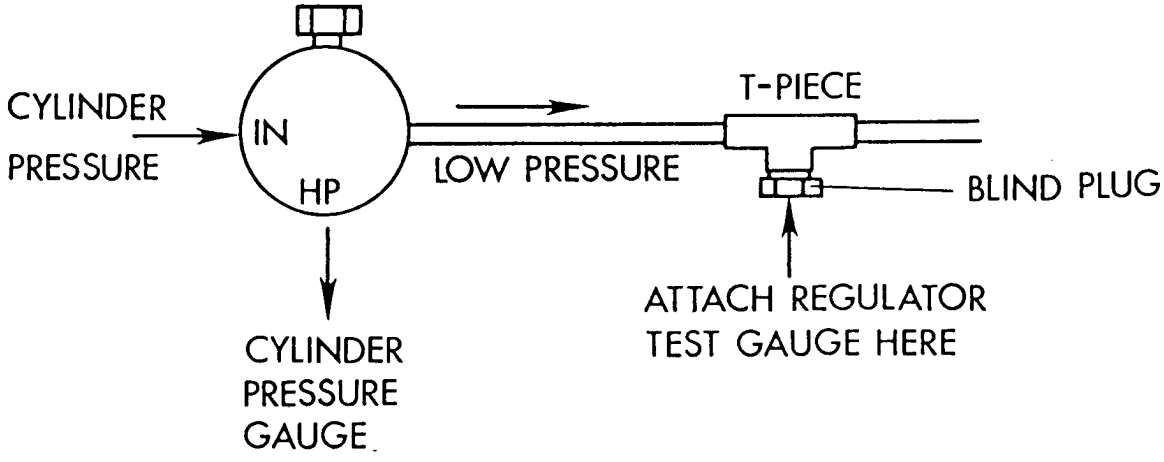

Figure 1

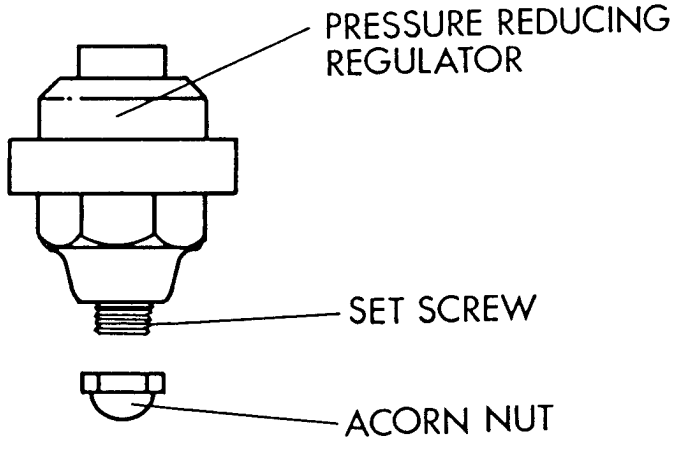

Figure 2

2.9. Pipeline Pressure Test Gauges
Oxygen Pipeline Pressure Test Gauge S000083 A
Nitrous Oxide Pipeline Pressure Test Gauge S000084 A

1.0. Pipeline pressure gauges are used to determine malfunctions in the hospital medical gas supply system

2.0. The pipeline pressure test gauge is connected between the medical gas supply hose (oxygen or nitrous oxide) and the DISS Inlet of the anesthesia machine

3.0. If, for example, pressure variations are detected in the oxygen supply system, the following procedure should be applied:

3.1. Connect the oxygen pipeline pressure test gauge as described in point 2
3.2. Turn all flowmeters and ventilators which are incorporated into the anesthesia machine OFF
3.3. Check and mark pipeline pressure as noted on test gauge
3.4. Activate oxygen flush button. See if and how much pressure drops
3.5. Turn ventilator on and see if and how much pressure drops during the inspiratory cycle
3.6. Turn oxygen flowmeter to 10 l/min and check for pressure drop

4.0. If the pressure drops more than 2psi when one or all of the above functions are activated the oxygen piping system is probably underated for normal consumption

2.10. Leak Detector

The TIF Leak Detector Model 5500 allows for convenient and fast determination of leaks in the anesthesia system

2.11. Test Terminal

A test terminal 4104389 A, coiled sphygmomanometer tubing 4103084 P and a sphygmomanometer bulb with a valve 5088010 A is needed to pressure test the absorber. Follow procedure 8.0. of the Preventive Maintenance section of this manual.

3.0. Tools

1.0. **Regular Tools**

- Box wrenches
- Allen wrenches
- Adjustable wrenches
- Combination pliers
- Needle nose pliers
- Wire cutters
- Screw drivers (flat)
- Small hammer

2.0. **Special Tools**

- Allen wrenches (10 or 12 inches long)
- Pipe bender (1/4" and 1/8")
- O.R.M. diaphragm wrench (NAD S000085 A)
- 3mm allen wrench for mounting Vapor Vaporizers

4.0. Supplies

1. Unbrako Loctite
2. Stop Cock Grease (S4105908 A)
3. Teflon Tape (1/4" or 1/2" wide)
4. Various sizes cable ties

Hospital Equipment Vigilance

Test Procedures and Specifications

1.0. Sphygmomanometer Test

1.1. Insert male Luer fitting of sphygmomanometer squeeze bulb-hose assembly into the female Luer fitting adjacent to the BLOOD PRESSURE label on the machine

1.2. Hand pump squeeze bulb until pressure of 200mm Hg is indicated on the sphygmomanometer gauge on the machine. Pinch hose adjacent to the Luer fitting to assure that the hose-bulb assembly is not the source of any leak

1.3. NOTE:
The decrease of pressure indicated at the sphygmomanometer gauge during the following 30 (thirty) seconds shall not exceed 10mm Hg

1.4. Attach test sphygmomanometer in series with unit to be tested. Both sphygmomanometers must have identical readings

2.0. VAPOR Exclusion System Test

2.1. Set handwheel on each VAPOR to 0 (zero) position

2.2. Adjust handwheel on Halothane VAPOR to any setting above 0 (zero) % volume concentration

2.3. With Halothane VAPOR set as above, it shall not be possible to adjust the handwheel on the Enflurane VAPOR or Isoflurane VAPOR

2.4. Set Halothane VAPOR handwheel to 0 (zero) position and repeat 2.2. and 2.3. with Enflurane VAPOR adjusted to any setting above 0 (zero) concentration. At this setting it shall not be possible to adjust the Halothane VAPOR

2.5. Repeat procedure 2.2. and 2.3. for Isoflurane VAPOR

2.6. NOTE:
On VAPOR 19.1 it is necessary to depress the white 0 (zero) button when setting control knob

2.7. Re-set all VAPORs to 0 (zero) position

3.0. High Pressure Test

3.1. NOTE:
Test to be performed with each gas independently

3.2. Set ON/OFF switch to OFF position (if applicable)

3.3. Close flow control valve

3.4. Open cylinder valve until indicated pressure at cylinder pressure gauge stabilizes

3.5. Close cylinder valve

3.6. NOTE:
The decrease of pressure indicated on the pressure gauge during the following 2 (two) minutes shall not exceed 50psi

High Pressure Test

NOTE:

3.7. Test must be repeated for gases with 2 (two) yokes by moving cylinder to second yoke and inserting yoke plug into yoke which has no cylinder

3.8. Check cylinder yokes for loose or missing yoke pins

4.0. Oxygen Supply Pressure Failure Protection Device

4.1. Set oxygen flow to 1.0 l/min

4.2. Set nitrous oxide flow to 1.0 l/min

4.3. Shut oxygen cylinder valve OFF if E-cylinder is source of pressure, or pipeline valve if pipeline is source of oxygen pressure

4.4. Nitrous oxide flow must cease when the flow of oxygen has stopped

4.5. Repeat test (steps 4.1. to 4.4.) for additional gas circuit(s) on the machine

4.6. Following step 4.4., when an oxygen supply pressure alarm is incorporated into the system, shutting OFF the oxygen shall actuate the alarm, when oxygen pressure drops below approximately 30 psi

5.0. NAD Oxygen Monitor

5.1. **NOTE:**
A **Daily Check List** is contained on a card located in the battery compartment of the unit

5.2. Check battery compartment for corrosion, check sensor cord for visible damage, check sensor cord electrical connectors

5.3. **NOTE:**
This test applies only to NARKOMED 2A equipped with Oxymed Monitor

5.4. Turn main switch ON

5.5. Remove sensor capsule from valve dome and expose to room air

5.6. Push 21% O_2 calibration button. Calibration should be completed in 45 (fourty-five) seconds

5.7. Place sensor into valve dome adapter and turn oxygen flow to 8 l/min

5.8. Monitor should display 100% O_2 within 15 (fifteen) seconds

5.9. Check alarms according to Oxymed Operator's Manual

6.0. Oxygen Concentration Test

6.1. This test specification applies to breathing systems with the oxygen sensor mounted into the inspiratory valve. The hose terminal at the inspiration valve must be open to atmosphere. A 22mm corrugated hose, at least 2 feet long, should be attached to the inspiratory valve

6.1.1. Turn oxygen monitor ON. Meter should read 21% O_2 at room air (the main switch must be turned ON when an Oxymed Monitor is used)

6.1.2. Close APL valve

Oxygen Concentration Test

6.1.3. Turn main switch ON (AM III and NARKOMED 2)

6.1.4. Adjust O_2 flow to 8 l/min

6.1.5. NOTE:
Oxygen meter shall indicate an O_2 concentration of approximately 100% (± 2%)

6.2. This test specification applies to breathing systems with the oxygen sensor mounted at a location other than in the inspiratory valve

6.2.1. Disconnect inspiratory hose

6.2.2. Place O_2 sensor in front of fresh gas outlet (common outlet)

6.2.3. Close APL valve

6.2.4. Turn main switch ON (if applicable)

6.2.5. Adjust O_2 flow to 8 l/min

6.2.6. NOTE:
Oxygen meter shall indicate an O_2 concentration of approximately 100% (± 2%)

6.3. **50% Oxygen, 50% Nitrous Oxide Flow Test**

6.3.1. Test set-up as 6.2.1. through 6.2.4. Adjust oxygen flow to 3 l/min and adjust nitrous oxide flow to 3 l/min. Oxygen monitor shall indicate 50% O_2 (± 2%)

7.0. Flowmeter Test

7.1. NOTE:
Adjust flow for each gas over the full range of its associated flowmeter(s). With an anesthesia machine supply pressure within the normal range, it shall be possible to adjust the flow over the full range of the flowmeter(s). The float within the flowmeter(s) shall freely move at all positions

8.0. Anesthesia Breathing System and Fresh Gas Delivery System Test

8.1. NOTE:
The below test specifications apply to an anesthesia breathing system without accessories, e.g., respiratory meter, filters, NARKOTEST-M, concentration measurement device, and other adapters. Test limits described below will be exceeded when accessory items are included in the test. The supplier of the accessory should be contacted for leak specifications

8.2. Close all flow control valves

8.3. Turn main switch OFF (if applicable)

8.4. Turn vaporizer(s) to 0 (zero) concentration

8.5. Short circuit inspiratory and expiratory valves with 22mm hose

8.6. Set manual/automatic selector valve to BAG (only applicable to NAD/AV Absorbers)

8.7. Close APL valve; knob must be turned fully clockwise to stop position

8.8. Attach test terminal to bag mount

8.9. Connect sphygmomanometer squeeze bulb to hose barb on test terminal

Anesthesia Breathing System and Fresh Gas Delivery System Test

NOTE:

8.10. Hand pump squeeze bulb until pressure at breathing system pressure gauge indicates pressure higher than 50cm H_2O, but not exceeding 80cm H_2O

8.11. Observe pressure drop at gauge

8.12. NOTE:
30 (thirty) seconds or longer, shall be required for a pressure decrease from 50 to 30cm H_2O

9.0. Vapor Selector Valve

9.1. If vapor selector valve is used instead of vapor exclusion system, tests 8.10. and 8.11. must be performed with vapor selector in each vapor position

9.2. Turn Halothane Vaporizer OFF. Switch vapor selector valve to Halothane Vaporizer position. Perform test 8.10.

9.3. Turn Halothane Vaporizer ON and set at any concentration above .4 volume %. Pressure will drop. Increase pressure to 50cm H_2O again

9.4. Turn vaporizer selector valve to Ethrane vaporizer position. Pressure will drop slightly and then remain constant. Set Ethrane vaporizer to any concentration. Pressure should remain constant

9.5. Repeat procedures 9.2. to 9.4. for Ethrane vaporizer

10.0. APL Valve Flow Test

10.1. NOTE:
The following test specifications apply only to absorber systems incorporating a manual/automatic selector valve

10.2. Set valve to BAG position

10.3. Short circuit inspiratory and expiratory valves with 22mm hose

10.4. Open APL valve; knob must be turned fully counterclockwise to stop position

10.5. Open O_2 flow control valve and set flow to 8 l/min

10.6. Occlude bag mount opening with thumb

10.7. Observe breathing system pressure gauge

10.8. NOTE:
Breathing system pressure gauge shall not exceed ~~2~~ 3 cm H_2O

11.0. Ventilator Test

11.1. Pressure Test (patient circuit with Y-piece required)

11.1.1. Turn main switch ON (if applicable)

11.1.2. Turn ventilator switch ON

11.1.3. Adjust O_2 flow to 3 l/min

11.1.4. Adjust frequency to 10 BPM (approximately on 6 BPM to 18 BPM gauge of pneumatic ventilator)

Ventilator Test

11.1.5. Set I:E ratio to 1:2 on AV-E (electronic ventilator)

11.1.6. Adjust tidal volume to approximately 1 (one) liter

11.1.7. Adjust flow to maximum of low zone

11.1.8. Switch manual/automatic selector valve to AUTO

11.1.9. Close 15mm outlet at Y-piece with thumb

11.1.10. Descending Bellows

System pressure gauge shall indicate a pressure in excess of 30cm H_2O when bellows stops its upward motion (NOTE: The bellows will not fully deflate) During the expiratory phase, downward movement of the bellows, the pressure in the system indicated on the pressure gauge shall decrease to approximately 2cm H_2O pressure when the bottom of the bellows reaches its resting position. The pressure in the system may drop below 0 (zero) momentarily before reaching its final condition

11.1.11. Ascending Bellows

System pressure gauge shall indicate a pressure in excess of 30cm H_2O when bellows stops its upward motion. (NOTE: The bellows will not fully inflate.) During the expiratory phase (upward movement of the bellows) the pressure in the system indicated on the pressure gauge shall decrease to approximately 2cm H_2O pressure when the top of the bellows reaches its resting position.

11.2. Inspiratory:Expiratory Ratio Test

11.2.1. Attach a test lung to Y-piece of patient breathing circuit

11.2.2. With ventilator operating as described in 11.1.1. through 11.1.7. adjust frequency to lowest indicated reading on BPM gauge, i.e.: 6 BPMon6 to 18 BPM ventilator, 10 BPM on 10 to 30 BPM ventilator (I:E ratio 1:2 and frequency 10 BPM on electronic ventilator)

11.2.3. Using a stopwatch, time the inspiratory phase of the respiratory cycle (start of inspiratory bellows movement to start of expiratory bellows movement) Record inspiratory phase time

11.2.4. Time the expiratory phase of the respiratory cycle (start of expiratory bellows movement to start of inspiratory bellows movement) Record expiratory phase time

11.2.5. Inspiratory to expiratory phase time shall be 1:2 ± 20% e.g. at 10 BPM the inspiratory time shall be 1.6 to 2.4 seconds, the expiratory time shall be 3.2 to 4.8 seconds

11.3. Frequency (BPM) Test

11.3.1. With ventilator operating as described in 11.2.1. and 11.2.2., measure time required for one respiratory cycle (start of inspiratory bellows movement to start of next inspiratory bellows movement) Lapsed time shall be within ± 20% of calculated time: e.g. at 10 BPM calculated time equals 6 (six) seconds, tolerance range is 4.8 seconds to 7.2 seconds

11.4. Frequency Divider Test (if applicable)

11.4.1. With ventilator operating as described in 11.2.1. and 11.2.2., set ⅓ BPM switch to ⅓ BPM position

11.4.2. Measure respiratory time as described in 11.3.1. Total time shall be 3 (three) times that indicated in test step 11.3.1. with the same ± 20% tolerance

12.0. Flow Direction Test

12.1. This test specification applies to systems incorporating a ventilator and breathing system with a manual/automatic selector valve

Flow Direction Test

12.1.1. Set manual/automatic selector valve to BAG position

12.1.2. Attach bag to bag connection

12.1.3. Connect ventilator hose at Y-piece

12.1.4. Open APL valve

12.1.5. Open O_2 flow control valve and adjust flow to 3 l/min

12.1.6. Turn ventilator ON

12.1.7. Set frequency to 16 BPM

12.1.8. Set tidal volume approximately 700ml

12.1.9. Adjust ventilator inspiratory flow so that tidal volume is fully delivered within inspiratory phase time

12.1.10. NOTE:
The pressure on the breathing system pressure gauge shall neither exceed + 2cm H_2O during the expiratory phase nor go below -2cm H_2O during the inspiratory phase

12.2. This test specification applies to systems incorporating a ventilator but a breathing system with no manual/automatic selector valve

12.2.1. Connect bag to bag terminal

12.2.2. Connect ventilator hose to Y-piece

12.2.3. Proceed with 12.1.3. to end of test (above)

12.3. This test specification applies to systems not incorporating a ventilator

12.3.1. Connect resuscitator bag or bellows to Y-piece

12.3.2. Open APL valve

12.3.3. Open O_2 flow control valve and adjust flow to 3 l/min

12.3.4. Occlude air intake valve (if existing) of the bag or bellows

12.3.5. Hand squeeze resuscitator bag or bellows in the frequency of normal breathing (about 10 BPM), generating a tidal volume of approximately 700cc

12.3.6. NOTE:
Test results as described under 12.1. shall be obtained

12.3.7. NOTE:
Test procedure 12.3.1. may be performed using the ventilator of another machine in place of resuscitator bag or bellows if another machine with ventilator is available

13.0. Alarm Circuit Delay Test (where applicable)

13.1. Turn main switch of machine ON. Immediately upon turning on the main switch, the audible alarm delay function will start; it will continue for 30 (thirty) ± 5 seconds. The yellow LED, adjacent to the Sonalert alarm on the alarm panel of the machine, will be actuated during the 30 (thirty) ± 5 second delay cycle

13.2. Upon completion of the audible alarm delay described in 13.1., test the function of the manually actuated delay. The manual audible alarm delay is operated by actuating the push-button located

Alarm Circuit Delay Test (where applicable)

13.2. adjacent to the yellow LED on the alarm panel. The manual delay is also 30 (thirty) ± 5 seconds in duration and includes the LED function described in 13.1.

13.3. NOTE:
Alarm functions that occur during the course of the audible alarm delay operation are indicated by red LEDs on the alarm panel. These LEDs will continue to operate at any time that an alarm condition exists regardless of the delay. The yellow LED remaining ON after 30 (thirty) ± 3 seconds of delay is an indication of malfunction of the delay circuit in the DELAY ON mode and must be investigated

13.4. NOTE:
Actuation of the high pressure and sub-atmospheric LEDs simultaneously is indication of a system failure detected by the alarm logic circuit. This requires testing of individual pressure switches (See Service Procedure 5.6.0.0.)

13.5. NOTE:
For battery test on NARKOMED 2A follow point 23.0.13.

14.0. Ventilation Pressure Monitor (DPM II & DPM-S Test)

14.1. NOTE:
The following test specifications apply to ventilation pressure monitors incorporated into NAD Anesthesia Machines; the oxygen cylinder must be closed and the oxygen pipeline supply disconnected. The oxygen low pressure alarm will be actuated and the LEDs will oscillate during the test after the main switch has been turned ON - Restore oxygen supply pressure

14.2. The following procedures (14.2. to 17.5.) can also be performed with NAD pressure switch tester (4105465 A)

14.3. Short circuit inspiratory and expiratory valves with 22mm hose and set manual/automatic selector valve to BAG

14.4. Close APL valve

14.5. Attach test terminal to bag mount

14.6. Connect sphygmomanometer squeeze bulb to hose barb on test terminal

14.7. Turn audible alarm OFF (applicable only to NARKOMED 2, NARKOMED 2A and AM III)

14.8. Turn main switch of anesthesia machine ON (applicable only to NARKOMED 2, NARKOMED 2A and AM III)

14.9. Turn ventilator switch ON (applicable only to DRAGER AV & AV-E anesthesia ventilators in NARKOMED 2, NARKOMED 2A and AM III and interfaced on DPM & DPM-S on NARKOMED STANDARD)

14.10. Turn on monitor switch (applicable to monitors which are not integral parts of anesthesia machine, e.g. interfaced to NARKOMED STANDARD)

14.11. NOTE:
Following step 14.8. or 14.9., the ventilation pressure monitor alarm shall be actuated; audible and visual alarms cannot be silenced

Ventilation Pressure Monitor (DPM II & DPM-S Test)

NOTE:

14.12. Adjust pressure selector switch to lowest setting (5, 7.5, or 8cm H_2O)

14.13. Hand pump squeeze bulb until breathing pressure gauge indicates 10cm H_2O; alarm shall be silenced

14.14. Open relief valve at squeeze bulb to allow system pressure to decrease to 0 (zero)

14.15. NOTE:
The alarm will be reactuated 15 seconds (± 4.5 seconds) after the system pressure has decreased below the pressure set at the selector switch

14.16. Adjust pressure selector switch to 12.5. or 12cm H_2O

14.17. Repeat steps 14.11. and 14.12. Pressurize to 15cm H_2O

14.18. Adjust pressure selector switch to 25 or 26cm H_2O

14.19. Repeat steps 14.11. and 14.12. Pressurize to 30cm H_2O

14.20. Set ventilator ON/OFF switch (electronic ventilators only) to 60 (sixty) second alarm delay position. Alarm shall be delayed for 1 (one) minute

15.0. Continuing Pressure Monitor Alarm Test (if applicable)

15.1. Test set-up is as described under 14.0 Ventilation Pressure Monitor Test

15.2. Hand pump squeeze bulb until breathing pressure gauge indicates 20cm H_2O (20cm H_2O on DPM-S and NARKOMED 2A)

15.3. NOTE:
Maintaining this pressure, the alarm shall be actuated after a period of 10 (ten) seconds
3 seconds

16.0. High Pressure Monitor Alarm Test

16.1. Test set-up is as described under 14.0 Ventilation Pressure Monitor Test

16.2. Hand pump squeeze bulb until breathing pressure gauge indicates 65 to 70cm H_2O; the high pressure alarm shall be actuated

16.3. NOTE:
During this test, the Continuing Pressure Monitor Alarm may be actuated if a pressure higher than 12.5cm H_2O, respectively 15 or 18cm H_2O, is maintained in the system for a period longer than 10 (ten) seconds

17.0. Sub-Atmospheric Pressure Monitor Alarm Test

17.1. Test set-up is as described under 14.0 Ventilation Pressure Monitor Test, however, the squeeze bulb is connected directly to the test terminal, eliminating spiral hose and bleed valve at bulb

17.2. Open APL valve

17.3. Hand squeeze bulb, engage in squeezed condition

17.4. Occlude intake port of bulb with thumb

Sub-Atmospheric Pressure Monitor Alarm Test

17.5. Release bulb quickly

17.6. NOTE:
The pressure in the system shall drop below -10cm H_2O for an instant and actuate the sub-atmospheric alarm; if this result is impossible to obtain, other means shall be applied, e.g. using a large syringe, or NAD pressure switch tester

18.0. Oxygen Ratio Monitor Alarm Test

18.1. Turn main switch ON (applicable only to NARKOMED 2, NARKOMED 2A and AM III)

18.2. Turn monitor switch ON (applicable only to monitors which are not integral parts of an anesthesia machine, e.g. attached to NARKOMED STANDARD or NARKOMED COMPACT)

18.3. Set N_2O flow to 3.5 l/min

18.4. Adjust O_2 flow to 500cc/min flow

18.5. Increase O_2 flow

18.6. NOTE:
The oxygen ratio monitor alarm shall be silenced with an oxygen flow of 950cc/min to 1.2 l/min (See also procedure 3.3.0.0.)

19.0. O.R.M.c. Test (Oxygen Ratio Monitor Control)

19.1. Open pipeline supply valves for oxygen and nitrous oxide

19.2. Attach oxygen monitor sensor to adapter on inspiratory valve; attch 22mm breathing hose to inspiratory valve port

19.3. Set stick shift lever on manual/automatic selector valve to BAG position (applicable only on machines with NAD/AV absorber)

19.4. Close APL valve

19.5. Turn main switch of machine ON

19.6. Open oxygen flow control valve; set flow to 0.8 l/min

19.7. Open nitrous oxide flow control fully to stop position (dont't force flow control valve)

19.8. With conditions as described in 19.6. and 19.7., the oxygen monitor shall indicate 28 ± 3% oxygen

19.9. Repeat steps 19.6 and 19.7. with oxygen flow set at 1.5 l/min and 3.5 l/min respectively. Oxygen monitor reading shall continue as described in 19.8.

19.10. Decrease oxygen flow to 0.8 l/min, nitrous oxide flow shall decrease accordingly maintaining the 28 ± 3% reading indicated in 19.8. (see also procedure 3.10.0.41.)

20.0. Scavenger Interface Maintenance

20.1. Remove cap of negative pressure relief valve

20.2. With needle-nose pliers, carefully remove valve disc assembly by turning counterclockwise

Scavenger Interface Maintenance

20.3. NOTE:
Do not puncture or bend disc with tips of pliers

20.4. Carefully remove lint and dirt from valve disc assembly by using a small brush

20.5. Blow residual dust from disc and spring with a low flow of air (not to exceed 5 l/min at 50 psi)

20.6. Be careful not to change spring tension while cleaning disc assembly

20.7. Install valve disc assembly in scavenger interface housing by turning clockwise

20.8. Install cap

20.9. Repeat procedure for positive pressure relief valve and second negative pressure valve (applicable only on scavenger interface with 3 [three] valves)

21.0. Accessory Attachment

21.1. Attach each accessory item to its intended location. Reject any item which cannot be properly attached

22.0. Visual Inspection

22.1. Inspect all surfaces of the equipment. Replace labels, foot pads, or other damaged parts as necessary

23.0. Chassis Isolation and Battery Test (applies only for NARKOMED 2A)

23.0.1. Test Equipment Micronta Multimeter 22-191 (Radio Shack) or equivalent

23.0.2. Chassis Voltage Test (Set Multimeter to 20 VDC)

23.0.3. Disconnect hospital medical gas supply, turn all E-cylinders OFF and depressurize anesthesia system

23.0.4. Plug power cord into 117 VAC electric outlet

23.0.5. Turn N_2O/Air selector switch to N_2O position (when applicable)

23.0.6. Turn main switch ON

23.0.7. Turn ventilator switch ON

23.0.8. Turn flowmeter lights ON (when applicable)

23.0.9. Turn all NAD monitors ON which are directly connected to the power supply (when applicable)

23.0.10. Connect the Multimeter negative probe (black) to pin 2 (signal ground) and the positive probe (red) to pin 3 (positive lead) of the Oxymed Power Outlet. The Multimeter must indicate between 9 VDC and 13.5 VDC (see schematic SKOB032)

23.0.11. Leave the negative probe of the Multimeter connected to pin 2 and connect positive probe to pin 1 of Oxymed Power Outlet. The Multimeter must indicate 0.0 VDC

23.0.12. Turn ventilator switch to 60 (sixty) seconds delay and repeat procedures 23.0.10. and 23.0.11.

23.0.13. Remove power cord from 117 VDC electric outlet and check if yellow LED for reserve power is activated (a short beep must be audible once every minute)

23.0.14. Repeat procedures 23.0.10. and 23.0.11.

Chassis Isolation and Battery Test (applies only for NARKOMED 2A)

23.0.15. On NARKOMED 2A equipped with O.R.M.c., turn oxygen and nitrous oxide ON and create an alarm condition

23.0.16. Repeat procedures 23.0.10. and 23.0.11.-Remove probes.

23.1.1. Chassis Ground to Signal Ground Continuity Test (Set Multimeter to 200 Ohms full scale)

23.1.2. Turn main switch OFF. **Do not** connect power cord to 117 VAC electric outlet

23.1.3. Connect 1 (one) probe of the Multimeter of pin 1 (chassis ground) of the Oxymed Power Outlet and the other probe to the ground pin (green) of the electric plug of the power cord. The Multimeter must indicate continuity between these 2 (two) points

23.1.4. Connect 1 (one) probe of the Multimeter to pin 1 of Oxymed Power Outlet and the other probe to pin 2. There shall be no continuity between these 2 (two) points

23.1.5. Remove Multimeter probes, turn flowmeter lights, ventilator, monitors and main switch OFF

23.1.6. Check battery power

23.1.7. Purge anesthesia system and activate oxygen flush button for 2 - 3 seconds

23.1.8. NOTE:
If the chassis voltage and continuity tests should not be satisfactory, refer to procedure 5.7.0.0. for Trouble Shooting

23.2. Battery Test (applies only to NARKOMED 2)

23.2.1. Turn main switch ON

23.2.2. Push battery test button. The green LED next to the battery test button must light up

23.2.3. NOTE:
If green LED cannot be activated, replace 6 VDC battery located in the battery compartment in the rear of the machine

24.0. Oxygen Flush

24.1. Purge system of all gases except oxygen

24.2. Actuate the oxygen flush by pressing the **O_2 Flush** button on the left front edge of the table top. The oxygen flush delivers an unmetered flow of oxygen direct to the common outlet. Releasing the **O_2 Flush** button must immediately shut OFF this flow

24.3. Attach a volumeter to the fresh gas outlet and press the **O_2 Flush** button. At 50 psi line pressure the oxygen flow should be approximately 50 l/min

24.4. Test oxygen concentration at inspiratory valve with oxygen monitor

24.5. NOTE:
Oxygen concentration must be 100%

24.6. Turn all controls and switch to OFF position

VAPOR VAPORIZER TEST PROCEDURE

1.0. Calibration Verification of North American Drager Vapor Vaporizers

1.1. NOTE:
Recommended Analyzer: **Riken Portable Gas Analyzer Model 18**

1.2. Test Procedure

1.3. Before testing Vapor vaporizers, the following steps must be observed

1.3.1. Check that Vapor vaporizers were exposed to a constant temperature (preferably 22° C) for at least 1 (one) hour

1.3.2. Vaporizer must be turned OFF

1.3.3. Fill vaporizer with correct anesthetic until liquid level can be noticed above the minimum liquid level indicator

1.3.4. Turn all gases OFF

1.3.5. Turn oxygen flow to 10 l/min to flush entire system of residual gases

1.3.6. Reduce oxygen flow to 4 l/min

1.4. Calibrate gas analyzer as per manufacturer's instructions

1.5. Purge analyzer thoroughly of residual gases and anesthetic agents

1.6. Connect sampling T between common outlet and fresh gas hose

1.7. Slowly adjust Vapor vaporizer to be tested to 1.0 volume % concentration and wait 5 (five) minutes before testing

1.8. NOTE:
Be careful not to exceed the 1.0 volume % concentration calibration mark. If the handwheel is turned pass the 1.0 volume % mark, return handwheel to correct setting and wait for at least 10 (ten) minutes before checking the calibration

1.9. Slowly turn handwheel to 2.5 volume % concentration. Follow procedure 1.7. for 2.5 volume % concentration

1.10. Slowly turn handwheel to 4.0 volume % concentration. Follow procedure 1.7. for 4.0 volume % concentration

1.11. Turn vaporizer OFF and purge analyzer thoroughly before testing the next Vapor vaporizer

1.12. NOTE:
Never test a Vapor vaporizer by starting with high volume % concentrations and then decrease to lower settings

2.0. Tolerances

Halothane: ±10%
Enflurane: ±15%
Isoflurane: ±15% of respective volume % concentration setting

2.1. An additional 5% variation must be considered because of the gas analyzer's own tolerance

3.0. Conversion Factors (for Riken Gas Analyzer)

Halothane x 1.0
Enflurane x 1.08
Isoflurane x 1.07

4.0. Repeating Calibration Verification Tests

4.1. **It is important that all calibration verification tests are performed under the same identical conditions as previous tests.** Different vaporizer temperatures, handwheel settings, waiting periods between readings, gas analyzers and even different persons performing the calibration verifications tests will greatly effect the final test results

4.2. NOTE:
It is very important to detect gradual increases or decreases of volume % output from one test to the next, provided that identical test conditions were established

4.3. If a Vapor vaporizer shows a gradual increase or decrease in volume % output over a series of calibration verification tests, the Vapor vaporizer should be returned to North American Drager for a general overhaul. A statement describing the problem must accompany the unit

5.0. Transport of Vapor vaporizer

5.1. Before removing the vaporizer from the mount, the following procedure must be followed

5.1.1. Drain vaporizer completely

5.1.2. Remove filler and drain plugs

5.1.3. Turn handwheel to maximum concentration setting

5.1.4. Turn oxygen flow to 10 l/min for at least 20 (twenty) minutes

5.1.5. NOTE:
This procedure must be performed in a well ventilated area without personnel present

5.1.6. Turn handwheel to 0 (zero) and replace filler and drain plugs

5.1.7. Turn oxygen flow OFF

5.1.8. Remove Vapor vaporizer from mount

5.2. Package vaporizer very carefully for shipment

3.0. Conversions

3.1. Oxygen Concentrations at Various Oxygen/Air Flow Ratios

$$\frac{\text{Air l/min} \times 21 + O_2\ \text{l/min} \times 100}{\text{Total Liter Flow}} = \%O_2$$

OXYGEN L/MIN	AIR L/MIN	PER CENT OXYGEN CONC
.3	10.0	23.3%
.5	10.0	24.8%
.8	10.0	26.9%
1.0	10.0	28.2%
2.0	10.0	34.2%
3.0	10.0	39.2%
4.0	10.0	43.6%
5.0	10.0	47.3%
6.0	10.0	50.6%
7.0	10.0	53.5%
8.0	10.0	56.1%
9.0	10.0	58.4%
10.0	10.0	60.5%
1.0	1.0	60.5%
1.0	2.0	47.3%
1.0	3.0	40.8%
1.0	4.0	36.8%
2.0	1.0	73.6%
2.0	2.0	60.5%
2.0	3.0	52.6%
3.0	1.0	80.3%
3.0	2.0	68.4%
3.0	3.0	60.5%

3.2. Conversion Factors

1atm = 1033cm H_2O = 760mm Hg = 760 Torr = 1013 mb = 14.7psi
1psi = 70.3cm H_2O = 51.7mm Hg = 68.9 mn = 6.9 kPa
1mm Hg = 1.36cm H_2O = 1.02 mb
1cm H_2O = 0.736mm Hg = 0.981 mb

OPERATING PRINCIPLES OF ANESTHESIA AND RELATED EQUIPMENT

OPERATING PRINCIPLES
Table of Contents

THEORY OF OPERATION

Introduction

The following sections explain in detail the theory of operation of individual pneumatic components as well as the entire pneumatic system of the North American Drager NARKOMED 2 and NARKOMED 2A Anesthesia Systems.

Many of the working principles described in the following chapters apply also to other similar anesthesia and respiratory equipment.

The piping diagrams show the basic operating principle and may vary from equipment to equipment, depending on manufacturer's design, production modifications, changes of equipment standards or customer's preference.

FLOW CONTROL VALVE

(Needle Valve)

FLOW CONTROL (NEEDLE VALVE)

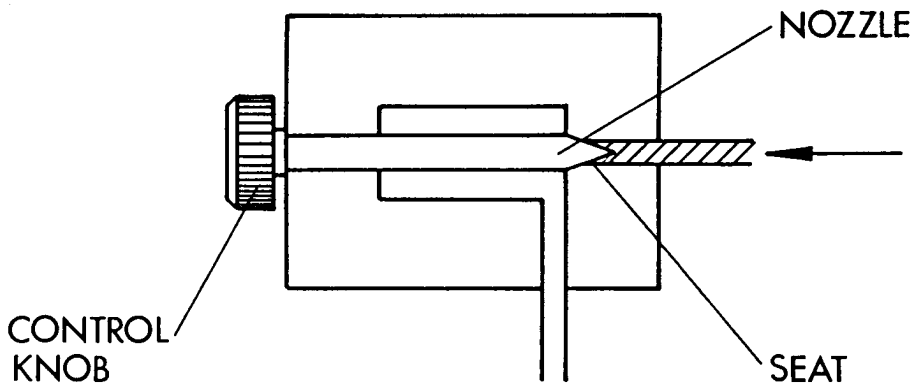

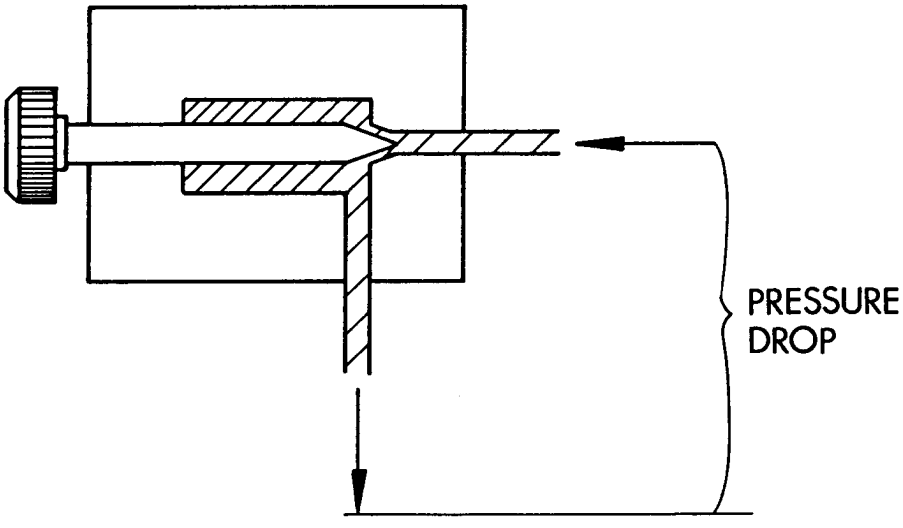

FLOW CONTROL (NEEDLE VALVE)

The flow control or needle valve is a precision machined device, which controls the gas flow through a variable size orifice. While the seat is stationary, the nozzle can be moved by turning the flow control knob. The farther the distance between nozzle and seat the higher the gas flow down stream of the valve. The smaller the distance the lower the gas flow. When the control knob is completely turned clockwise the nozzle will be pressed against the seat and the gas flow will stop.

A pressure drop occurs across the seat/nozzle assembly, or in other words, between the upstream and the downstream side of the valve. If the downstream port of the valve is occluded, the gas flow will stop and the pressure downstream of the seat/nozzle assembly will be the same as upstream.

PRESSURE REDUCING REGULATOR

PRESSURE REDUCING REGULATOR

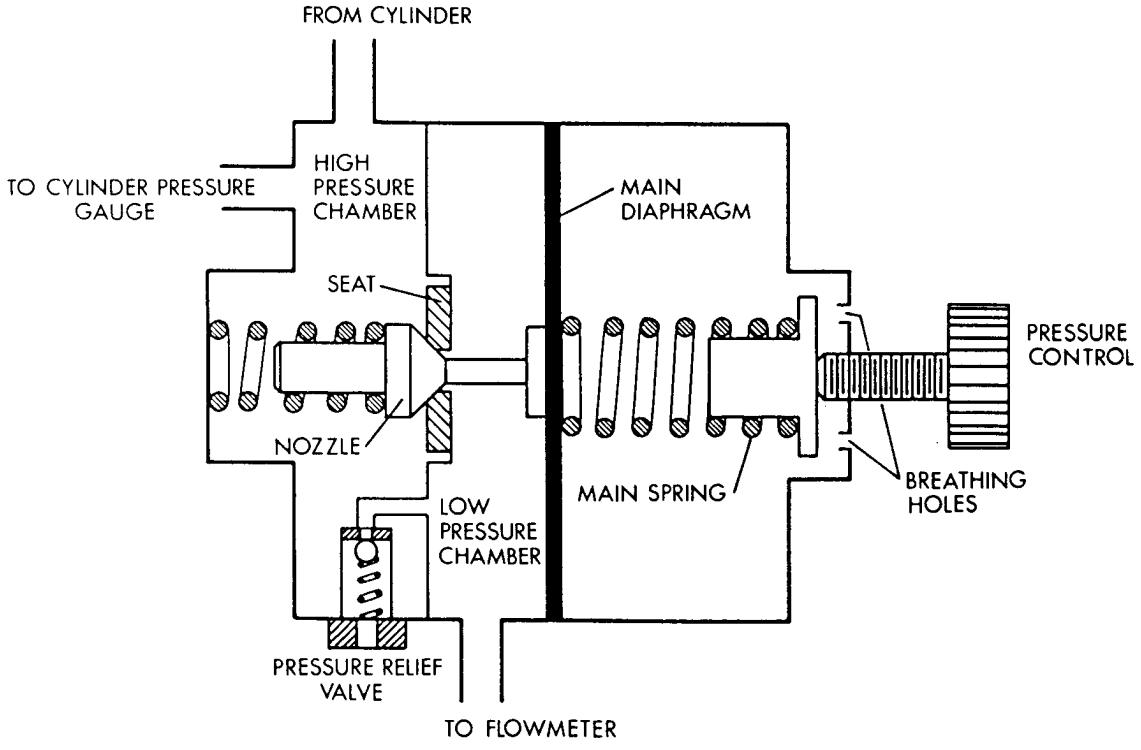

PRESSURE REDUCING REGULATOR

The pressure reducing regulator is a device which decreases a high pressure (e.g. 2000 psi) to a relatively low operating pressure (e.g. 50 psi)

The single stage regulator which is the simplest and most commonly used regulator in anesthesia equipment is divided into 2 (two) sections:

1. The high pressure chamber which contains the seat and nozzle assembly.
2. The low pressure chamber which is seperated by a diaphragm from the main spring and the pressure control knob.

The diaphragm and nozzle are connected with each other in such a manner that all motions of the nozzle are synchronized with the diaphragm.

The design of the seat/nozzle assembly determines the maximum gas flow which may be obtained at any given pressure setting.

A preset pressure relief valve will prevent a pressure build-up in the low pressure chamber in case gas leakage is caused by a faulty seat/nozzle assembly while the regulator is turned OFF.

The breathing holes allow for free air movement between the atmosphere and the regulator housing to maintain ambient pressure independent from the position of the diaphragm.

Pressure gauges are usually utilized on the high and low pressure sides of the regulator. The high pressure gauge (cylinder pressure) shows the regulator input pressure while the low pressure gauge is used to determine the desired regulator output pressure. Many single stage pressure reducing regulators are preset by the manufacturer to a predetermined output pressure and do not require a low pressure gauge.

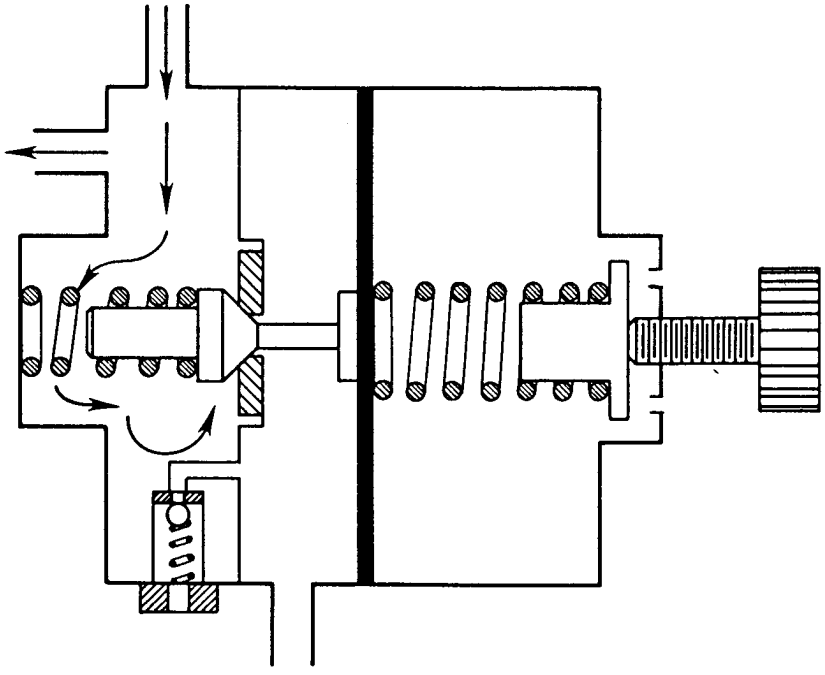

high pressure

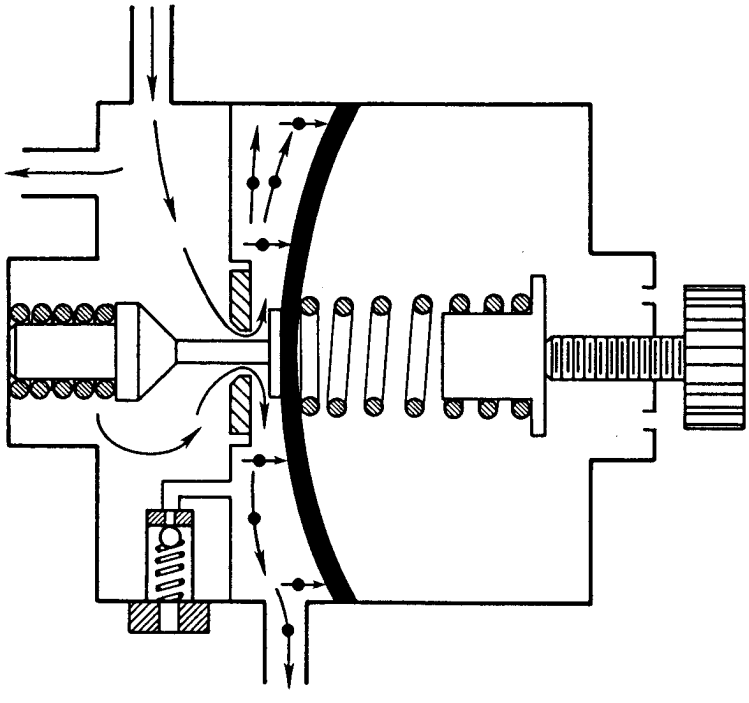

high pressure

low pressure (controlled)

With the regulator control in the OFF position (pressure control turned counterclockwise) the pressure reducing regulator is connected to a high pressure gas source (e.g. 2000 psi). The high pressure gas enters the high pressure chamber and high pressure gauge. Since the main spring is relaxed, no pressure is applied on the diaphragm. The nozzle is therefore pressed against the seat and gas is prevented from entering the low pressure chamber.

As the regulator control is turned ON (pressure control being turned clockwise) pressure is applied against the diaphragm which forces the nozzle away from the seat. Gas can now enter the low pressure chamber, where the pressure begins to increase.

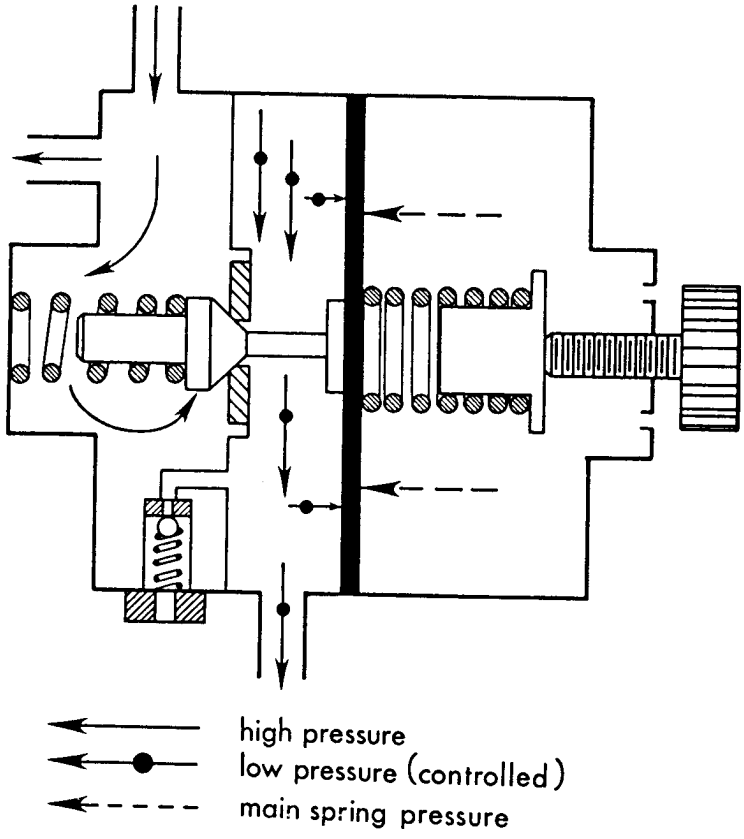
high pressure
low pressure (controlled)
main spring pressure

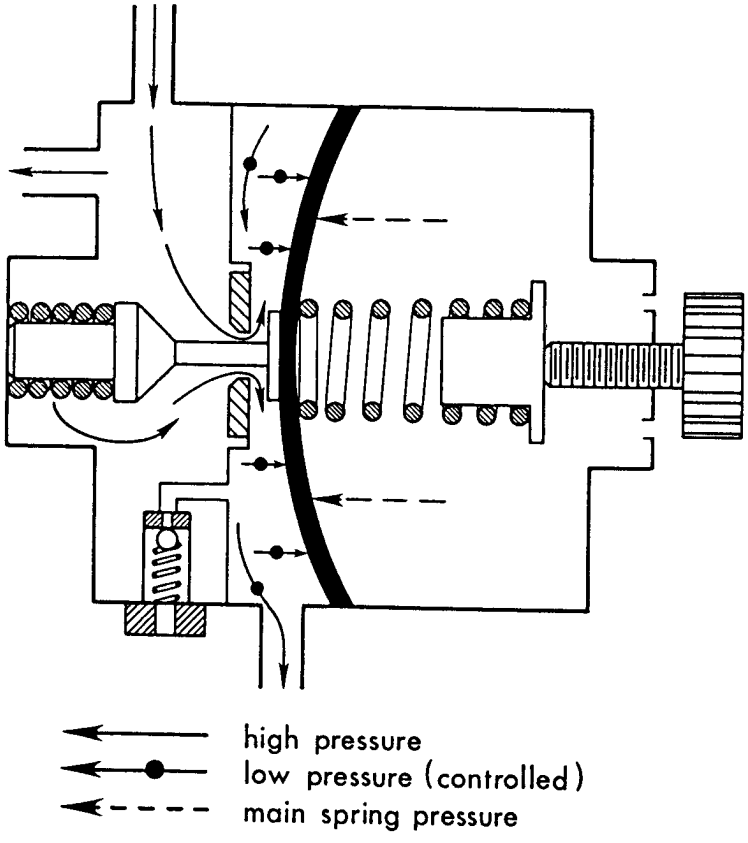
high pressure
low pressure (controlled)
main spring pressure

The pressure increase in the low pressure chamber will force the diaphragm into the opposite direction which results in the compression of the main spring. During this process, the nozzle is gradually moving towards the seat which reduces the gas flow into the low pressure chamber. Once the gas pressure in the low pressure chamber is equal to the pressure of the main spring, the diaphragm is flat again and the nozzle is pressed against the seat which prevents more gas from entering the low pressure chamber.

As gas is leaving the low pressure chamber to activate the appropriate appliance (e.g. flowmeter), the pressure in the low pressure chamber begins to drop. This allows the main spring to force the diaphragm towards the low pressure chamber which also opens the seat/nozzle assembly. Gas can again enter the low pressure chamber and the entire process as described in this chapter is repeated.

NOTE: It is important to select the correct regulator for a given appliance. Not only must the regulator provide the required low pressure but also contain a seat/nozzle assembly which is capable of supplying gas flows in excess of total gas flow requirements.

CENTRAL MEDICAL GAS SUPPLY

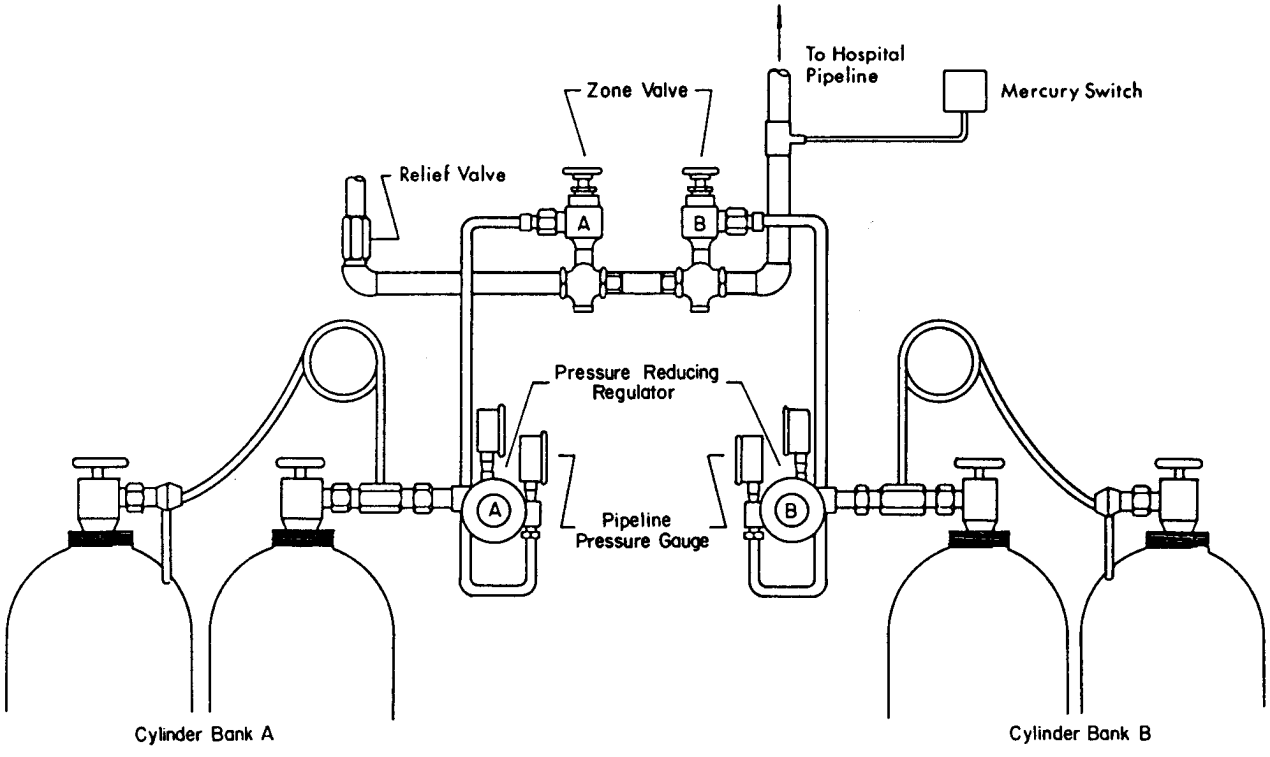
To Hospital
Pipeline
Mercury Switch
Zone Valve
Relief Valve
A
B
Pressure Reducing
Regulator
Pipeline
Pressure Gauge
Cylinder Bank A
Cylinder Bank B

CENTRAL MEDICAL GAS SUPPLY

In most hospitals, medical gases are supplied to various locations via a central piping system.

The medical gas source may consist of a cryostat, pressure vessels mounted on a trailer or cylinders manifolded together, depending on the type of gas and individual requirements.

The gas source described in this section is a combination of 2 (two) cylinder banks which must be adjusted manually. This type of manifold system is frequently used for emergency oxygen supply in conjunction with a cryostat. It may also be used as the primary supply source for nitrous oxide, nitrogen and air.

The gas source consists of 2 (two) banks of cylinders, which are connected parallel within each bank. The operating or pipeline pressure of each bank is controlled by a pressure reducing regulator. Zone valves allow for individual isolation of each bank from the piping system. Should a pressure reducing regulator malfunction, a relief valve will protect the piping system from excessive pressure by discharging the gas into the atmosphere. Pressure reductions below normal operating level (50 to 55 psi) may be caused by the depletion of cylinder gas or a leak in the piping system. An alarm is activated by a mercury switch to alert the consumer.

NOTE: It is imperative that the pipeline system is designed to accomodate maximum gas consumption without a pressure reduction below normal operating level.

For example: If in the operating room area the piping system is underrated (piping diameter is too small), the activation of the oxygen flush valve on an anesthesia machine may cause an excessive pressure drop. This may result in a noticable decrease of the oxygen flowrate and/or the cessation of pneumatically operated ventilators.

NOTE: The pipeline pressure must never drop more than 2 psi on any service station during peak consumption.

NOTE:: If pipeline pressure is set below the output pressure of the pressure reducing regulator in the anesthesia machine, gas will be drawn from the reserve cylinder instead of the pipeline system.

CYLINDER MANIFOLD

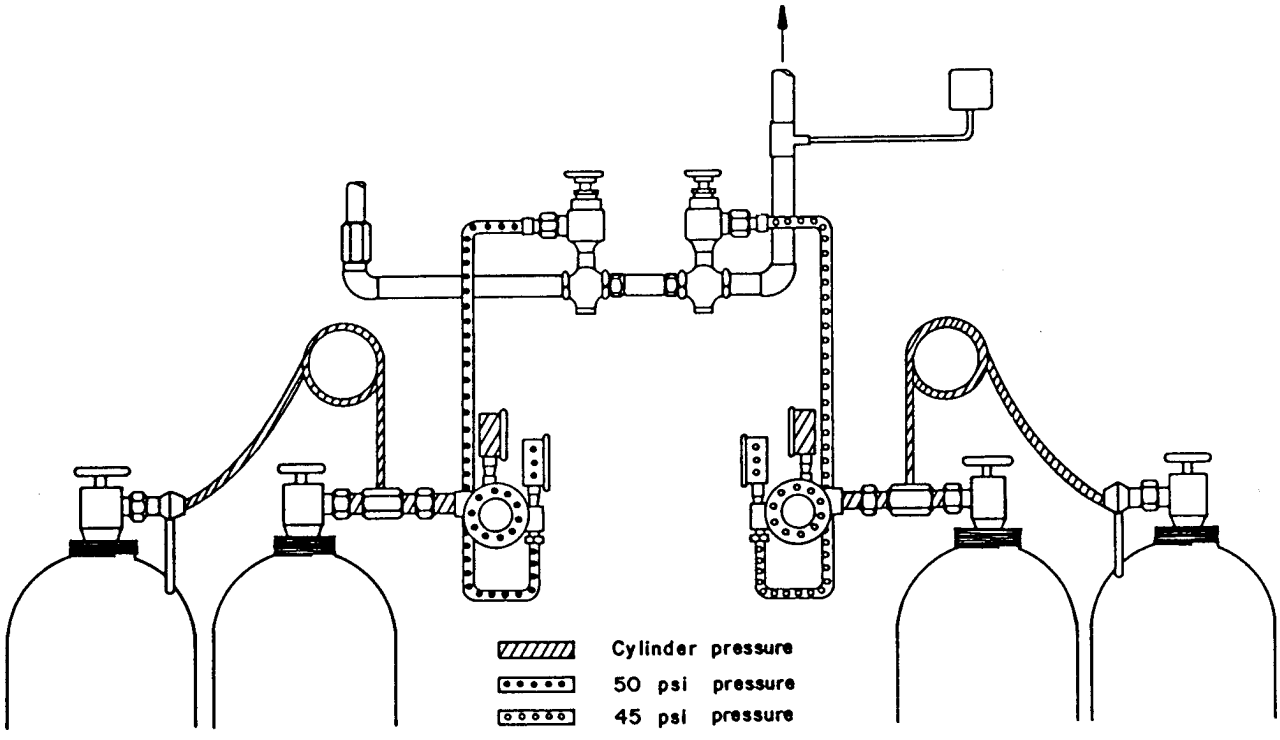

CYLINDER MANIFOLD

Both cylinder banks are activated. All cylinder valves are turned ON. The pressure reducing regulator (A) of the left cylinder bank (A) is set at 50 psi while the zone valve (A) is closed.

The pressure reducing regulator (B) of the right cylinder bank (B) is set at 45 psi. The corresponding zone valve (B) is closed.

The bank set at the higher pipeline pressure (50 psi) will serve as the **active** bank, while the bank set at the lower pipeline pressure (45 psi) will be the **stand-by** bank.

Gas cannot enter the hospital pipeline as long as both zone valves remain closed.

CYLINDER MANIFOLD

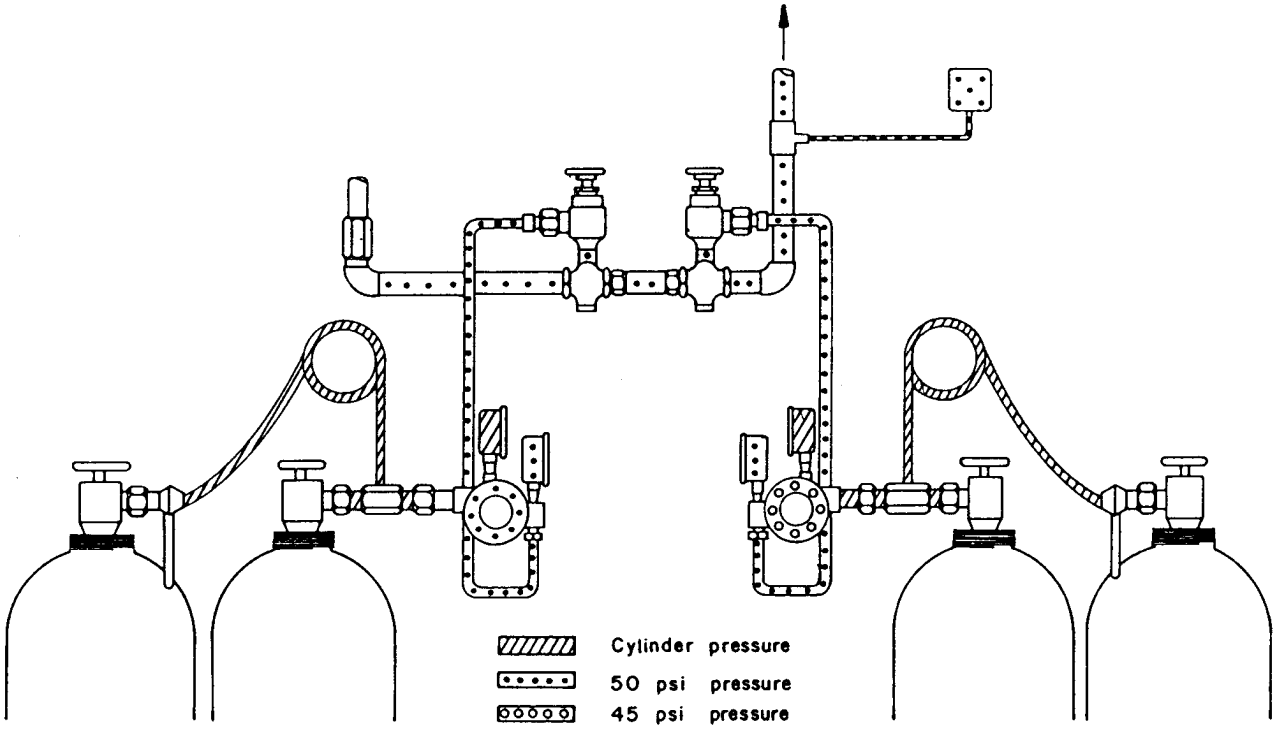

CYLINDER MANIFOLD

After the zone valve (A) of the left cylinder bank (A) is opened the pipeline system is charged with gas at 50 psi pressure.

When the zone valve (B) of the right cylinder bank (B) is opened, the pressure in the entire hospital piping system will be 50 psi pressure.

The pressure between the pressure reducing regulator (B) and the zone valve (B) of the stand-by bank (B) will also increase to 50 psi.

Both pipeline pressure gauges (A and B) will now read 50 psi pipeline pressure.

Gas is drawn from the left (active) cylinder bank (A), since it was adjusted to a higher pressure (50 psi) than the right (stand-by) cylinder bank (B) at 45 psi.

Gas will be drawn from the active bank (A) until the cylinder pressure falls to 45 psi.

CYLINDER MANIFOLD

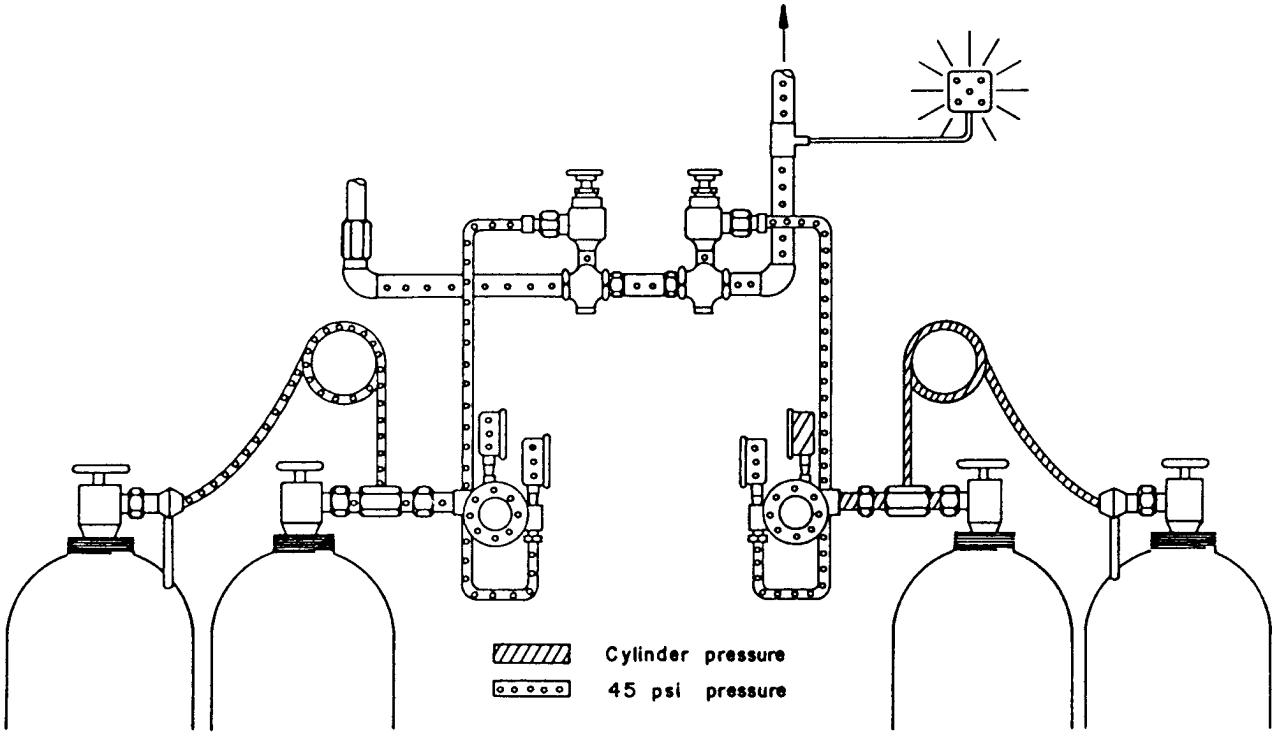

CYLINDER MANIFOLD

Once the pressure in the cylinders of the active cylinder bank (A) has dropped to 45 psi the low pressure alarm is activated and the stand-by bank (B) is supplying gas to the pipeline system at 45 psi. Gas is no longer drawn from the left bank (A).

NOTE: As the pipeline pressure gradually decreases from 50 psi to 45 psi, the anesthesiologist may notice a gradual decrease of gas flow on the respective flowmeter. This can be corrected by increasing the flowrate to the original setting.

NOTE: A pressure decrease in the oxygen pipeline system may also decrease gas flows of other gases if the oxygen failure protection device is effected by this pressure drop.

CYLINDER MANIFOLD

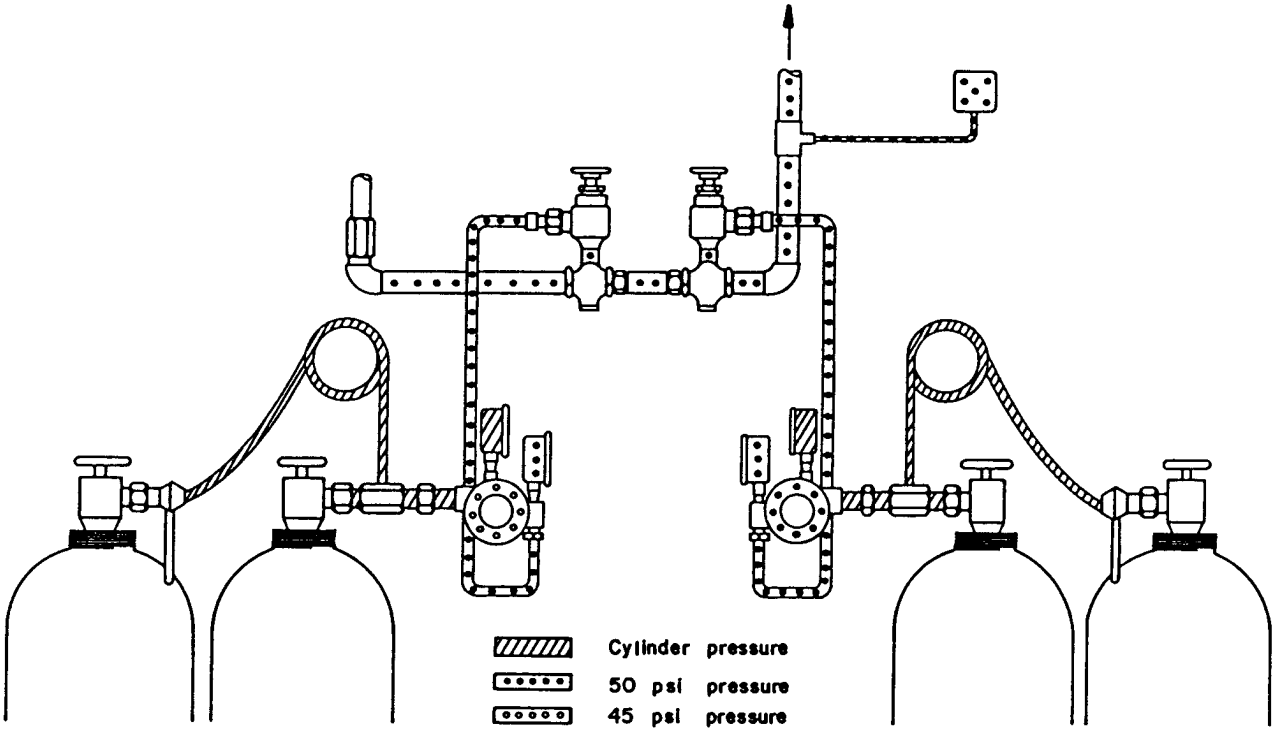

CYLINDER MANIFOLD

The empty cylinders of the left bank (A) must be replaced.

First, the left zone valve (A) must be closed. The hospital pipeline pressure can now be increased to normal operating level (50-55 psi) by adjusting the right pressure reducing regulator (B) of the right cylinder bank (B).

The cylinder valves of the left bank (A) must be closed before the cylinders can be removed. The left pressure reducing regulator (A) must be completely turned OFF. After the full cylinders are connected, the cylinder valves can be turned on and the left pressure reducing regulator (A) must be set to 45 psi hospital pipeline pressure. The left zone valve (A) can now be opened.

The left cylinder bank (A) now serves as the **stand-by** bank, while the right cylinder bank (B) becomes the **active** bank.

NOTE: As the pipeline pressure is increased again from 45 psi to 50 psi, the anesthesiologist will notice an increase of gas flow on the respective flowmeter. This can be corrected by decreasing the flowrate to the original setting.

OXYGEN FAILURE PROTECTION DEVICE

O.F.P. DEVICE

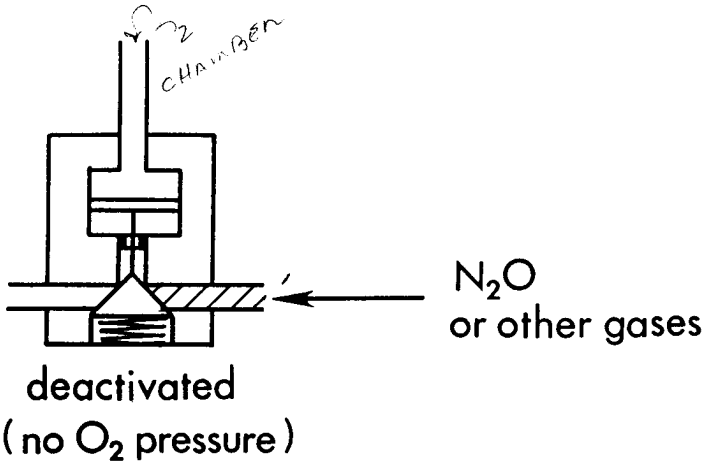
O_2
CHAMBER
N_2O
or other gases
deactivated
(no O_2 pressure)

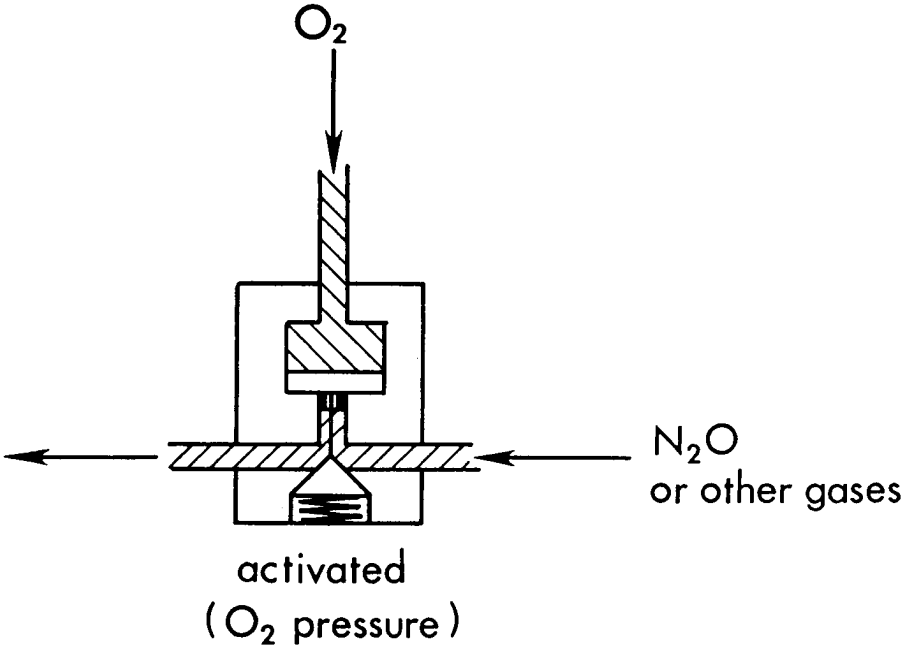
O_2
N_2O
or other gases
activated
(O_2 pressure)

O.F.P. DEVICE

The purpose of the Oxygen Failure Protection Device is to prevent the flow of gases other than oxygen in case of an oxygen supply failure. Without this device pure nitrous oxide could suddenly be administered during anesthesia, should the oxygen supply fail. Since pure nitrous oxide is a hypoxic gas and cannot sustain life, the consequences for the patient would be detrimental.

The O.F.P.D. consists of a seat/nozzle assembly which is connected to a spring loaded piston. In deactivated condition, the spring is expanded which forces the nozzle against the seat. No gas can flow through the device.

As oxygen pressure is building in the anesthesia system, oxygen pressure is also applied to the piston, which forces the nozzle away from the seat. Gas can now flow through the O.F.P.D.

The O.F.P.D. is designed to respond proportionally to oxygen pressure changes. If the oxygen pressure drops, the gases which are controlled by the device will drop approximately proportionally with the oxygen.

All gas systems such as nitrous oxide, air, carbon dioxide, helium or nitrogen contain O.F.P. Devices, which are activated by oxygen pressure. The oxygen system itself does not require an O.F.P.D.

MINIMUM OXYGEN FLOW

MINIMUM OXYGEN FLOW

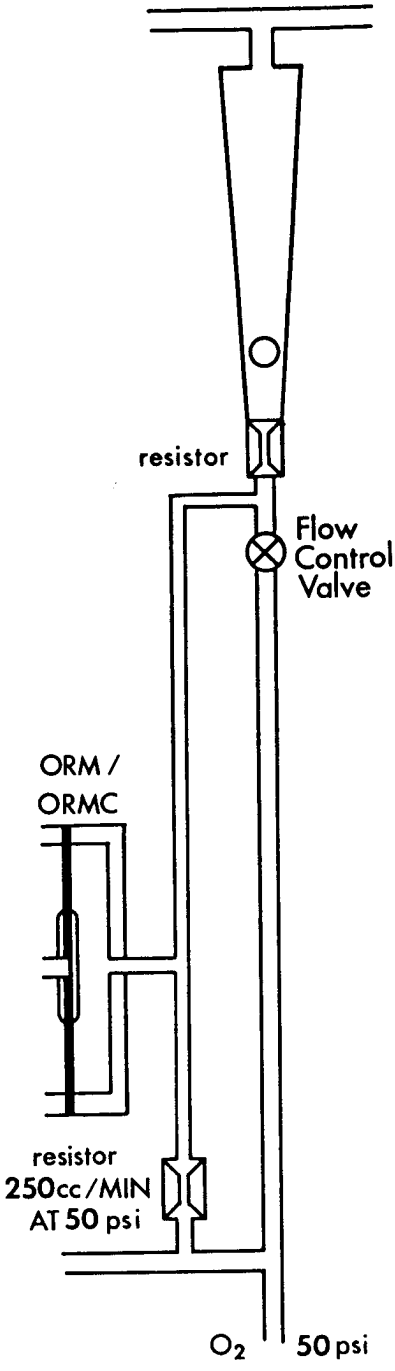

MINIMUM OXYGEN FLOW

The minimum oxygen flow is a safety feature which is incorporated in all NAD Anesthesia Systems with a main ON/OFF switch. The minimum oxygen flow of approximately 250cc at 50 psi pipeline pressure prevents the administration of pure nitrous oxide.

A precalibrated resistor is inserted into a T-piece of the anesthesia machine oxygen supply system. The resistor decreases the gas flow. The reduced gas flow is injected upstream of the oxygen flow control valve, immediately below a second resistor.

In by-passing the oxygen needle valve (flow control valve) a constant minimum oxygen flow is injected into the flowmeter tube.

When the needle valve is turned ON, the minimum flow will be overridden by the regular gas flow.

Closing the needle valve completely will therefore not eliminate the minimum oxygen flow.

OXYGEN RATIO MONITOR (O.R.M.)
AND
OXYGEN RATIO MONITOR CONTROLLER
(O.R.M.c.)

O.R.M

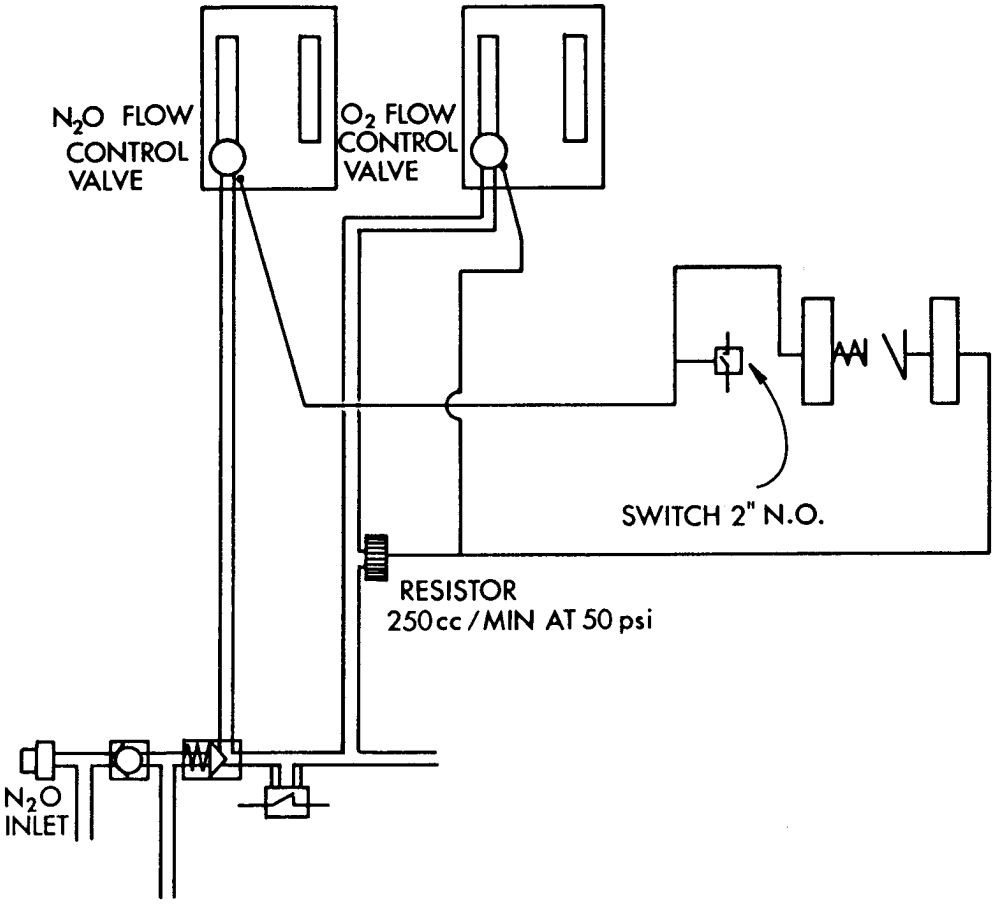
N_2O FLOW CONTROL VALVE
O_2 FLOW CONTROL VALVE
SWITCH 2" N.O.
RESISTOR
250cc / MIN AT 50 psi
N_2O INLET

O.R.M.

The Oxygen Ratio Monitor (O.R.M.) is a mechanical device which responds to pressure changes in the oxygen and the nitrous oxide gas supply systems.

Specific resistors are located between the flow control valves and the fine flowtubes of both gases. Downstream of these resistors (between the flow control valve and the resistor) a back pressure is created which varies with the gas flow. This back pressure is directed into a chamber, which similar to a pressure reducing regulator, has a diaphragm. The diaphragms of the oxygen and nitrous oxide chambers are connected with each other via a movable shaft. When the oxygen flow control valve is turned ON, a back pressure is created and transfered to the oxygen chamber. The back pressure applies pressure on the diaphragm and forces the shaft towards the nitrous oxide chamber. The higher the oxygen flow, the higher the back pressure.

As the nitrous oxide flow is turned ON, pressure is created in the nitrous oxide chamber and the shaft is forced again towards the oxygen chamber.

As oxygen or nitrous oxide flows are changed, the pressure changes in both chambers will cause the shaft to move in either direction. Electric switch contacts which are mounted on the shaft will open and close depending on the direction the shaft is moving. When the contacts are closed an audio/visual alarm is activated. The alarm will indicate that the oxygen percentage of the combined oxygen and nitrous oxide flow has dropped below 30%. The threshold of the 30% oxygen concentration is determined by the value of the 2 (two) resistors.

The operator is able to override the alarm threshold and may administer oxygen concentrations of less than 30%. The audio portion of the alarm can be silenced.

NOTE: The O.R.M. is only functional when oxygen and nitrous oxide are administered. The addition of other medical gases or the substitution of nitrous oxide with another medical gas renders the O.R.M. ineffective.

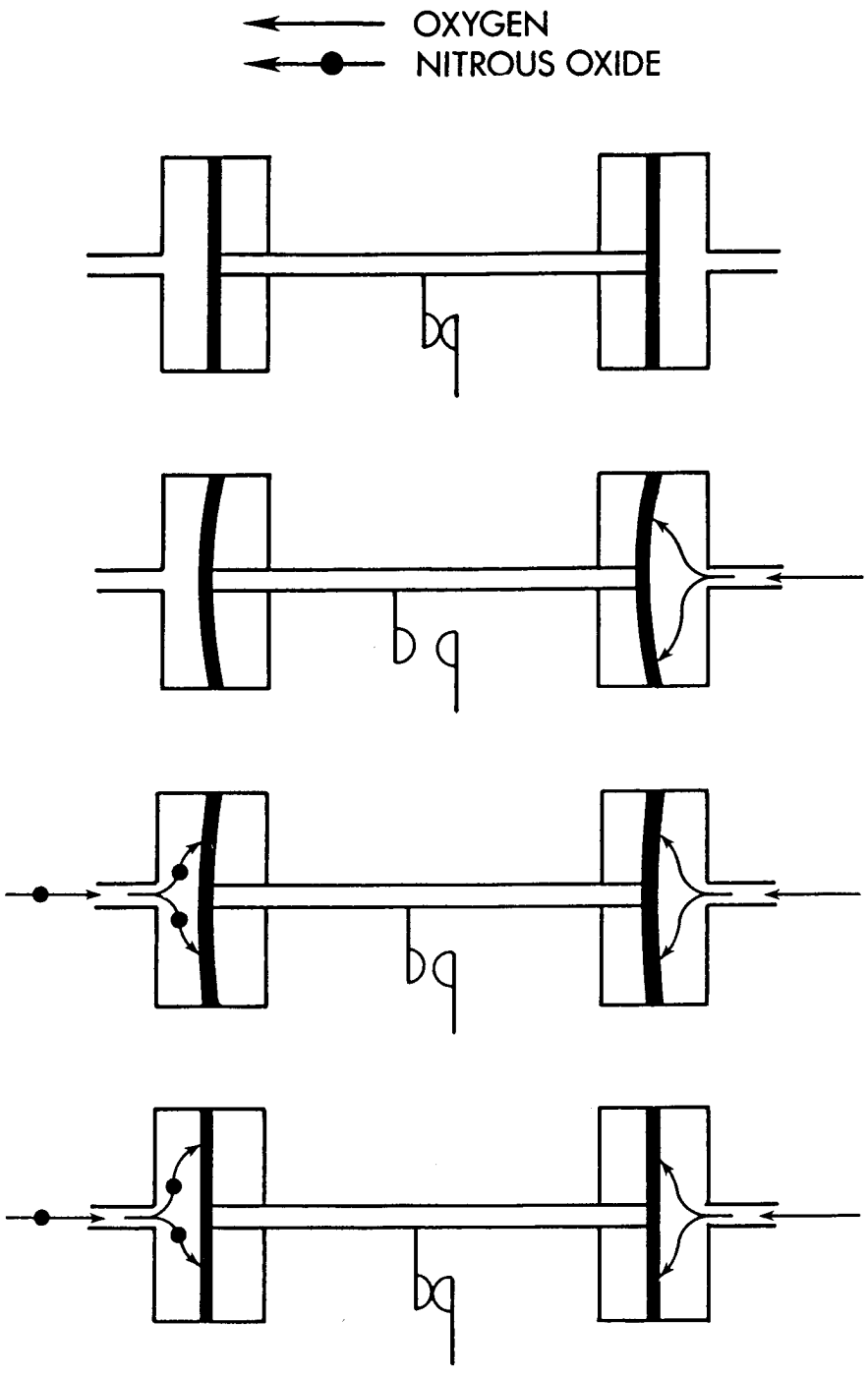
OXYGEN
NITROUS OXIDE

O.R.M.

While the O.R.M. is in the deactivated position, the electric switch contacts are closed.

Oxygen enters the oxygen chamber and pressure build-up forces the diaphragm and shaft towards the nitrous oxide chamber. The switch contacts are open.

Nitrous oxide is entering the nitrous oxide chamber and a counter pressure (depending on the nitrous oxide flow adjustment) is forcing the diaphragms and shaft towards their normal position. The switch contacts are about to close.

A pressure equilibrium is reached (30% oxygen and 70% nitrous oxide concentration is administered). The switch contacts are closed and the alarm is activated. Further increase of the nitrous oxide flow will not change the alarm condition, but will decrease the oxygen concentration while increasing the nitrous oxide concentration.

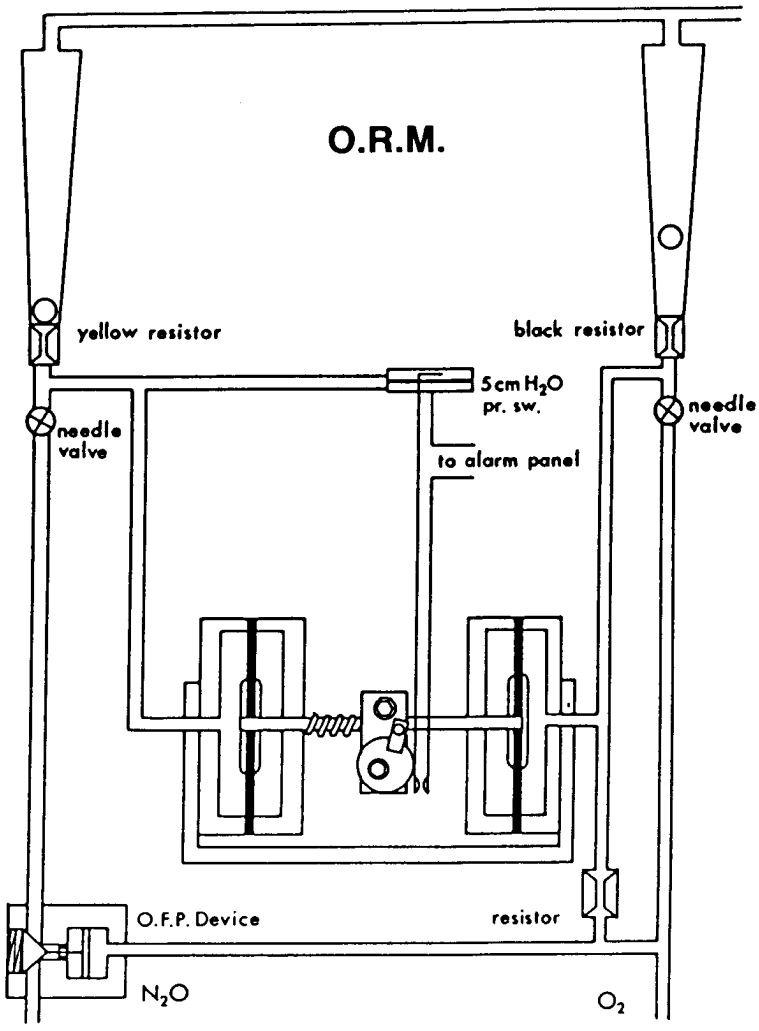
O.R.M.
yellow resistor
black resistor
5 cm H_2O pr. sw.
needle valve
needle valve
to alarm panel
O.F.P. Device
resistor
N_2O
O_2

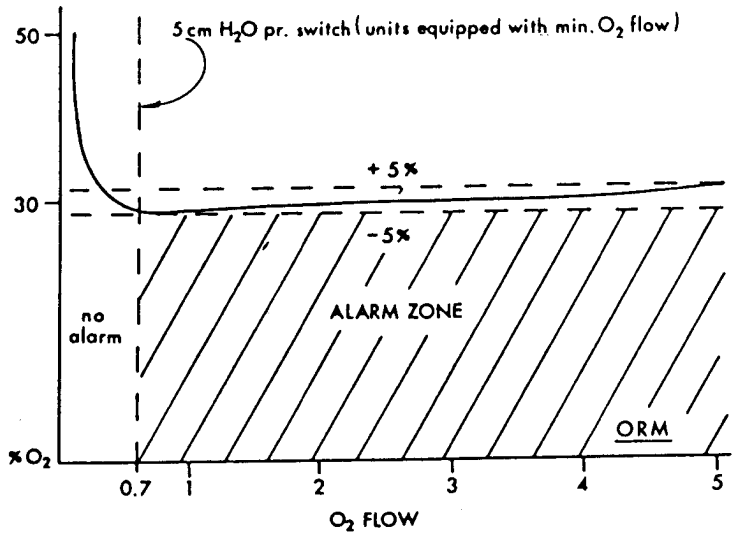
5 cm H_2O pr. switch (units equipped with min. O_2 flow)
50
30
+5%
-5%
no alarm
ALARM ZONE
ORM
% O_2
0.7
1
2
3
4
5
O_2 FLOW

O.R.M.

When the main switch is turned ON (NARKOMED Anesthesia Machines which are equipped with such a switch) the medical gas system becomes functional. The oxygen pressure activates all O.F.P. Devices. The minimum oxygen gas flow is directed into the fine oxygen flowtube.

Since the minimum flow does not create a high enough back pressure in the oxygen chamber of the O.R.M., the electric switch contacts remain closed and an erroneous alarm condition exists. To eliminate this alarm condition a normally open 5cm H_2O pressure switch is placed in series with the electric switch contacts in the nitrous oxide circuit. A minimum of 5cm H_2O nitrous oxide back pressure will close this switch. Therefore, a nitrous oxide flow between 500 and 700cc must be administered before the O.R.M. is operational.

The alarm curve of the O.R.M. shows the correct adjustment to be 30 ± 5% oxygen concentration when oxygen flows above 700cc/min are administered. Below 700cc/min, the oxygen concentration increases and an alarm condition is not required.

O.R.M.c.

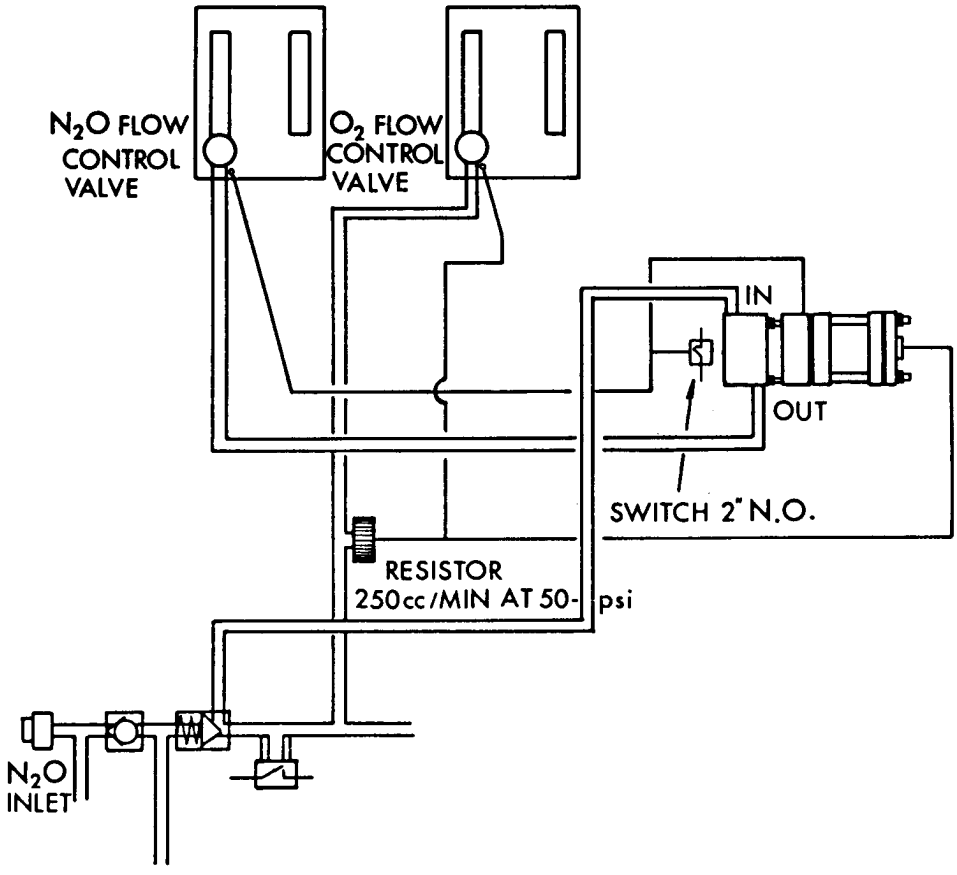
N_2O FLOW CONTROL VALVE
O_2 FLOW CONTROL VALVE
IN
OUT
SWITCH 2" N.O.
RESISTOR
250cc/MIN AT 50- psi
N_2O INLET

O.R.M.c.

The basic design of the Oxygen Ratio Monitor Controller (O.R.M.c.) incorporates the features of the O.R.M. In addition, it prevents the administration of oxygen/nitrous oxide gas mixtures of less than 25% oxygen concentration.

Contrary to the O.R.M., which allows the nitrous oxide to flow directly from the O.F.P. Device to the flow control valve, an additional flow control valve is located between these 2 (two) points. This valve is directly controlled by the O.R.M. section of the O.R.M.c. The shaft is extended beyond the nitrous oxide diaphragm into the valve assembly. As the diaphragm and shaft are moving, the valve assembly opens to a greater or lesser extend.

If the oxygen pressure is proportionally higher than the nitrous oxide pressure, the valve opens to a larger degree allowing more nitrous oxide to flow. As the nitrous oxide flow is manually increased and the nitrous oxide pressure forces the shaft towards the oxygen chamber, the valve opening becomes more restrictive and limits the nitrous oxide flow to the flowmeter.

The O.R.M.c. is designed to prevent the administration of oxygen/nitrous oxide flows of less than 25% oxygen concentration. An audio/visual alarm will warn the operator when gas flows are selected which approach this low oxygen concentration. It will not be possible to override the alarm threshold. To eliminate the alarm condition the oxygen flow must be increased or the nitrous oxide flow decreased. If by mistake the oxygen flow should be decreased during an alarm condition, the nitrous oxide flow will automatically decrease so that an oxygen concentration of at least 25% is maintained.

NOTE: The O.R.M.c. is only functional when oxygen and nitrous oxide are administered. The addition of other medical gases or the substitution of nitrous oxide with another medical gas renders the O.R.M.c. ineffective.

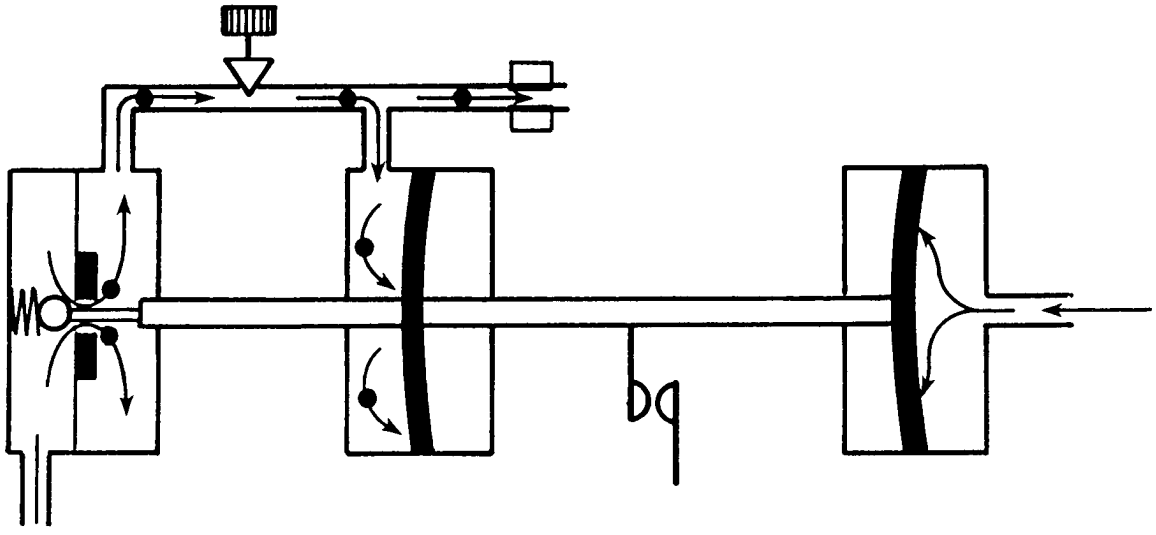

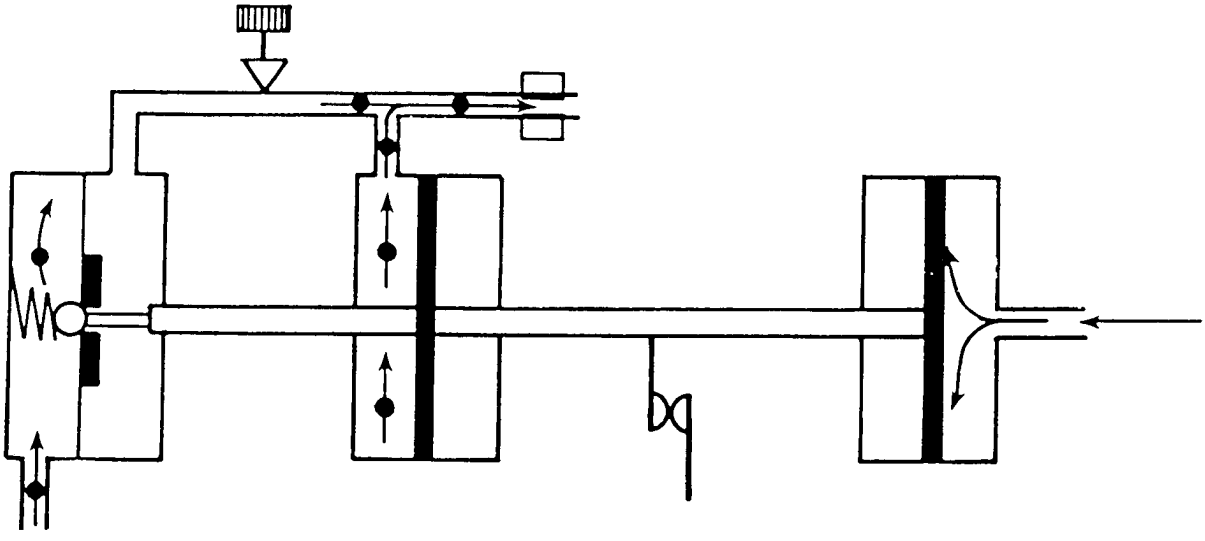

OXYGEN

NITROUS OXIDE

O.R.M.c.

When the nitrous oxide flow control valve is gradually turned ON, nitrous oxide is administered to the patient in addition to oxygen. The back pressure between the needle valve and the resistor applies a counter pressure on the diaphragm of the nitrous oxide chamber. This pressure begins to force the shaft towards the oxygen chamber which results in a greater restriction of gas flow through the O.R.M.c. flow valve. Therefore, the nitrous oxide gas flow through the flowmeter becomes more restrictive. The electric switch contacts are about to touch and indicate an alarm condition.

The oxygen flow control valve is turned OFF and only the minimum oxygen flow is remaining. Although the nitrous oxide flow control valve is wide open the gas flow is interrupted by the O.R.M.c. valve and the remaining nitrous oxide is depleted.

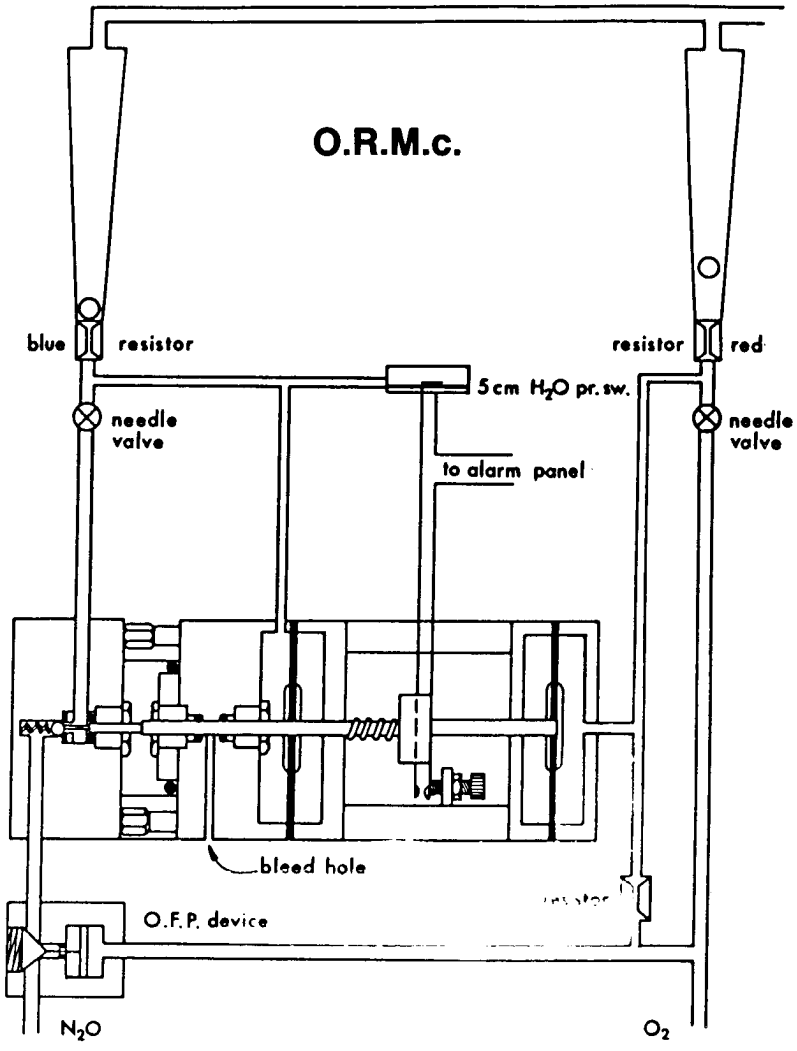
O.R.M.c.
blue
resistor
resistor
red
5 cm H_2O pr. sw.
needle valve
needle valve
to alarm panel
bleed hole
O.F.P. device
N_2O
O_2

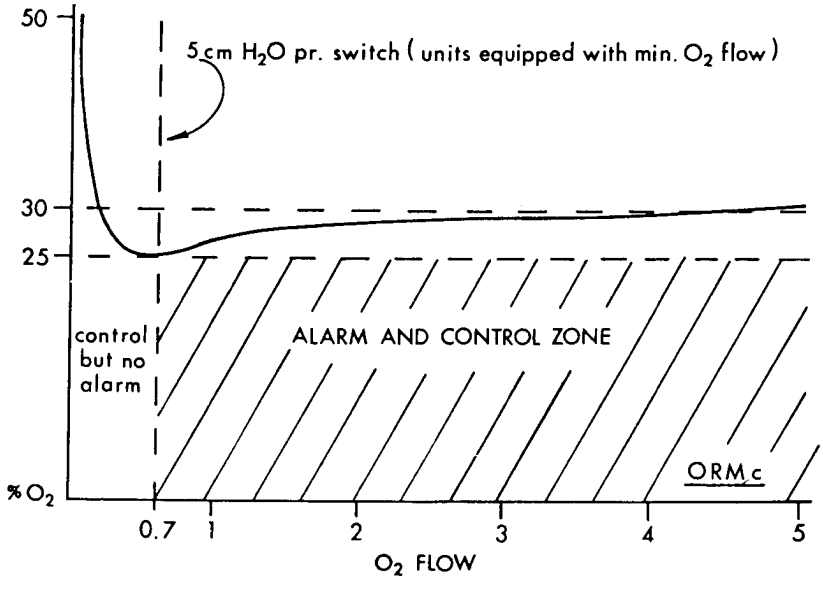
50
30
25
5 cm H_2O pr. switch (units equipped with min. O_2 flow)
control but no alarm
ALARM AND CONTROL ZONE
ORM.c
% O_2
0.7
1
2
3
4
5
O_2 FLOW

O.R.M.c.

All parameters which were described for the O.R.M. apply for the O.R.M.c. with 2 (two) exceptions:

1. The nitrous oxide flow is directed through the O.R.M.c. flow valve where the gas to the nitrous oxide flowtube is automatically limited by the O.R.M.c.
2. No oxygen/nitrous oxide gas flows can be administered which contains less than 25% oxygen concentrations. **The operator cannot override the alarm condition.**

The alarm curve of the O.R.M.c. shows that oxygen concentrations are 25% in the low flow range and increase to approximately 30% oxygen in higher flow ranges. The 5cm H_2O pressure switch prevents the activation of the audio/visual alarm in oxygen flow ranges below 700cc/min without effecting the control function of the O.R.M.c.

GAS PIPING SYSTEM OF NARKOMED 2A

PIPING DIAGRAM - NM2A

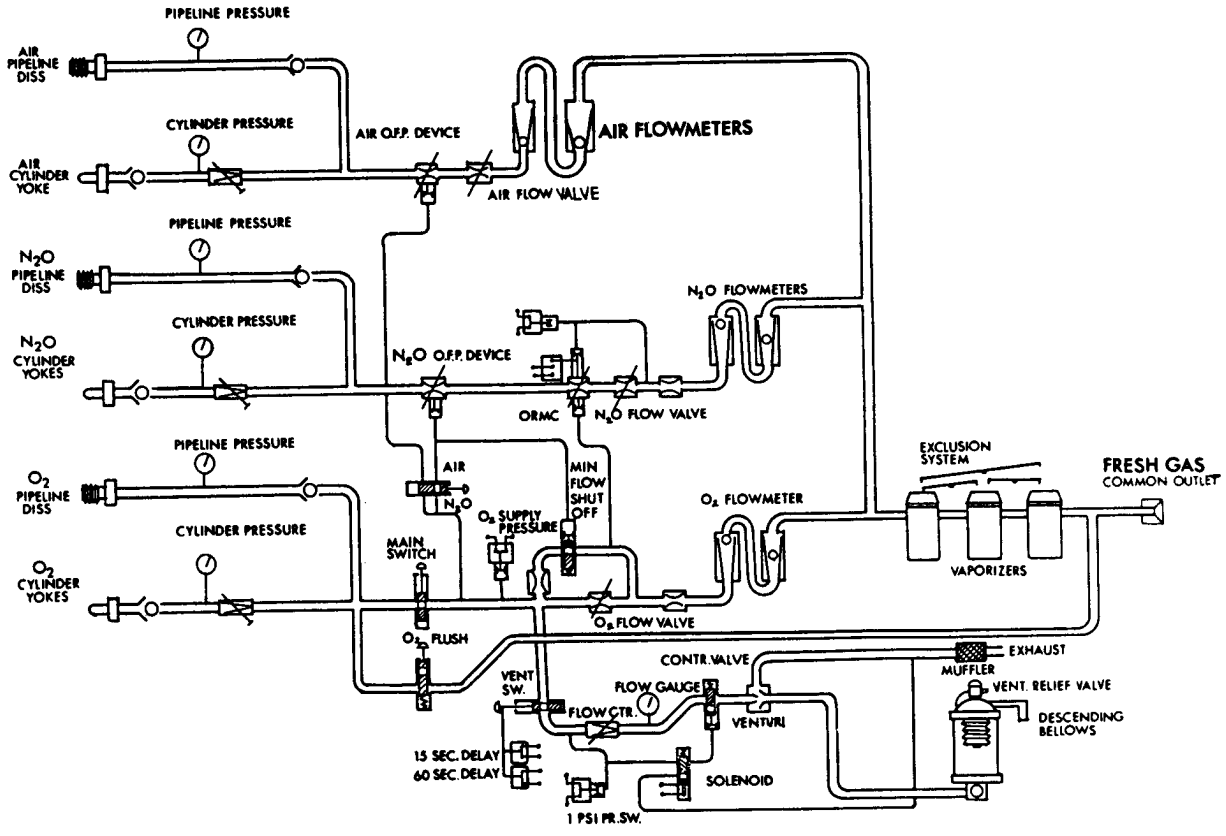

PIPING DIAGRAM - NM2A

All NAD Anesthesia Machines are designed to use oxygen as the primary gas. All other gases can only be administered after oxygen supply pressure is available.

OXYGEN SUPPLY FROM CENTRAL MEDICAL GAS SYSTEM

Oxygen enters the anesthesia machine through the DISS inlet. The cylinder regulator and check valve prevent reverse gas flow through the yoke. The same principle applies also for all other gases.

OXYGEN SUPPLY FROM RESERVE CYLINDER

Oxygen enters the anesthesia machine through the yoke assembly. The cylinder pressure is reduced in the regulator. The pipeline check valve prevents reverse gas flow through the DISS inlet. The same principle applies also for all other gases.

BASIC PRINCIPLE OF PIPING SYSTEM

Although pipeline and cylinder pressure are indicated on the appropriate pressure gauges, gas flows cannot be activated until the main switch is turned ON.

The exception is the oxygen flush, which by-passes the anesthesia system and can be activated, as long as oxygen pressure is available.

After the main switch is turned ON, oxygen pressure will build in the remaining oxygen system. If the N_2O/Air selector switch is set to the N_2O position, the minimum oxygen flow will be noticed and the oxygen supply pressure alarm switch will be deactivated. The nitrous oxide O.F.P.D. will also be activated, which will allow the administration of oxygen/nitrous oxide mixtures. In this condition, the O.R.M.c. is functional.

As long as the main switch remains turned ON, oxygen supply pressure is available for the operation of the anesthesia ventilator.

The oxygen/nitrous oxide mixture is directed to the vaporizers. Depending on which vaporizer is chosen for anesthesia, the gas mixture carries the appropriate vapor to the fresh gas (common) outlet and from there to the absorber system.

NARKOMED 2A - 2 GAS, 2 YOKE

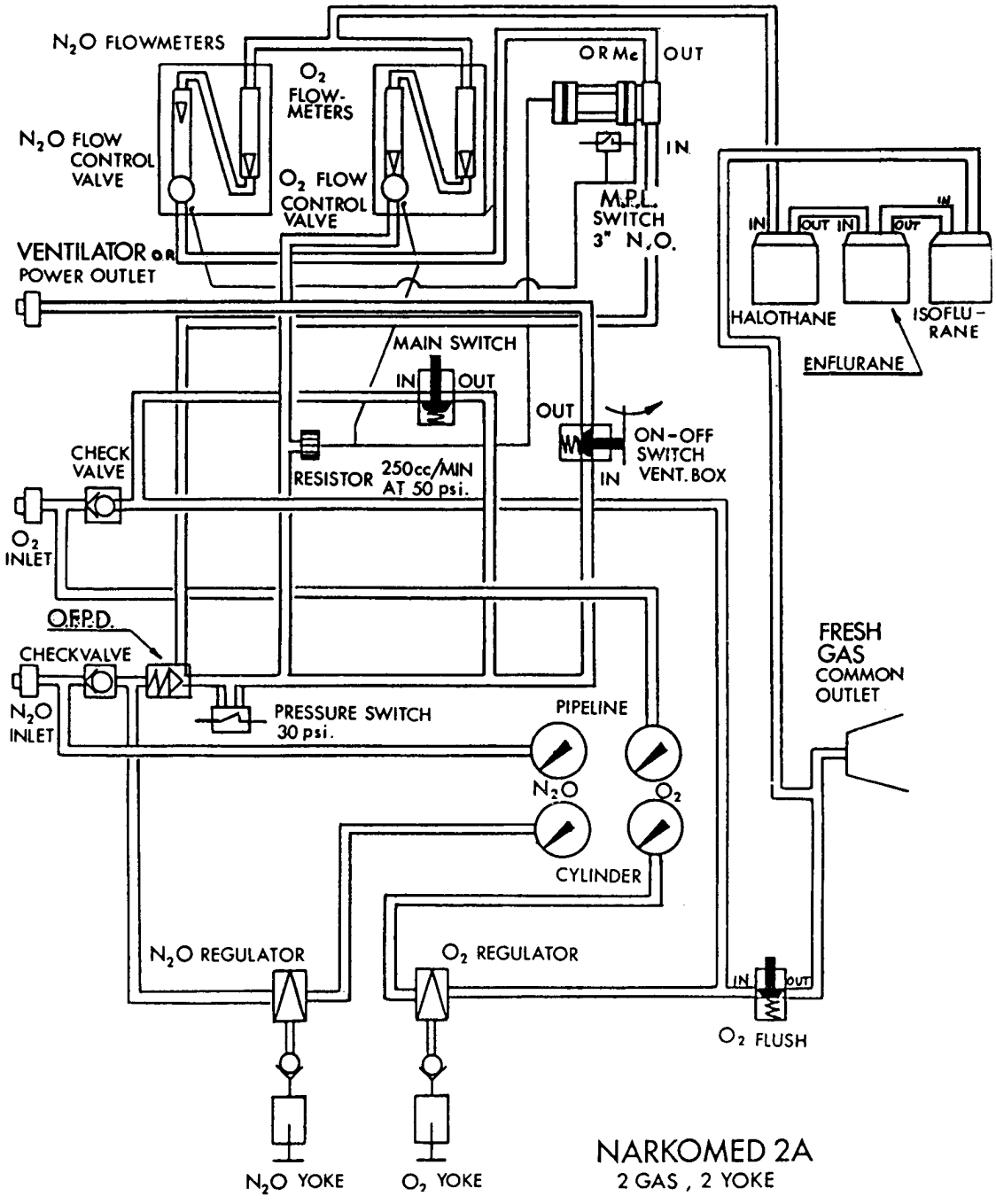

NARKOMED 2A - 2 GAS, 2 YOKE

This schematic shows a NARKOMED 2A gas piping system which employs only oxygen and nitrous oxide (no air).

NARKOMED 2A anesthesia machines which are not equipped with a NAD anesthesia ventilator, are supplied with a ventilator ON/OFF switch. This switch activates oxygen gas supply at 50 psi pressure to a power outlet and also activates the minimum ventilation alarm. The power outlet can be used to operate any anesthesia ventilator which requires 50 psi oxygen pressure.

NOTE: Double lines indicate 1/4" copper tubing while straight lines indicate 3/16" plastic tubing.

AIR ATTACHMENT - DISS/YOKE

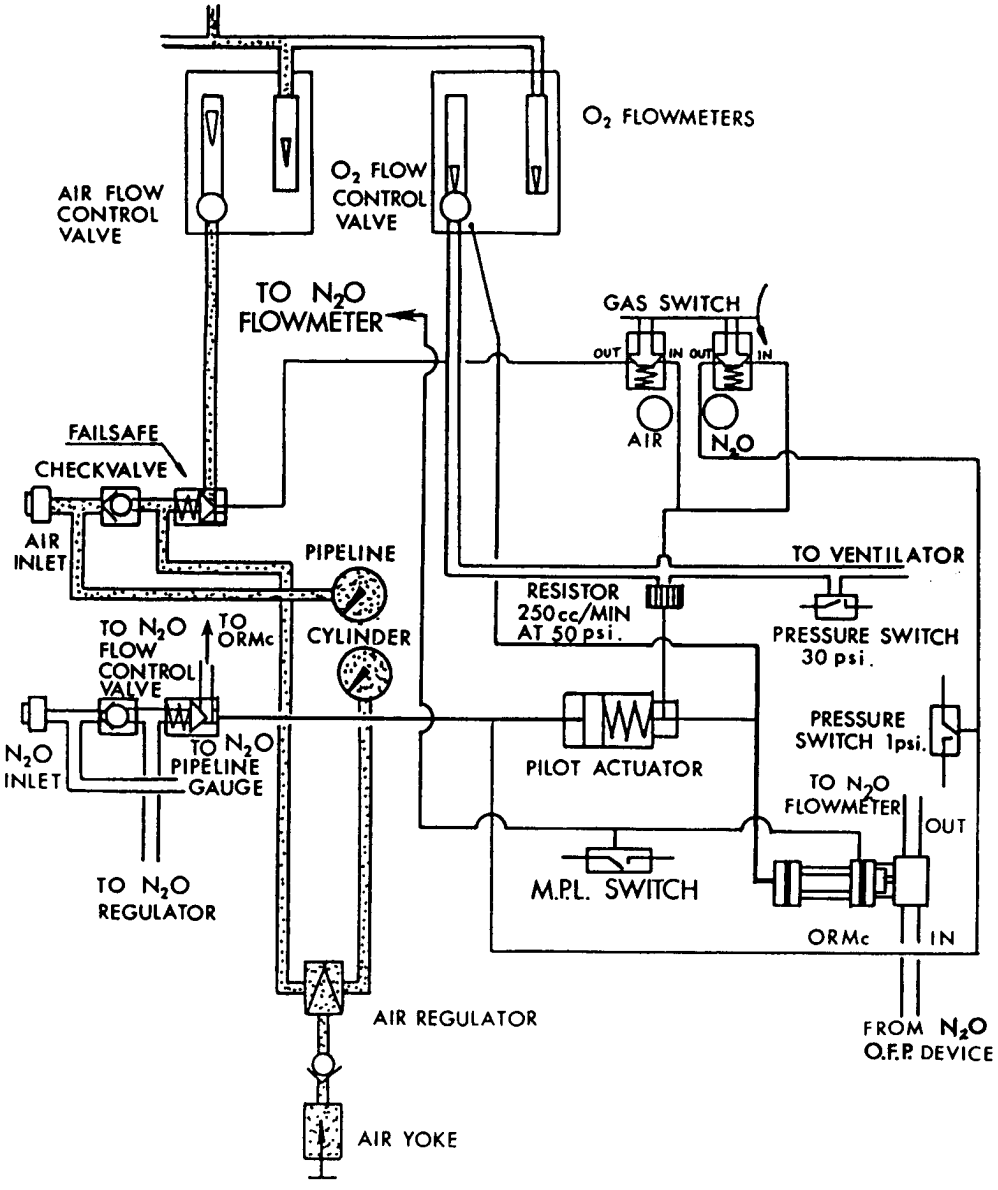

AIR ATTACHMENT - DISS/YOKE

The DISS/Yoke system of anesthesia machines equipped with air employs the same principle as oxygen and nitrous oxide. These machines are also equipped with a N_2O/Air selector switch (gas switch). In the N_2O position, oxygen **with** minimum oxygen flow and nitrous oxide can be administered (no air). In the Air position, oxygen **without** minimum flow and Air can be administered (no N_2O).

NOTE: Double lines indicate 1/4" copper tubing while straight lines indicate 3/16" plastic tubing.

N_2O/AIR SELECTOR SWITCH (GAS SWITCH) IN N_2O POSITION

Oxygen at 50 psi pressure is directed through the N_2O section of the selector switch. It passes a 1 psi pressure switch, which becomes activated. This switch is located in series with the O.R.M.c. electronic circuit and must be closed to indicate an oxygen/nitrous oxide ratio alarm condition. The oxygen line continues and is divided into 2 (two) directions. One is connected to the nitrous oxide O.F.P.D., while the other activates a pilot actuator. In activated condition, this unit is open and allows the minimum oxygen flow to enter the oxygen fine flowtube. The O.R.M.c. is also functional since pressure feed back from the O_2 and N_2O flowmeters are available and the 1 psi switch is closed.

N_2O/AIR SELECTOR SWITCH (GAS SWITCH) IN AIR POSITION

Oxygen at 50 psi pressure is directed through the Air section of the selector switch. It continues from the switch and activates the Air O.F.P.D. Since oxygen pressure is no longer supplied to the 1 psi pressure switch, the electronic circuit of the O.R.M.c. alarm function remains open and eliminates the O.R.M.c. as a safety device while Air is in use.

No oxygen pressure is supplied to the nitrous oxide O.F.P.D. and the pilot actuator. Neither can nitrous oxide be used, nor is the minimum oxygen flow available since the pilot actuator is deactivated.

VENTURI

VENTURI EFFECT

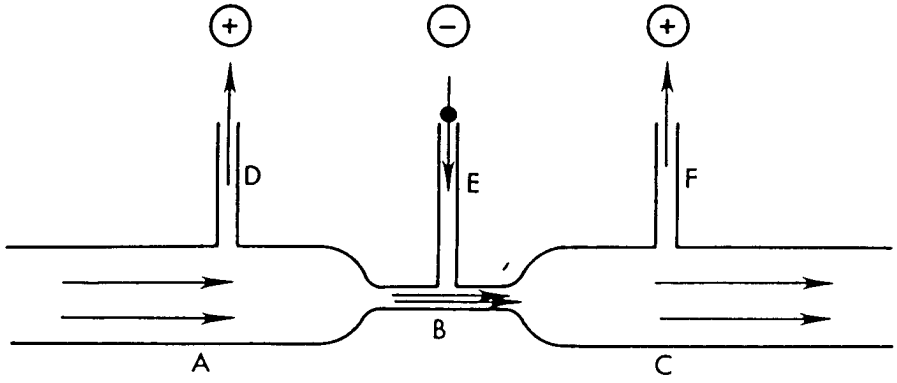

INJECTOR

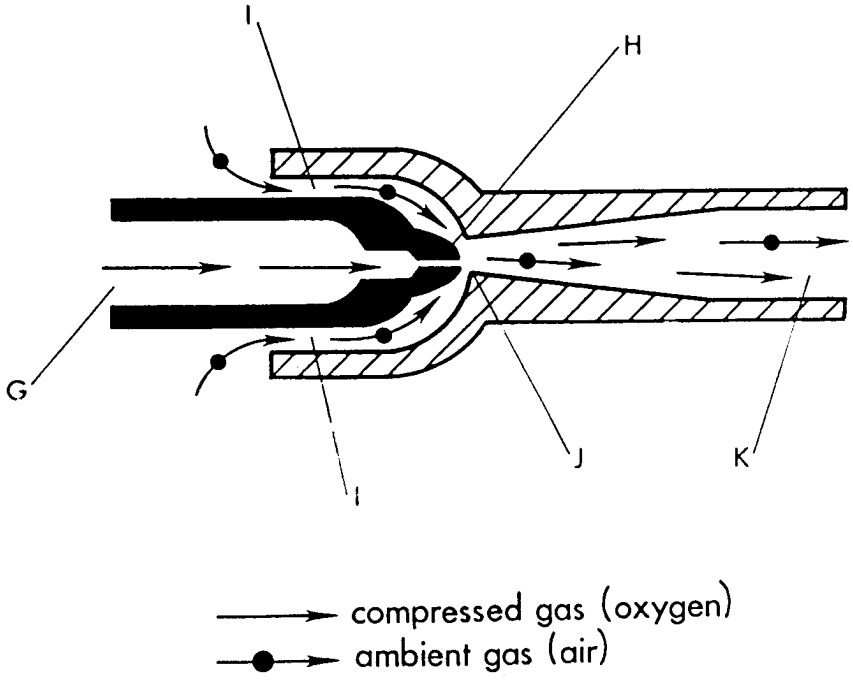

VENTURI EFFECT

A fluid or gas is flowing through a long, large bore tube with a constriction (B) in the center. The constriction is smooth, so the flow remains laminar. While the flow rate in the larger part of the tube (A) and (C) is the same, the flow rate in the smaller part of the tube (B) is increased. The pressure in part (A) is converted into speed in constriction (B). Therefore, the pressure in constriction (B) is decreased and will even drop below atmospheric pressure. Then the pressure is measured at points D,E and F, the pressure will be positive (above atmosphere) at points D and F, and negative (below atmosphere) at point E. This phenomenon is called **Venturi Effect.**

INJECTOR

There are many applications for the venturi effect. The NAD anesthesia ventilator uses the venturi effect to increase the gas flow, respectively gas volume into the bellows canister. Although commonly called venturi, the device is actually an injector.

The injector (venturi) consists of the compressed gas tube (G), a jet (H), entrainment port (I), throat (J) and diffuser (K).

As the compressed gas is forced at high speed through the jet and throat, which resembles the constriction, a sub-atmospheric pressure is created in the entrainment port. This results in ambient air being added to the compressed gas source which consequently are combined in the diffuser. The result is the availability of a considerably larger gas volume than the original compressed gas source could have supplied.

NAD ANESTHESIA VENTILATOR AV-E

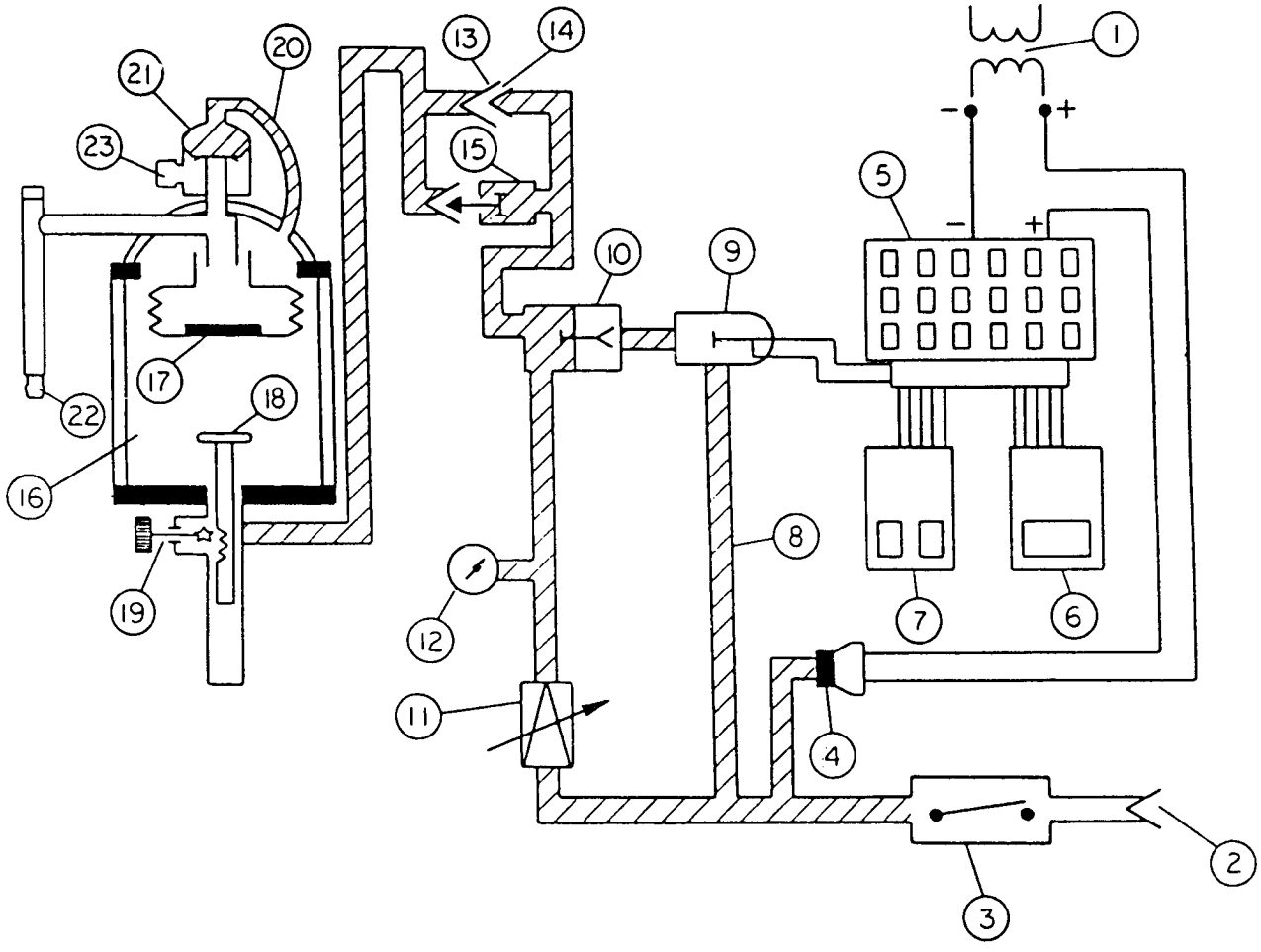
1
2
3
4
5
6
7
8
9
10
11
12
13
14
15
16
17
18
19
20
21
22
23
-
+
-
+

NAD ANESTHESIA VENTILATOR AV-E
LEGEND

1. Electric power supply (117 VAC)
2. Gas supply - Oxygen (50 psi)
3. Ventilator ON/OFF switch
4. Electrical supply ON/OFF switch (1 psi pressure switch)
5. AV-E - P.C. Board
6. I:E ratio control
7. Frequency control
8. Solenoid pilot pressure line
9. Solenoid valve
10. Control valve
11. Flow regulator
12. Flow indicator gauge
13. Venturi
14. Venturi entrainment port
15. Pilot actuator
16. Bellows chamber
17. Bellows
18. Tidal Volume adjustment plate
19. Tidal Volume control
20. Relief valve pilot line
21. Ventilator relief valve
22. Patient breathing system connector
23. Waste gas scavenging system connector

NOTE: Oxygen supply pressure and electric power must be supplied to operate the AV-E

INSPIRATORY FLOW TIME

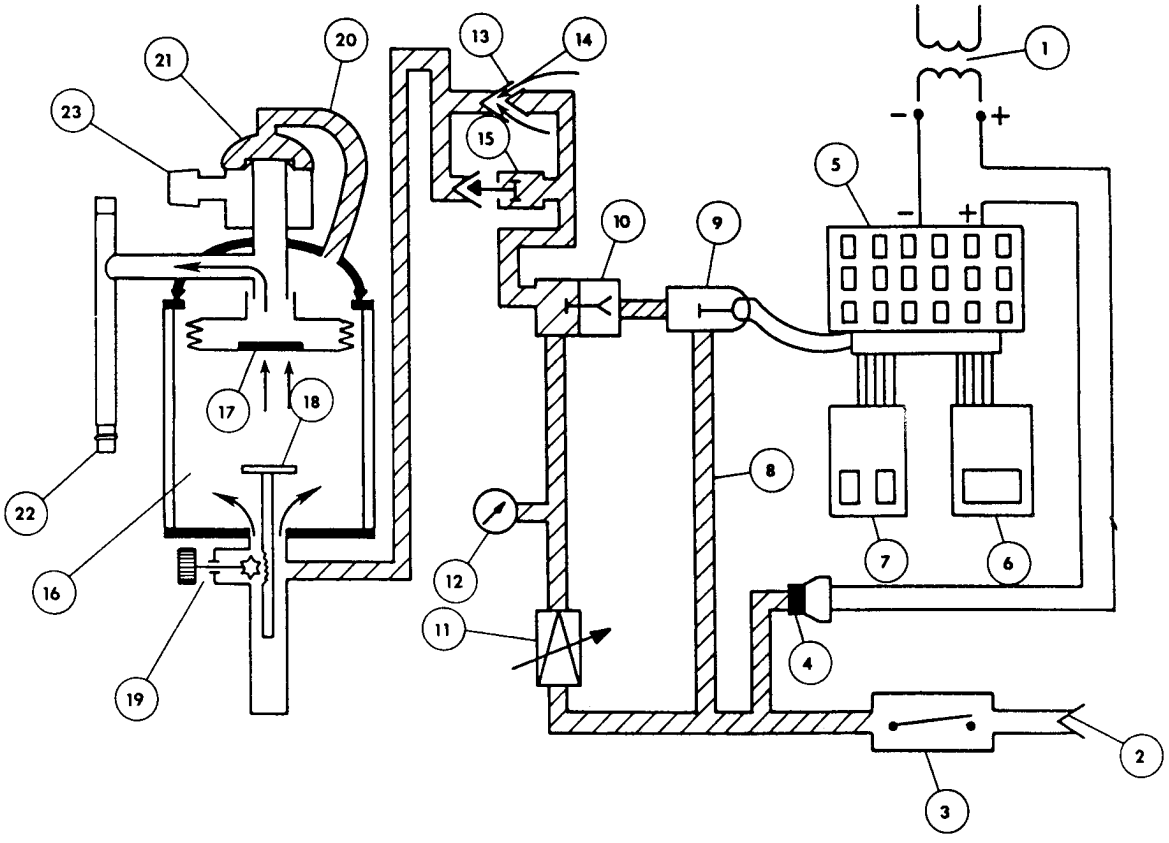

INSPIRATORY FLOW TIME

After ventilator ON/OFF switch (3) is turned ON, gas pressure is supplied to 1 psi switch (4), which is activated and supplies the electronic circuit with electric power. Flow regulator (11) can now be adjusted to the desired inspiratory flow rate. Frequency (7) and I:E ratio (6) controls must be adjusted as desired. Solenoid valve (9) receives an electric signal from AV-E P.C. Board (5). This electric signal will remain during the entire inspiration and activates the solenoid valve (9). Gas at 50 psi pressure can now pass through solenoid valve (9) and activate control valve (10). This allows the preset gas flow from flow regulator (11) to pass through the control valve (10) to venturi (13). The preset inspiratory flow rate can be monitored on flow indicator gauge (12). Back pressure from venturi (13) is directed to pilot actuator (15) which is closed. Ambient gas is entrained by venturi (13) through entrainment port (14). The combined gas is forced into bellows chamber (16). As pressure develops in bellows chamber (16) the bellows (17) rise and force air into the patient's lungs through patient breathing connector (22). Gas pressure is also supplied via the pilot line (20) from bellows chamber (16) to ventilator relief valve (21). This valve, which replaces the APL valve of the manual breathing circuit remains closed as long as bellows chamber (16) contains pressure.

INSPIRATORY PAUSE TIME

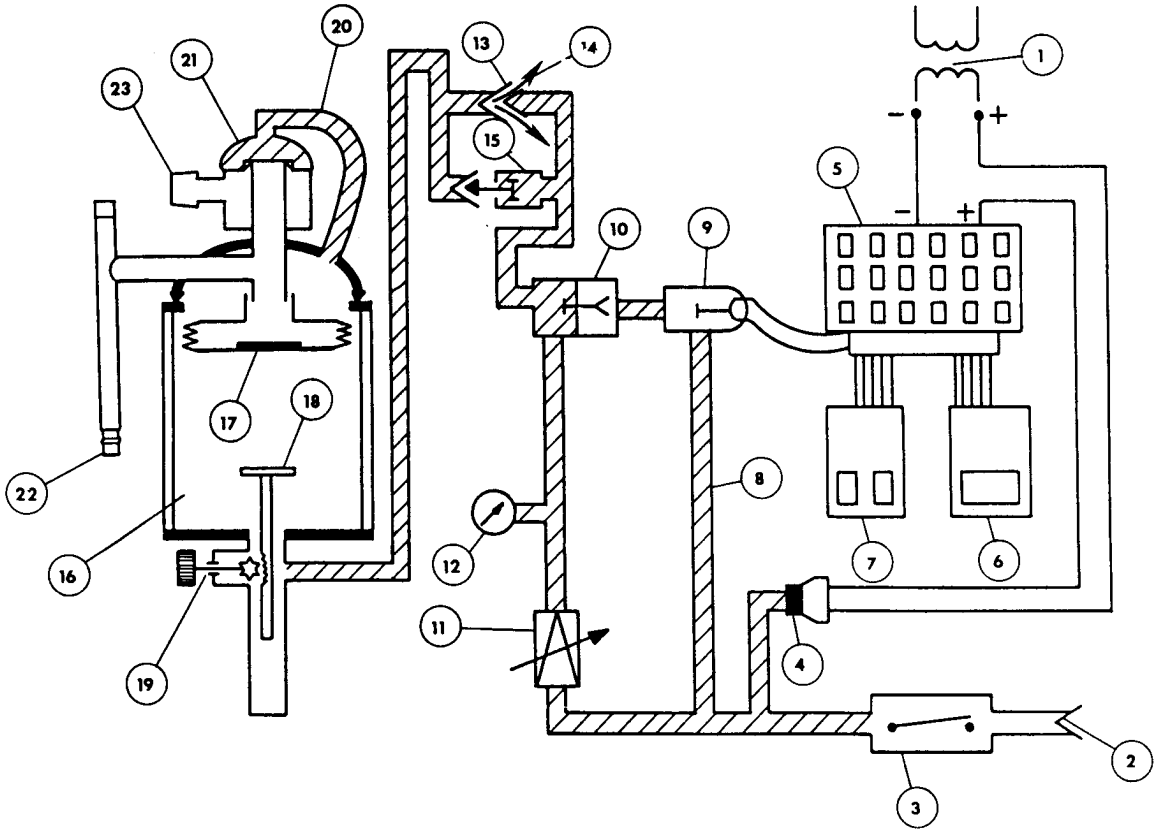

INSPIRATORY PAUSE TIME

The inspiratory pause time (inspiratory pause) starts at the time when the bellows stop the upward movement and lasts until the downward movement of the bellows begins.

All pneumatic and electronic functions remain the same as during the inspiratory flow time. The pressure in the bellows chamber (16), as preset with the flow regulator (11) cannot increase further. Therefore, all excess pressure is released through the entrainment port (14). Venturi (13) does not entrain air into the system at this point.

EXPIRATORY FLOW TIME

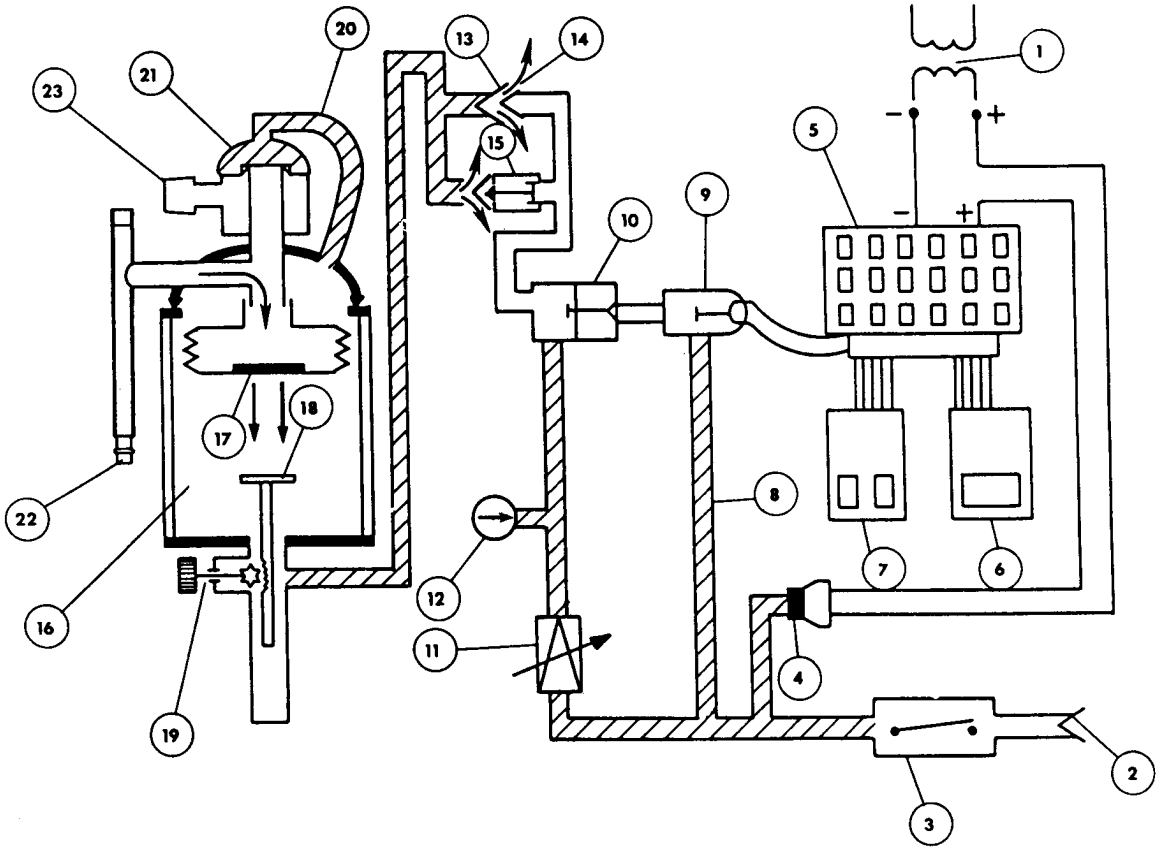

EXPIRATORY FLOW TIME

Based on frequency and I:E ratio setting on frequency control (7) and I:E ratio control (6), the expiratory flow time begins when the electric signal from the AV-E P.C. Board (5) is no longer supplied to solenoid valve (9). As soon as the electric signal stops, solenoid valve (9) is deactivated and closes. This stops the gas supply of 50 psi pressure to control valve (10), which becomes also deactivated and closes. The preset gas flow from flow regulator (11) is interrupted by control valve (10). This causes an immediate pressure drop at venturi (13) and no back pressure is supplied to pilot actuator (15). This valve opens and allows gas from bellows chamber (16) to discharge through pilot actuator (15), but also through the entrainment port (14) of venturi (13). As the pressure drops in bellows chamber (16), the bellows (17) begin to move downward. As long as any pressure still remains in bellows chamber (16), ventilator relief valve (21) is also pressurized and remains closed.

EXPIRATORY PAUSE TIME

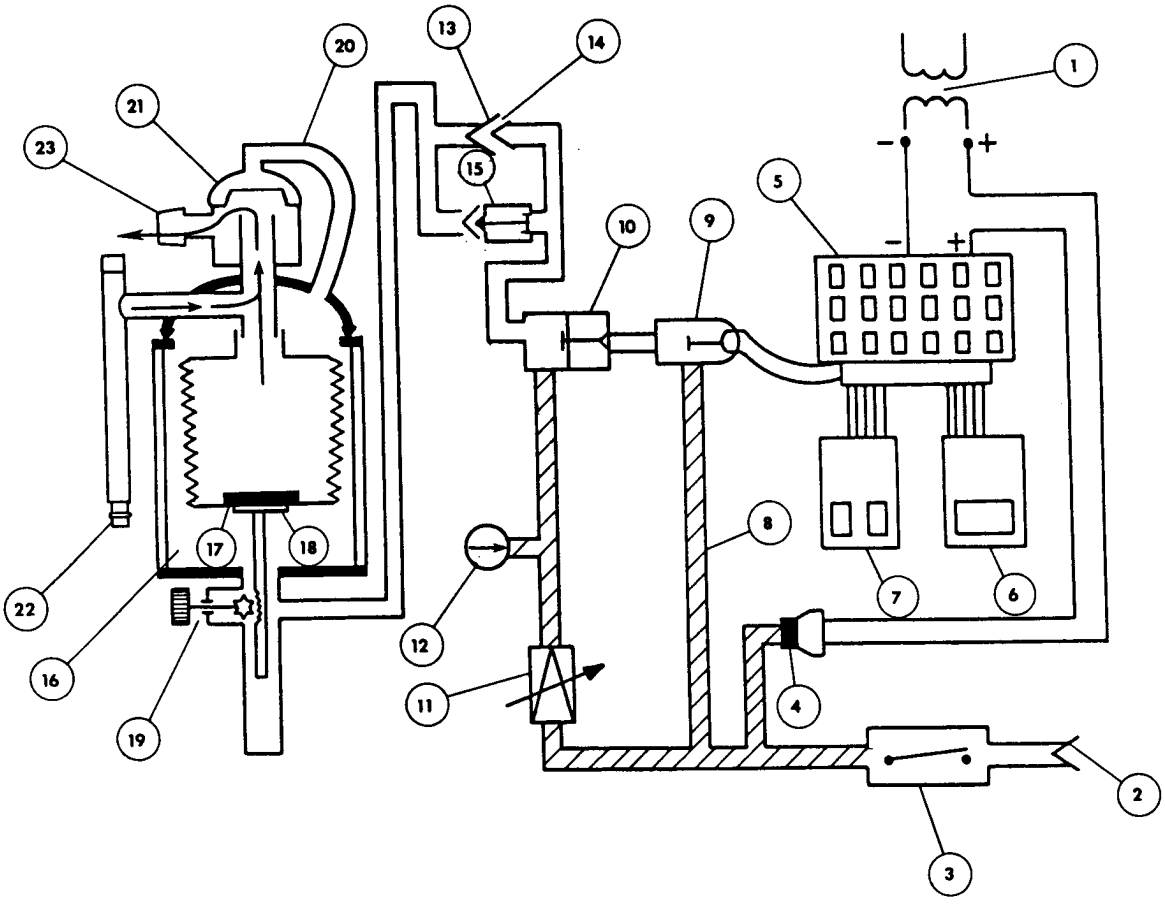

EXPIRATORY PAUSE TIME

The expiratory pause time (expiratory pause or resting period) starts at the time when the bellows stop the downward movement (bellows resting on tidal volume adjustment plate 18) and lasts until the upward movement of the bellows begins.

All pneumatic and electronic functions remain the same as during the expiratory flow time with the exception of ventilator relief valve (21). Since no pressure remains in the bellows chamber (16), no pressure is transmitted via pilot line (20) to ventilator relief valve (21). Therefore, this valve is open and residual exhaled gases as well as excess fresh gas flow are discharged through the waste gas scavenging system connector (23) into the scavenger interface.

NAD CO_2 ABSORBER SYSTEM

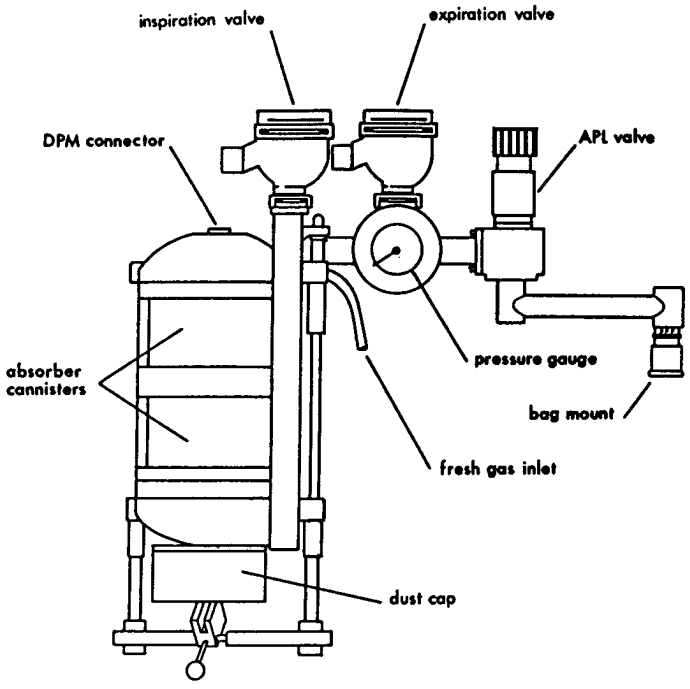

CO_2 ABSORBER SYSTEM

MANUAL/AUTOMATIC SELECTOR VALVE

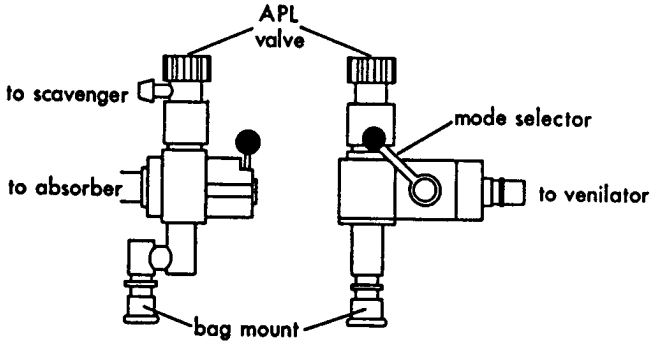

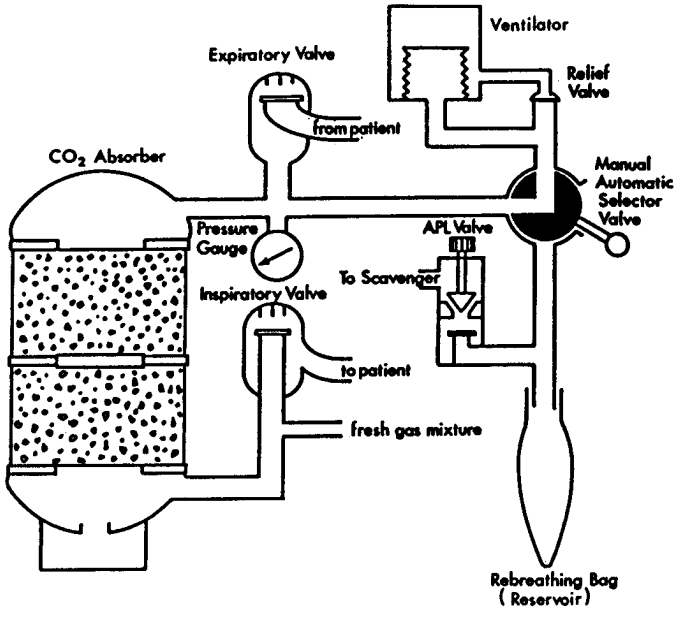

PATIENT BREATHING SYSTEM

CO_2 ABSORBER SYSTEM

The purpose of the absorber system is to direct inspired and expired gases to and from the patient through unidirectional valves without allowing the patient to rebreathe his own exhaled carbon dioxide (CO_2). A breathing (reservoir) bag allows for accumulation of gases during expiration but also compensates for pressure changes in the breathing circuit. The inspiratory pressure is controlled by the adjustable pressure limiter (APL) valve and can be observed on the absorber pressure gauge.

MANUAL/AUTOMATIC SELECTOR VALVE

This valve is only required when a ventilator is being used instead of a breathing bag. When switched to ventilator mode the function of the breathing bag and the APL valve are eliminated while the ventilator with the automatically controlled relief valve become part of the patient breathing system.

PATIENT BREATHING SYSTEM

The patient breathing system shows the CO_2 absorber with inspiratory and expiratory valves as well as fresh gas inlet and pressure gauge. The manual/automatic selector valve is shown in the ventilator mode, by-passing the breathing bag and the APL valve.

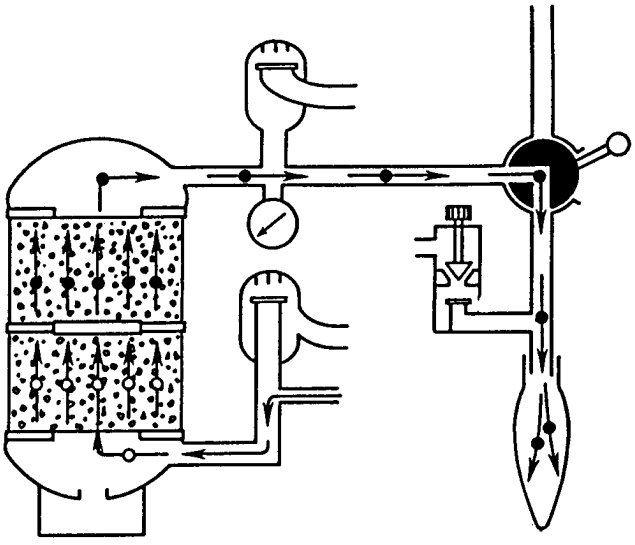

fresh gas mixture (100% oxygen)
exhaled gas with CO_2
exhaled gas without CO_2

OXYGEN FLUSH
Step 1

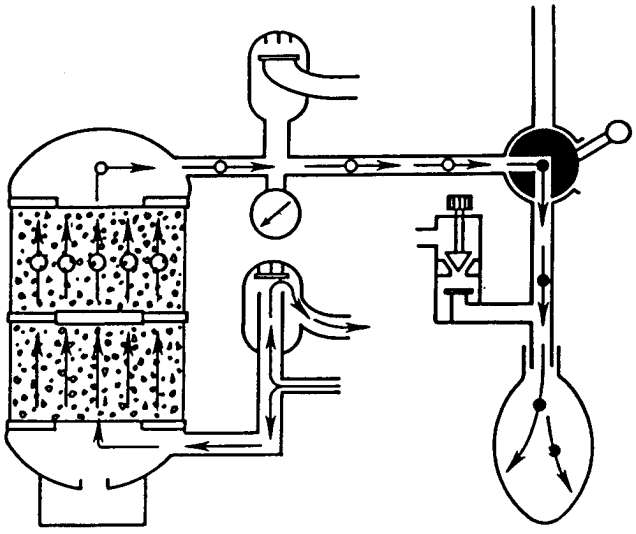

fresh gas mixture (100% oxygen)
exhaled gas with CO_2
exhaled gas without CO_2

OXYGEN FLUSH
Step 2

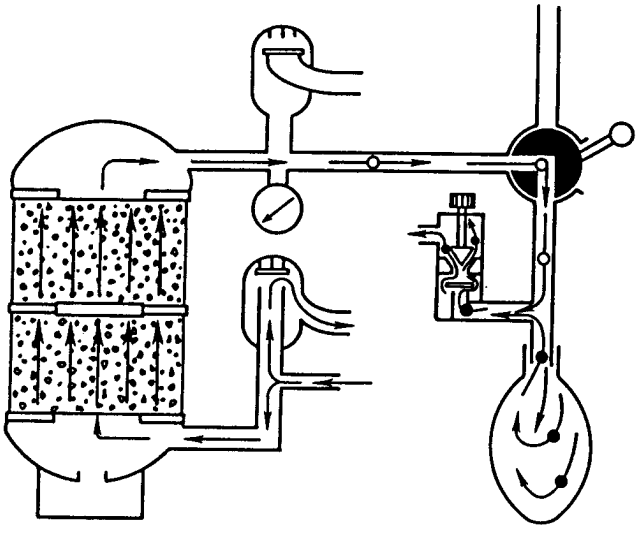

fresh gas mixture (100% oxygen)
exhaled gas with CO_2
exhaled gas without CO_2

OXYGEN FLUSH
Step 3

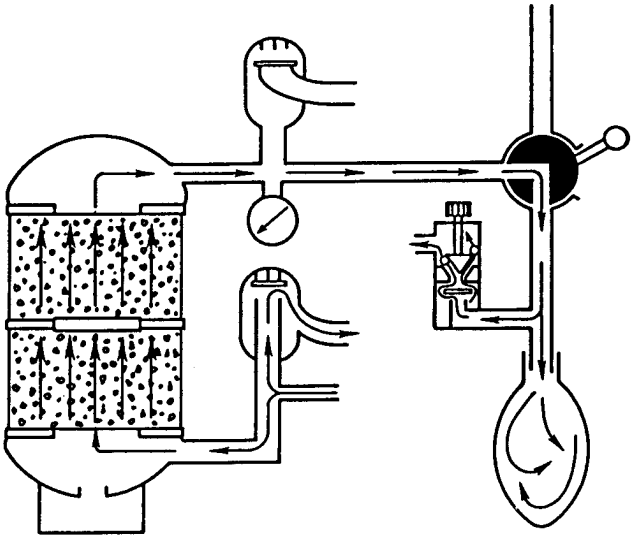

fresh gas mixture (100% oxygen)
exhaled gas without CO_2

OXYGEN FLUSH
Step 4

OXYGEN FLUSH (STEP 1)

Activation of the flush valve charges the patient breathing system with 100% oxygen. Exhaled gases from the previous exhalation, which are still in the absorber system, are forced towards the breathing bag. Some of the exhaled gas still contains CO_2 while gas which had already entered the CO_2 absorber does not.

OXYGEN FLUSH (STEP 2)

As the oxygen flush continues a minimal pressure opens the inspiratory valve while at the same time more gas is forced into the breathing bag.

OXYGEN FLUSH (STEP 3)

As the breathing bag expands, a pressure build-up in the breathing system will open the APL valve for some of the gas to escape. The opening pressure of the APL valve depends on the manual adjustment of this valve.

OXYGEN FLUSH (STEP 4)

Eventually all exhaled gases will be purged from the patient breathing system and be replaced with 100% oxygen. The APL valve will remain open (depending on manual adjustment) and all excess gas (100% oxygen) will be directed into the scavenger system.

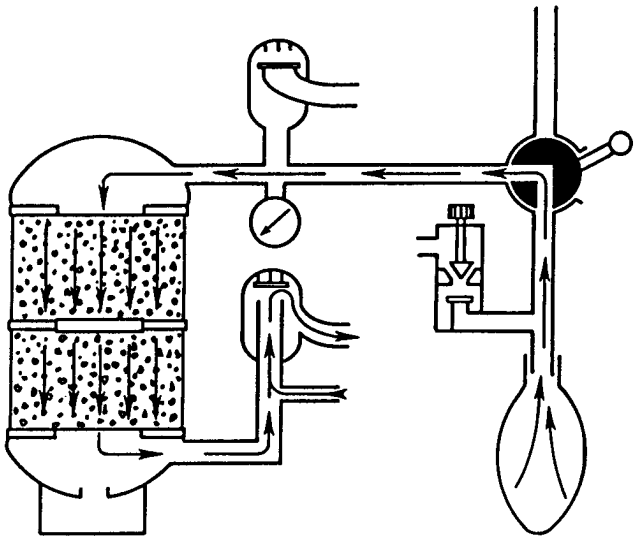

fresh gas mixture

SPONTANEOUS INSPIRATION
Step 5

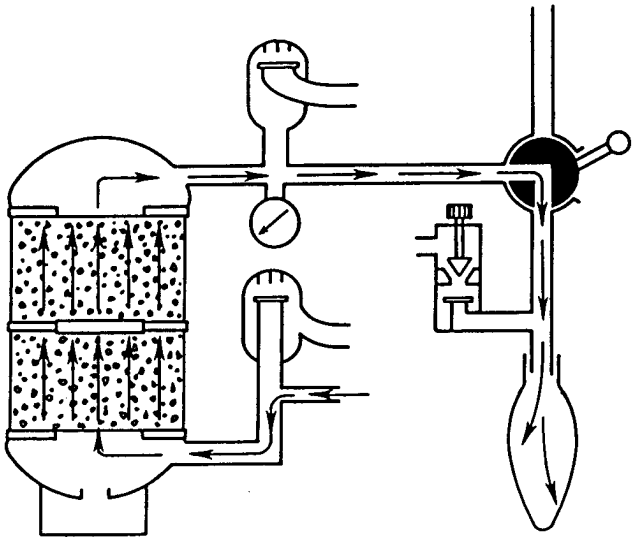

fresh gas mixture

INSPIRATORY PAUSE
Step 6

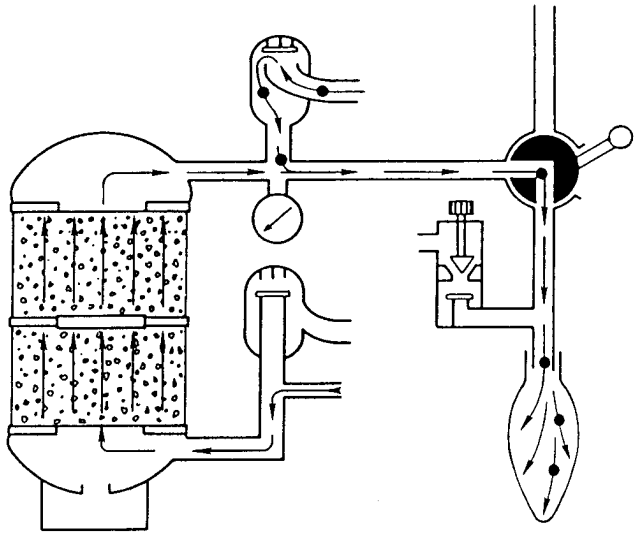

fresh gas mixture
exhaled gas with CO_2

EXPIRATION
Step 7

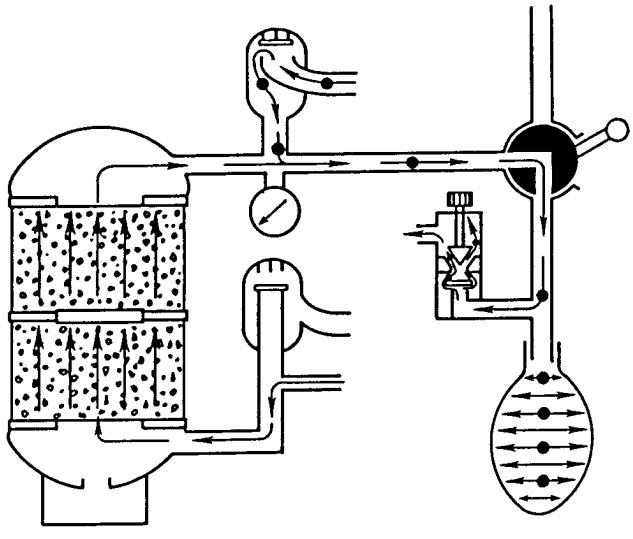

fresh gas mixture
exhaled gas with CO_2

EXPIRATION
Step 8

SPONTANEOUS INSPIRATION (STEP 5)

The patient is inhaling by drawing gas from the breathing bag (100% oxygen). The inspiratory valve opens, but no positive pressure develops. Since the flush valve is no longer activated, the fresh gas mixture contains oxygen, nitrous oxide and anesthetic vapor.

INSPIRATORY PAUSE (STEP 6)

Gas flow to the patient stops just prior to exhalation. All of the fresh gas mixture is now directed towards the breathing bag. Inspiratory and expiratory valves are closed.

EXPIRATION (STEP 7)

The expiratory valve opens as the patient exhales. The exhaled gas is directed to the breathing bag which begins to fill with exhaled gas containing CO_2 and fresh gas mixture.

EXPIRATION (STEP 8)

As the breathing bag fills with exhaled gas and fresh gas mixture, the pressure in the patient breathing system rises slightly and the APL valve (depending on manual adjustment) opens to allow for all excess gases (exhaled and fresh) to be directed into the scavenger system.

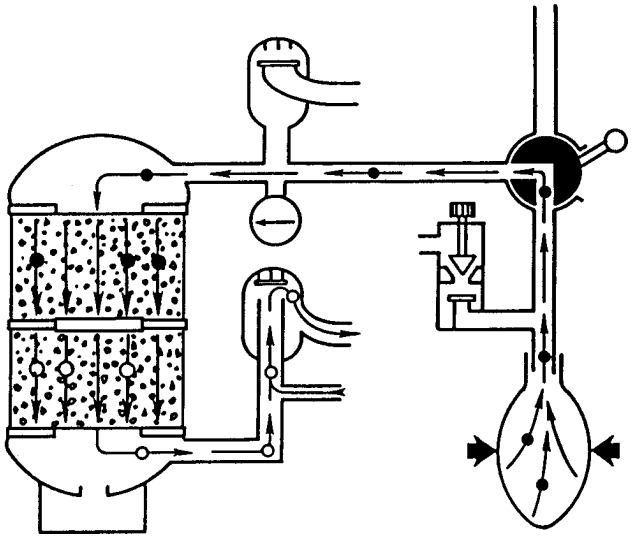

fresh gas mixture
exhaled gas with CO_2
exhaled gas without CO_2

ASSISTED MANUAL VENTILATION
Step 9

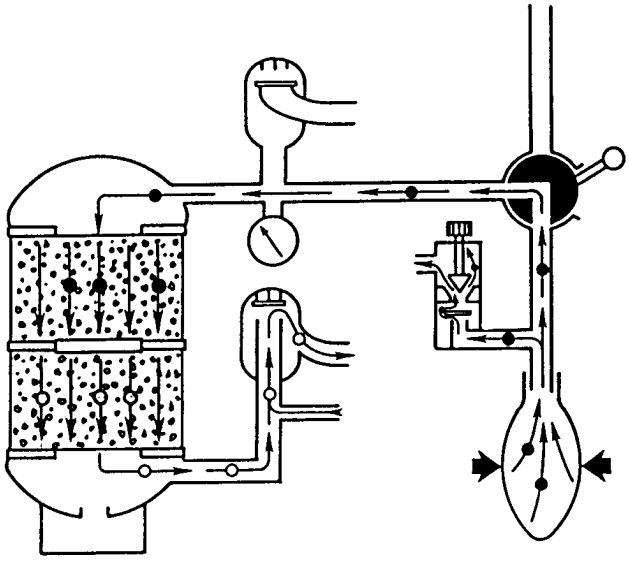

fresh gas mixture
exhaled gas with CO_2
exhaled gas without CO_2

ASSISTED MANUAL VENTILATION
Step 10

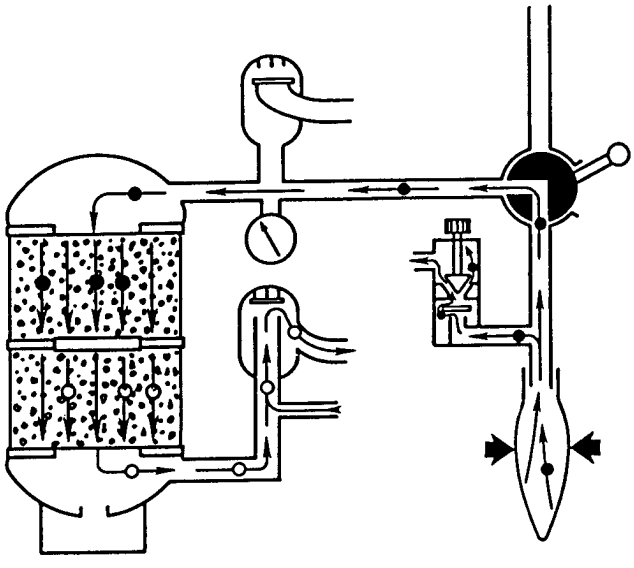

fresh gas mixture
exhaled gas with CO_2
exhaled gas without CO_2

ASSISTED MANUAL VENTILATION
Step 11

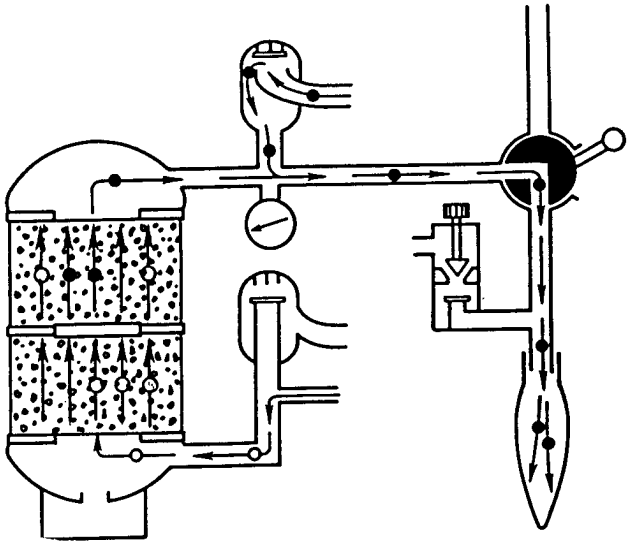

fresh gas mixture
exhaled gas with CO_2
exhaled gas without CO_2

EXHALATION
Step 12

ASSISTED MANUAL VENTILATION (STEP 9)

When the breathing bag is compressed manually fresh gas mixture and exhaled gas is forced through the absorber towards the patient. In the absorber all exhaled CO_2 is removed. As indicated on the pressure gauge, the system pressure begins to rise and the inspiratory valve opens.

ASSISTED MANUAL VENTILATION (STEP 10)

Depending on the adjustment of the APL valve, the valve will open when a certain pressure is reached by compressing the bag. Excess gases (fresh and exhaled) are directed into the scavenger system.

ASSISTED MANUAL VENTILATION (STEP 11)

Most of the gas from the breathing bag is used to assist the patient during inspiration.

EXHALATION (STEP 12)

As expiration begins the expiratory valve opens and allows the patient to exhale. The inspiratory valve is closed and the fresh gas mixture forces the remaining exhaled gases in the absorber system towards the breathing bag. The system pressure has almost dropped to 0 (zero).

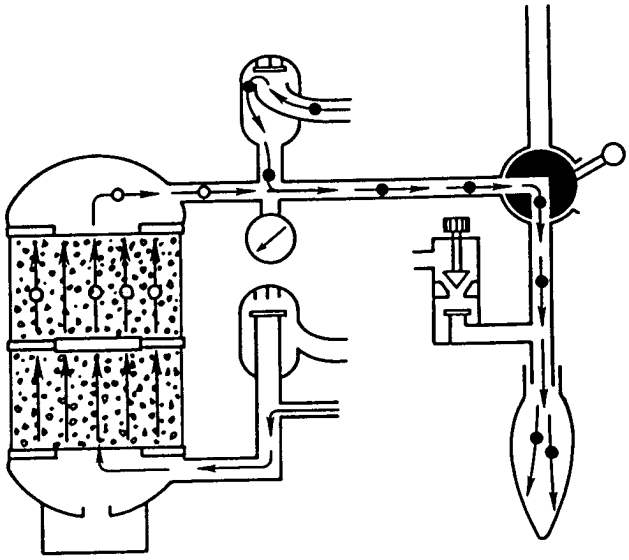

fresh gas mixture
exhaled gas with CO_2
exhaled gas without CO_2

EXHALATION
Step 13

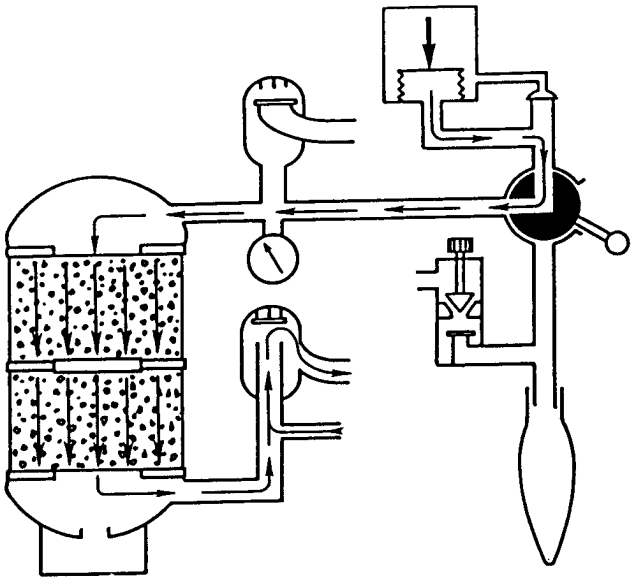

mixed gases

VENTILATOR MODE
(Inspiration)

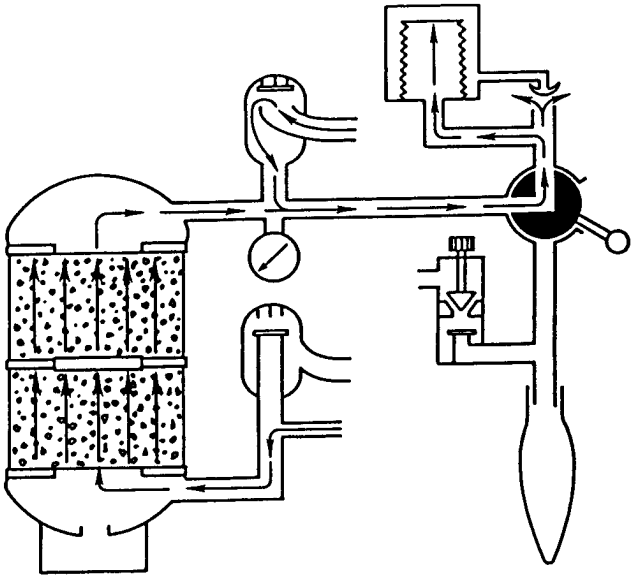

mixed gases

VENTILATOR MODE
(Expiration)

EXHALATION (STEP 13)

Pressure has dropped to 0 (zero) and exhaled gases as well as fresh gas mixture are filling the breathing bag. The cycle continues with step 8.

VENTILATOR MODE (INSPIRATION)

An automatic ventilator is being used instead of manual operation. The manual/automatic selector valve is switched to ventilator mode. The breathing bag is replaced with the bellows of the ventilator. A ventilator relief valve, which automatically closes during inspiration, replaces the APL valve. Exhaled gases and fresh gas mixture air forced from the ventilator bellows to the patients. The system pressure is rising.

VENTILATOR MODE (EXPIRATION)

The exhaled gases and fresh gas mixture are directed towards the ventilator bellows. The ventilator relief valve opens automatically and excess gases are directed into the scavenger system. The system pressure has dropped to 0 (zero).

SCAVENGER INTERFACE
FOR
CENTRAL VACUUM SYSTEM

SCAVENGER INTERFACE

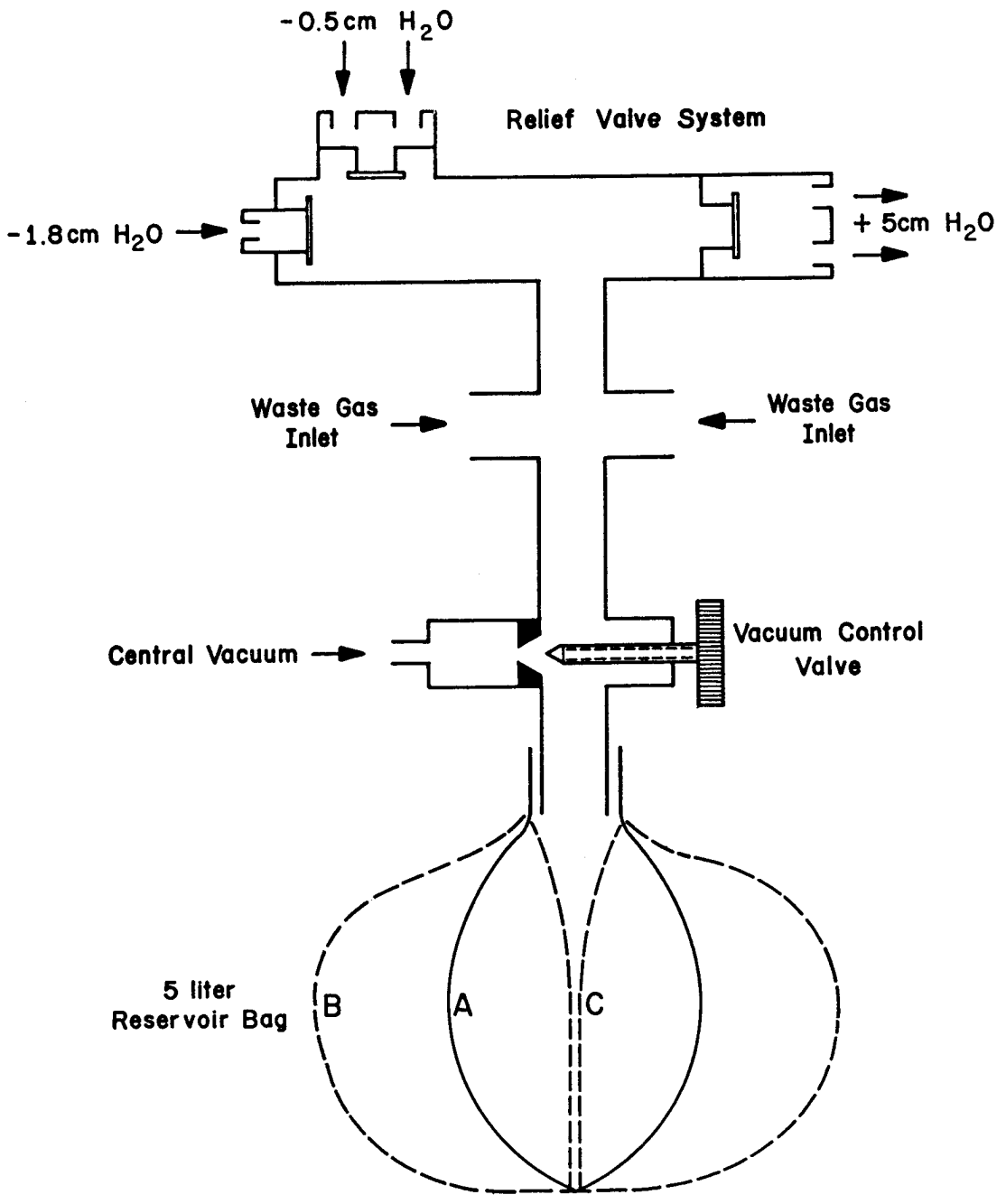

SCAVENGER INTERFACE

The Scavenger Interface for vacuum can be used in conjunction with the central hospital vacuum system (patient suction system) or with seperate vacuum system especially dedicated for the removal of waste gases.

All waste gases produced during general anesthesia are channeled via the APL valve or ventilator relief valve to the scavenger interface.

The hospital vacuum system is connected to the vacuum DISS male connector and a 5 (five) liter reservoir bag is attached to the bag mount of the scavenger interface. A control valve allows for the correct adjustment of the vacuum. The reservoir bag serves as a pressure compensator. It is important to adjust the vacuum control valve in such a manner that the reservoir bag is never overextended (B) or completely deflated (C).

Since a variable volume of waste gas is dumped into the scavenger system intermittently, while the vacuum remains relatively constant, it may be necessary to adjust the vacuum control valve during anesthesia. The reservoir bag will serve as the indicator for the correct setting, (condition A).

Exhaled humidity must not be allowed to accumulate in scavenger hoses or other parts of the scavenger system, as it may cause PEEP.

A positive pressure relief valve, which is preset at 5cm H_2O, will prevent a positive pressure build-up above this level in case the central vacuum system should fail. Waste gas will be expelled into the atmosphere if this condition occurs.

If the vacuum is set higher than necessary to evacuate the waste gas, a relief valve will allow ambient gas (air) to enter the scavenger system, when a sub-atmospheric pressure of -0.5cm H_2O is created. A back-up valve will be activated at -1.8cm H_2O, if the primary relief valve should fail.

VAPOR VAPORIZER 19.1

WARNING

THE ENCLOSED MATERIAL IS FOR INFORMATION ONLY!

NEVER ATTEMPT TO OPEN A VAPOR VAPORIZER
NEVER ATTEMPT TO CALIBRATE A VAPOR VAPORIZER
NEVER ATTEMPT TO REPAIR A VAPOR VAPORIZER
ALWAYS SEND VAPOR VAPORIZERS WHICH REQUIRE SERVICE TO
NORTH AMERICAN DRAGER TECHNICAL SERVICE DEPARTMENT

VAPOR 19.1

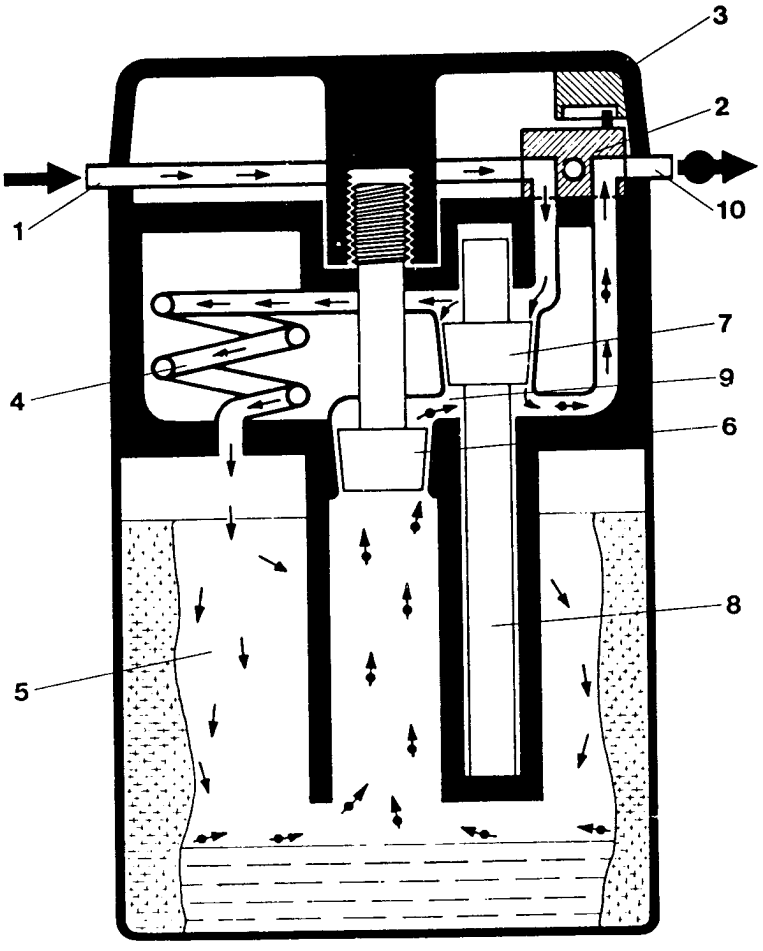

1. fresh gas inlet
2. turn on and turn off control (actuated by concentration knob)
3. concentration knob
4. pressure compensation (patented)
5. vaporizing chamber
6. control cone
7. vaporizing chamber, by-pass cone
8. expansion member for temperature compensation
9. mixing chamber
10. fresh gas outlet

FRESH GAS

FRESH GAS WITH ANESTHETIC VAPOR

VAPORIZER GAS FLOW

When the concentration knob (3) is in the 0 (zero) position, the ON/OFF switch (2) is closed. The gas mixture enters the vaporizer at fresh gas inlet (1) and leaves through the fresh gas outlet (10) without entering the interior of the vaporizer.

When concentration knob (3) is turned to any volume% concentration above 0.2 volume%, the ON/OFF switch (2) automatically opens and allows the fresh gas to enter the interior of the vaporizer.

The gas is immediately divided and follows 2 (two) different routes. One part of the fresh gas moves through a thermostatically controlled by-pass (7), which compensates for temperature changes and maintains the correct volume% concentration vapor output as selected with concentration knob (3). The other part of the fresh gas moves through a pressure compensator (4), which prevents pressure changes that occur upstream or downstream of the vaporizer to be transmitted into the vaporizer and thus effect the volume% vapor output. From the pressure compensator the gas continues into the vaporizer chamber (5). This chamber contains the liquid anesthetic agent which is absorbed and evaporated by a special wick assembly. As the fresh gas moves through the vaporizing chamber, it is fully saturated with anesthetic vapor. The staurated gas leaves the chamber through control cone (6). The cone is adjustable with concentration knob (3). The saturated gas and the fresh gas which did not move through the vaporizing chamber are combined and leave through fresh gas outlet (10).

The combination of the by-pass opening (7) and the control cone opening (6) determines the volume% vapor output. Other factors as discussed in the following paragraphs have also an effect on the correct vapor concentration.

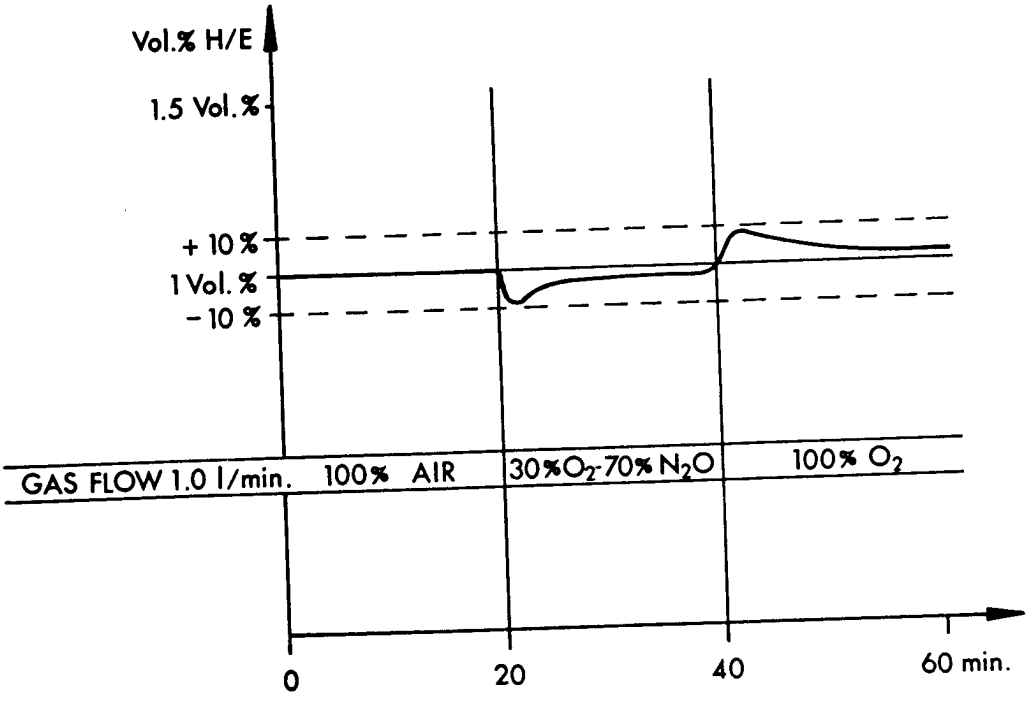
Vol.% H/E
1.5 Vol.%
+ 10 %
1 Vol. %
- 10 %
GAS FLOW 1.0 l/min.
100% AIR
30%O2-70% N2O
100% O2
0
20
40
60 min.

EFFECTS OF DIFFERENT GAS MIXTURES ON VOLUME% CONCENTRATION

All Vapor vaporizers 19.1 are calibrated with air by the manufacturer. Since most vaporizers are operated with pure oxygen or oxygen/nitrous oxide mixtures, the volume% vapor output is effected.

A Vapor vaporizer which is set to 1.0 volume% concentration at a gas flow of 1 l/min, will show the following characteristics:

GAS FLOW - AIR

Concentration constant at 1.0 volume% output

GAS FLOW - 30% O_2 & 70% N_2O

Concentration will sharply drop and then remain slightly below 1.0 volume% output

GAS FLOW - 100% O_2

Concentration will sharply rise and remain slightly above 1.0 volume% output

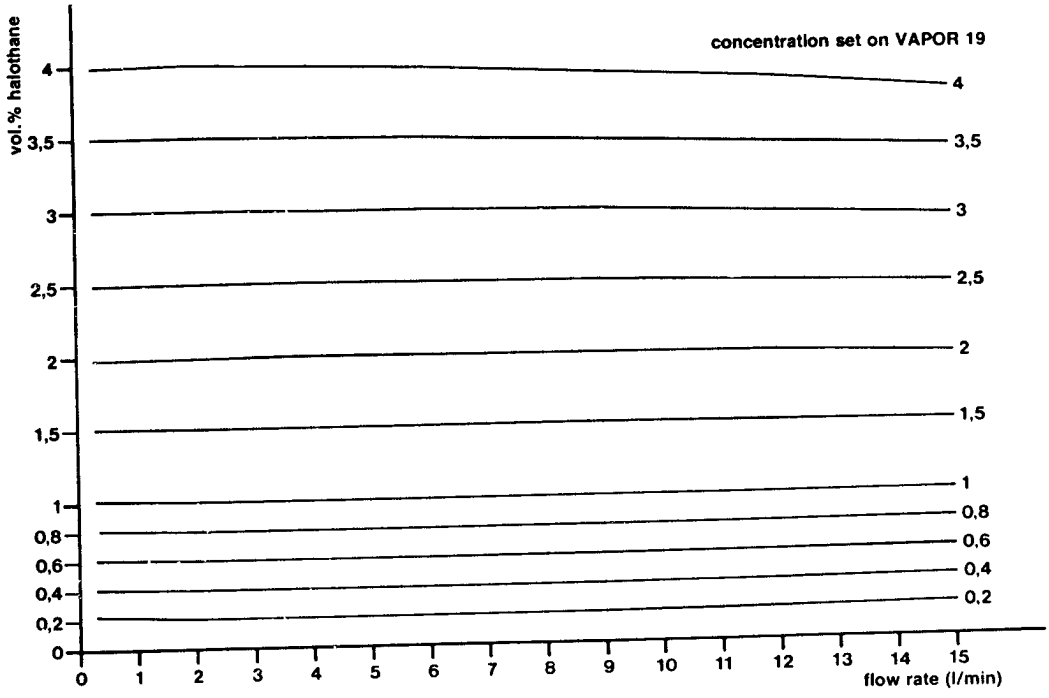
concentration set on VAPOR 19
vol.% halothane
4
3,5
3
2,5
2
1,5
1
0,8
0,6
0,4
0,2
0
0 1 2 3 4 5 6 7 8 9 10 11 12 13 14 15
flow rate (l/min)

EFFECTS OF FRESH GAS FLOWRATE ON VOLUME% CONCENTRATION

While Vapor 19.1 vaporizers produce a relative constant volume% concentration at fresh gas flowrates between 2 and 10 l/min, the following observation can be made at gas flows below 2 l/min or above 10 l/min:

GAS FLOW LESS THAN 2 L/MIN

Slight increase of volume% concentration up to 1.0 volume%. Constant concentration from 1.0 to 4.0 volume% concentration

GAS FLOW HIGHER THAN 10 L/MIN

Basically constant volume% concentration up to 1.5 volume%. Gradual decrease of vapor output as volume% concentration setting is increased.

A decrease of volume% concentration between 3.0 and 4 volume% may already be noticable at flowrates of less than 10 l/min.

SCHEMATICS AND DIAGRAMS

ANESTHESIA SYSTEM
WITH PATIENT BREATHING CIRCUIT

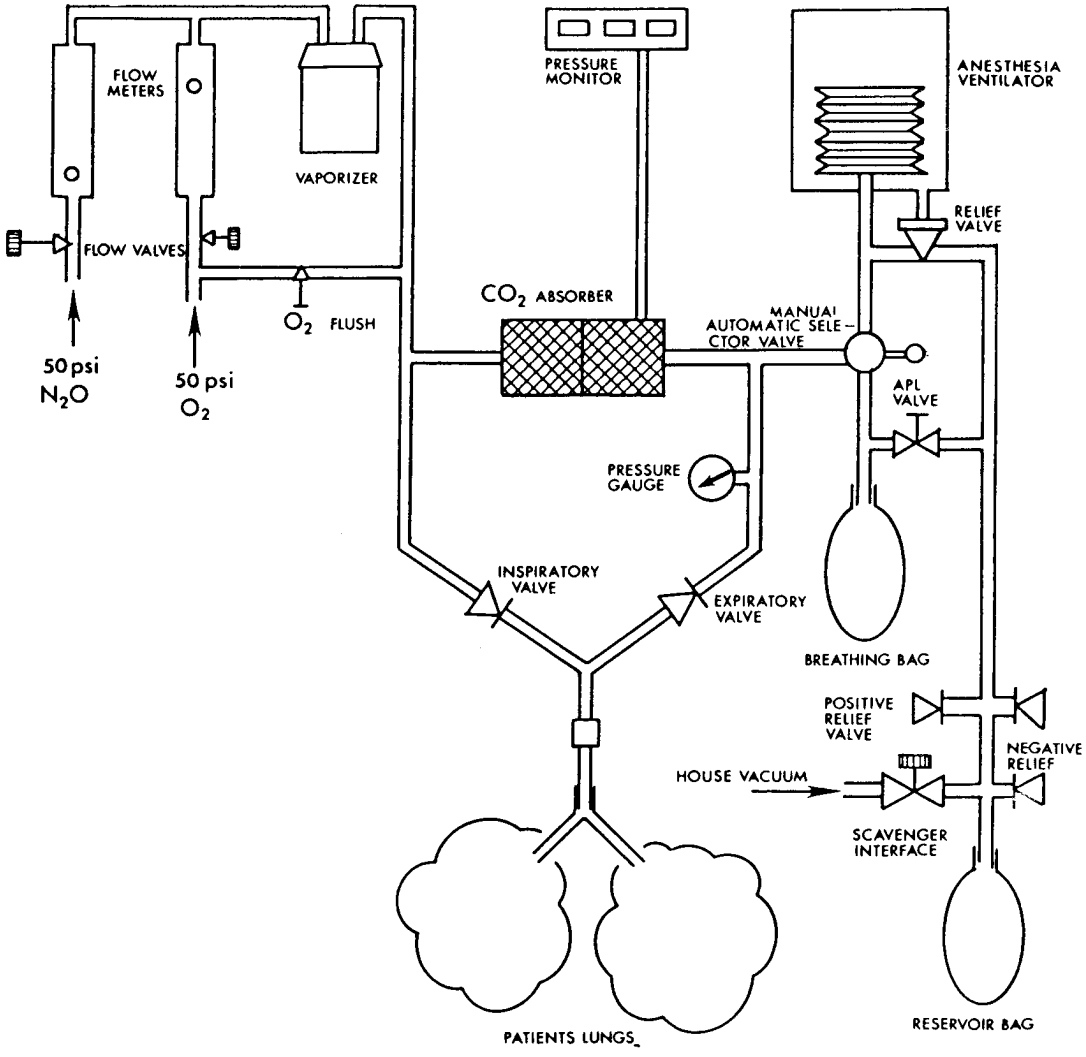

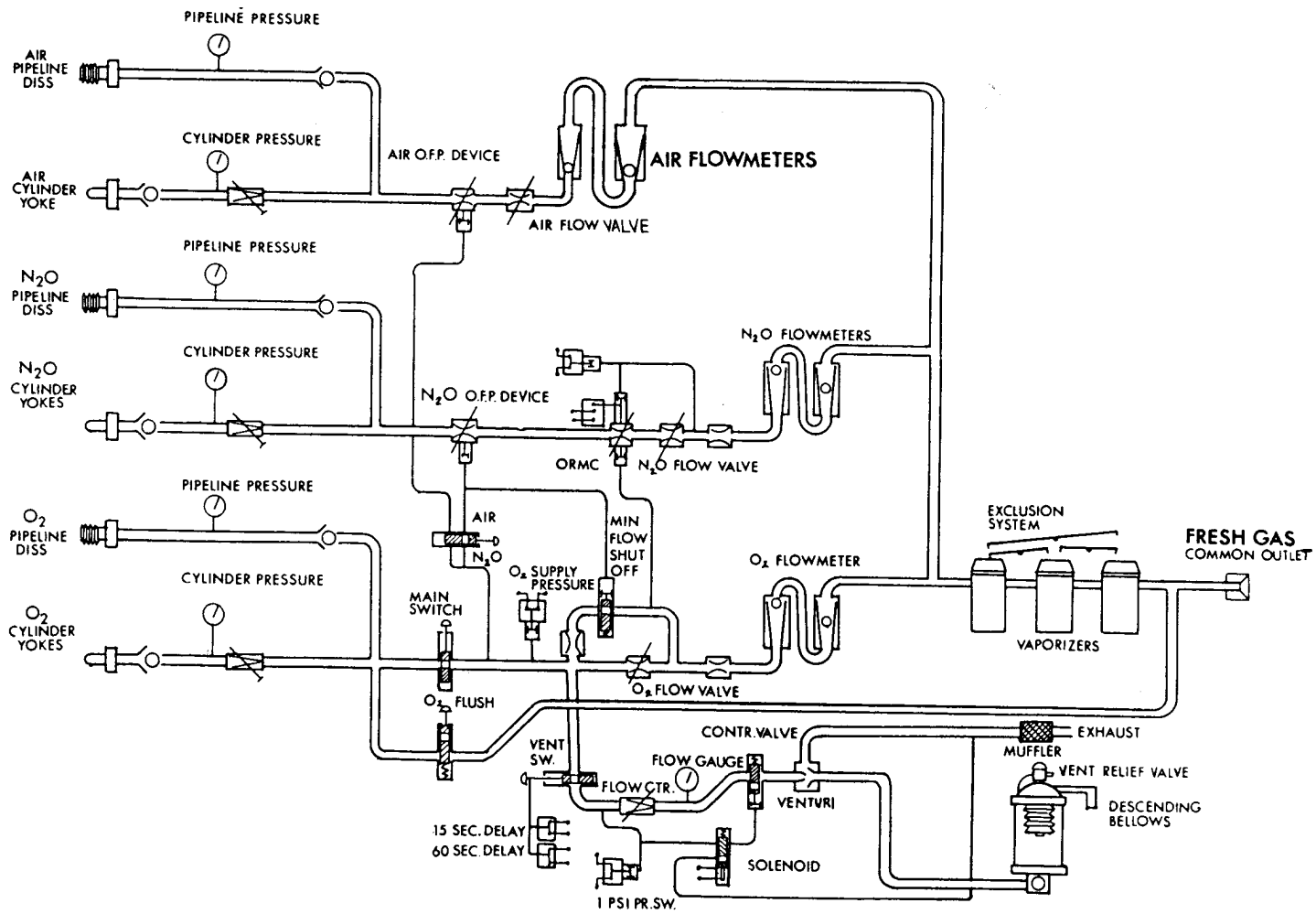

PIPING DIAGRAM
NARKOMED 2A

NARKOMED STANDARD
2 Gas, 2 Yoke

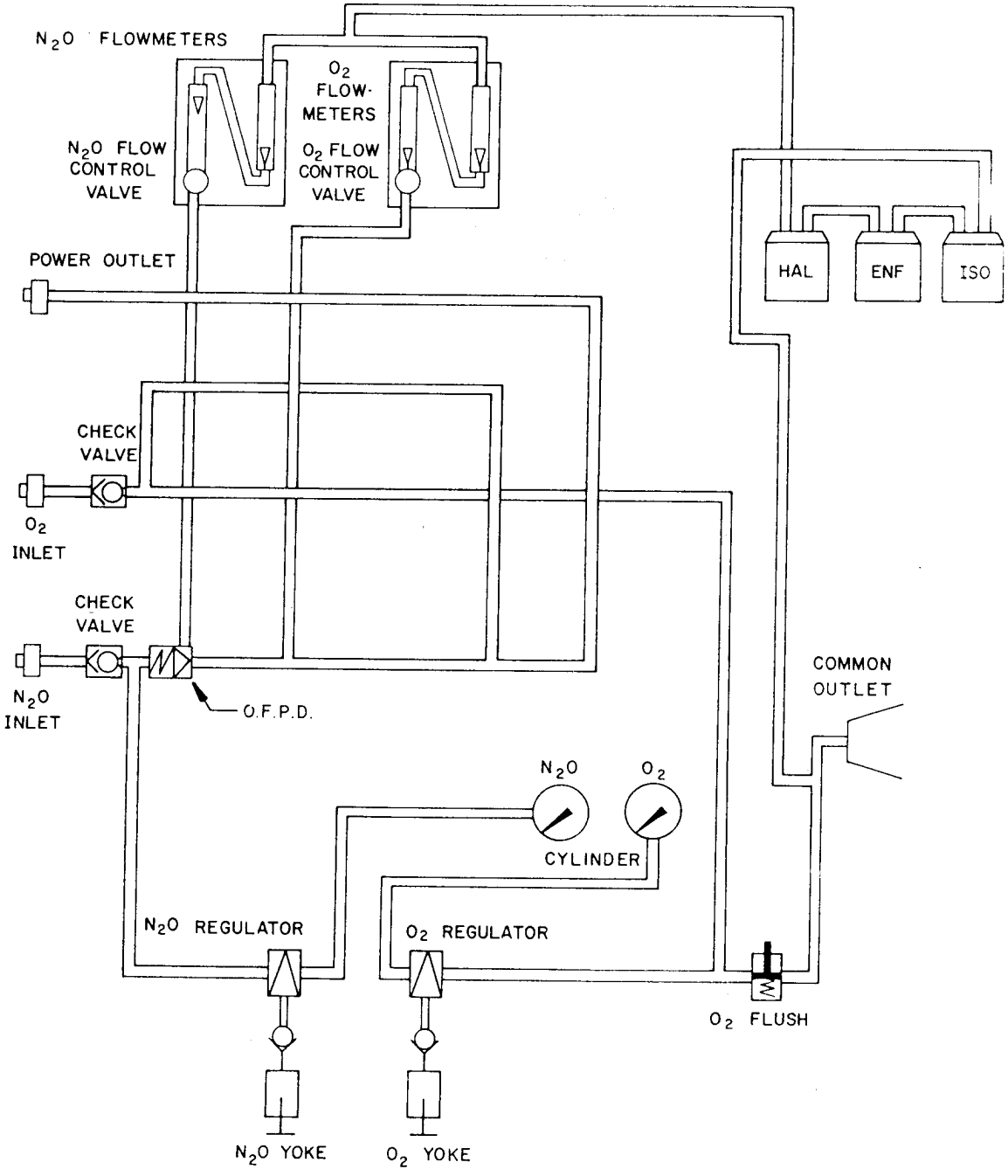

AIR ATTACHMENT, DISS/YOKE

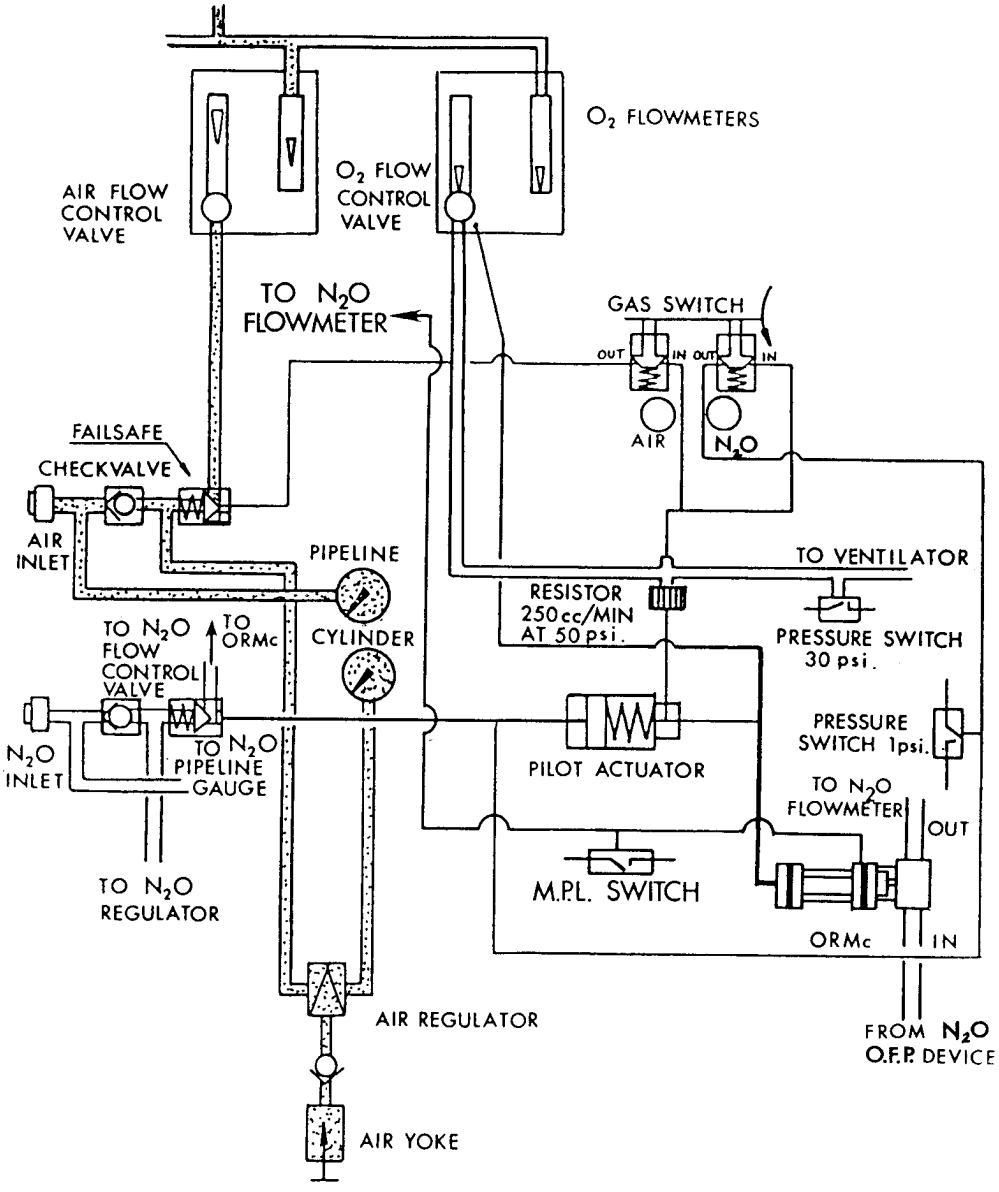

3 VAPOR EXCLUSION SYSTEM

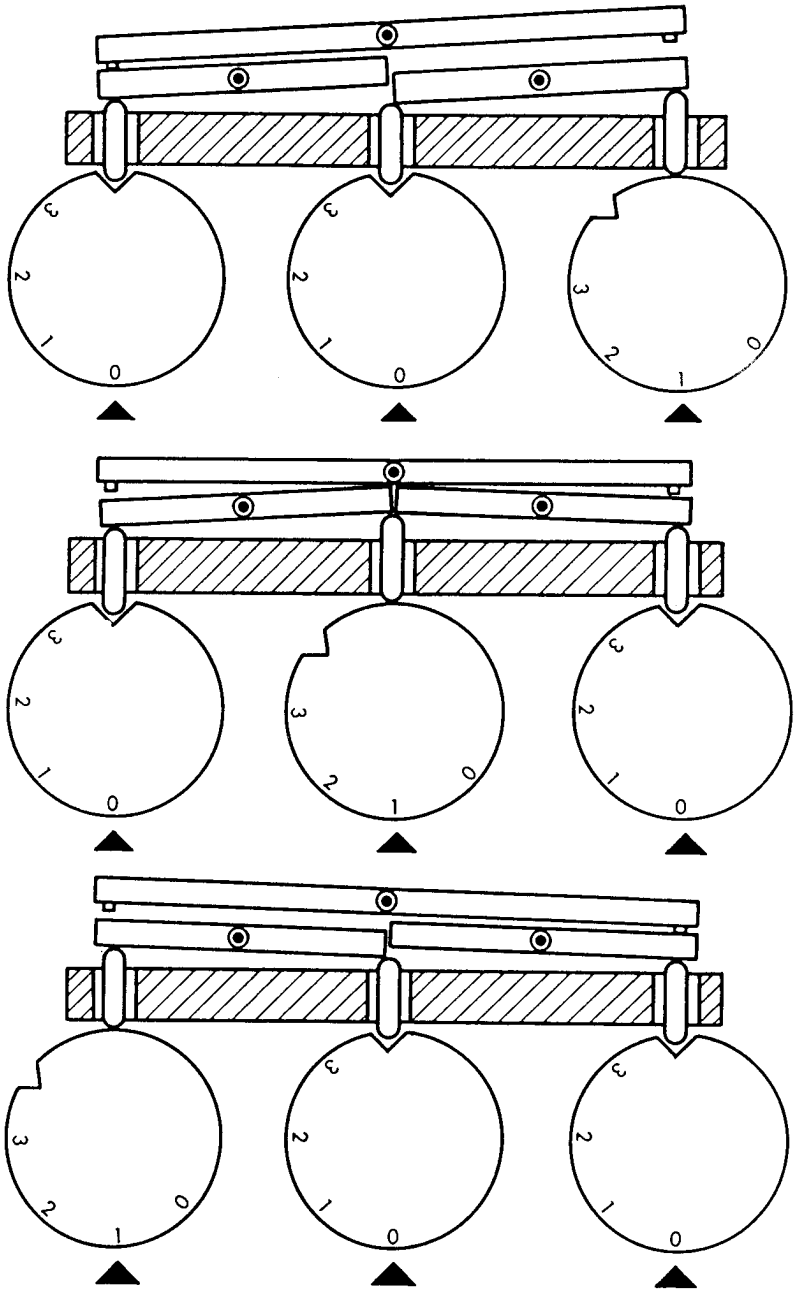

PIPING DIAGRAM FOR NARKOMED STANDARED
(Copper Kettle)

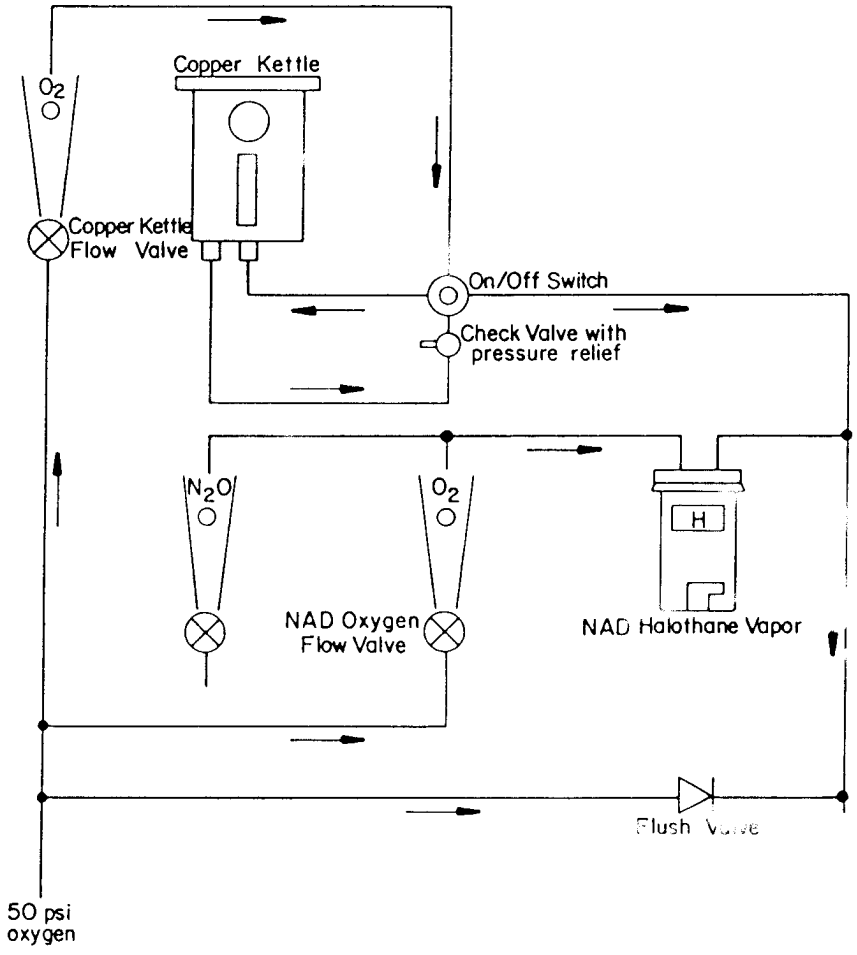

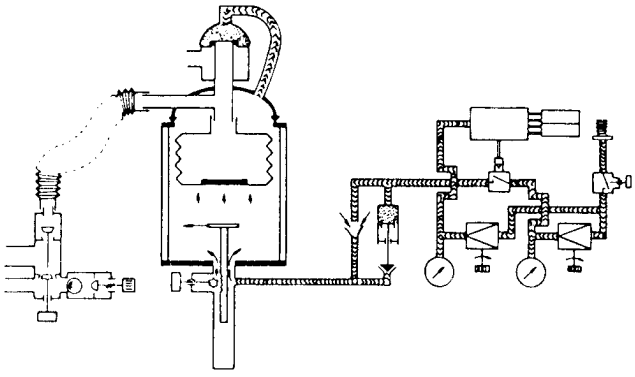

INSPIRATORY FLOW TIME

EXPIRATORY FLOW TIME

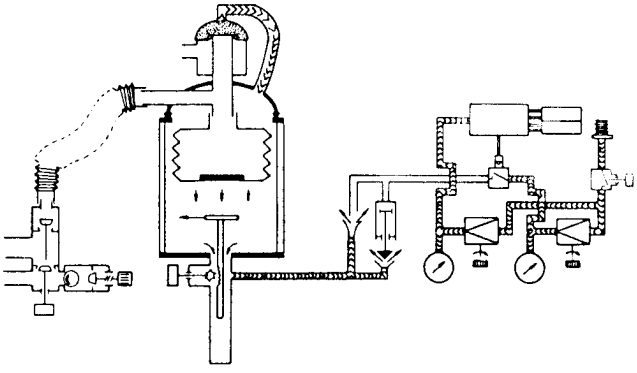

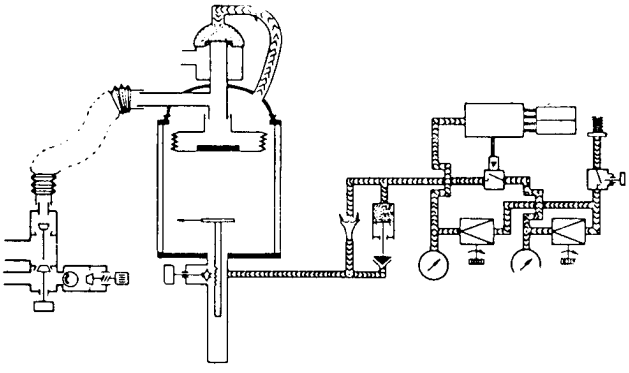

INSPIRATORY PAUSE TIME

EXPIRATORY PAUSE TIME

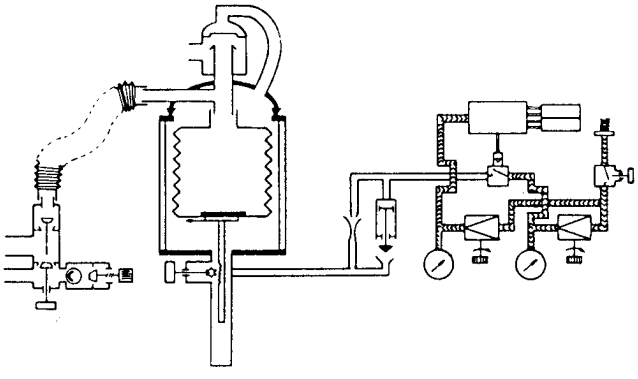

DRAGER AV 16 - 18 BPM

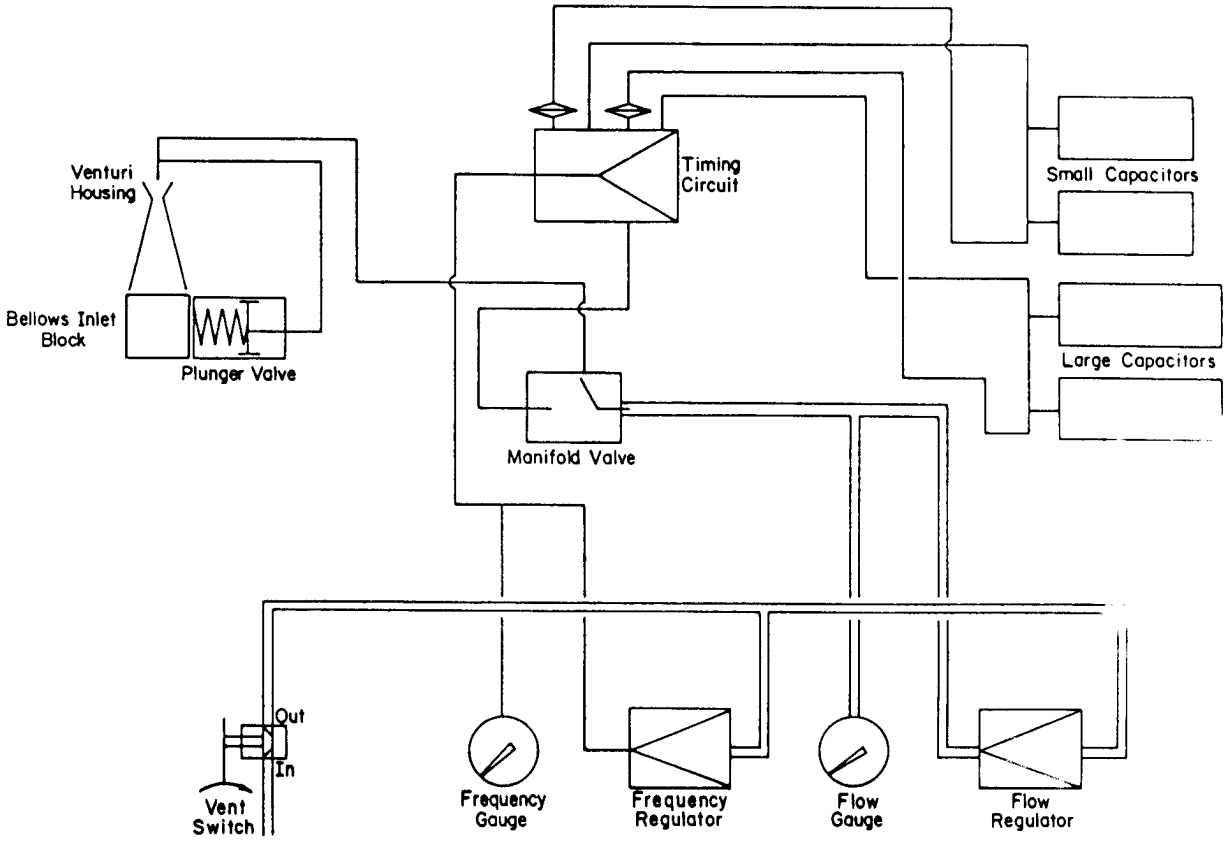

DRAGER AV 10 - 30 BPM
9 - 25 BPM

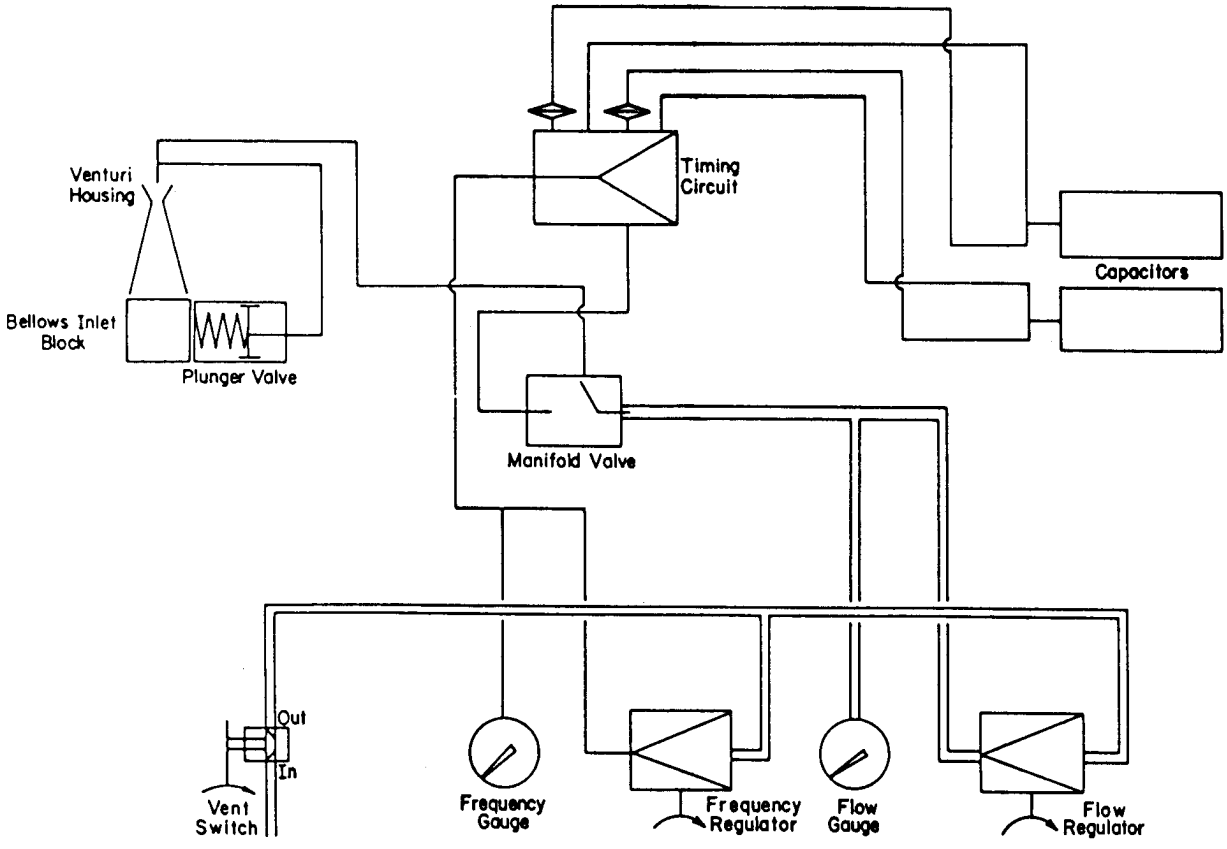

DRAGER AV / FREQUENCY DIVIDER

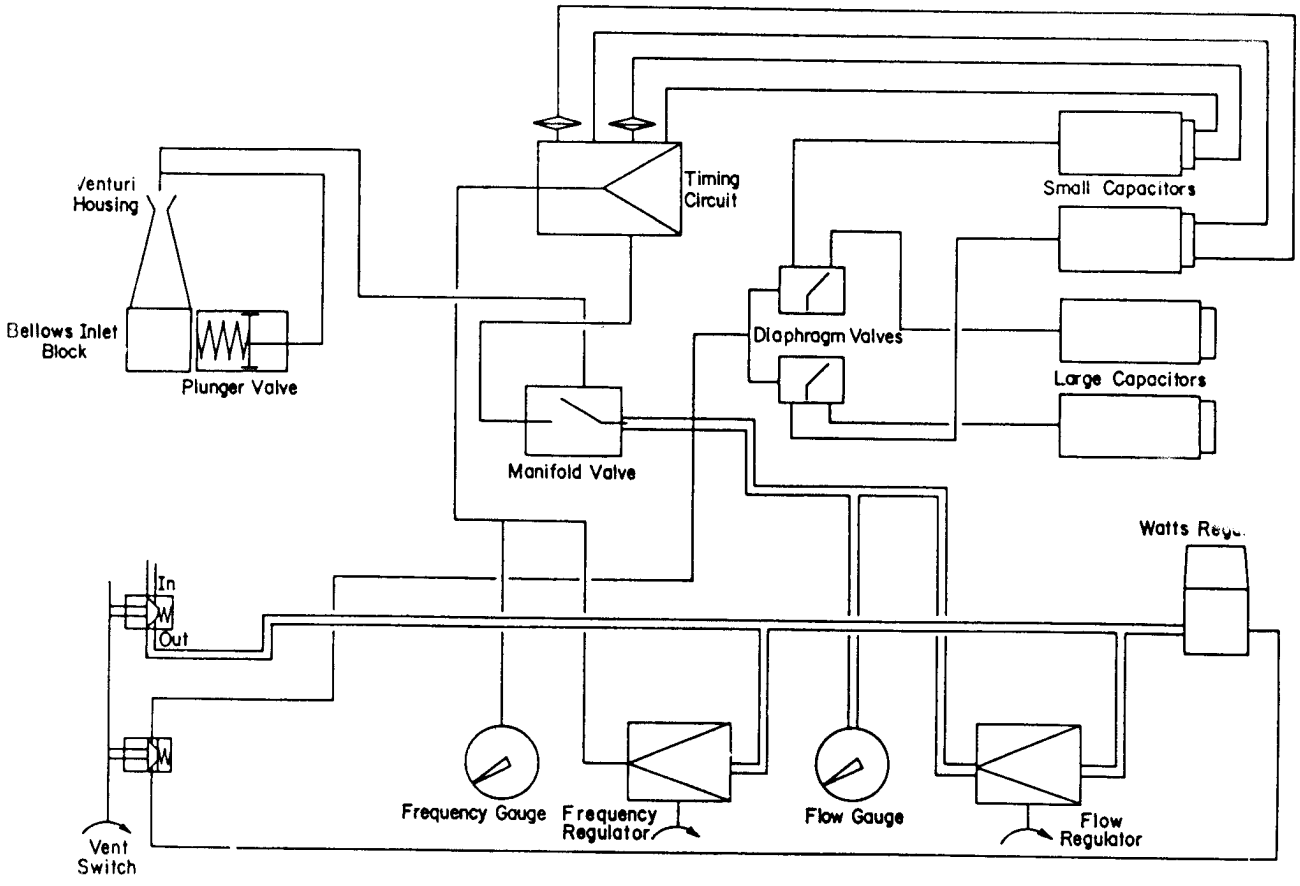

DPM II

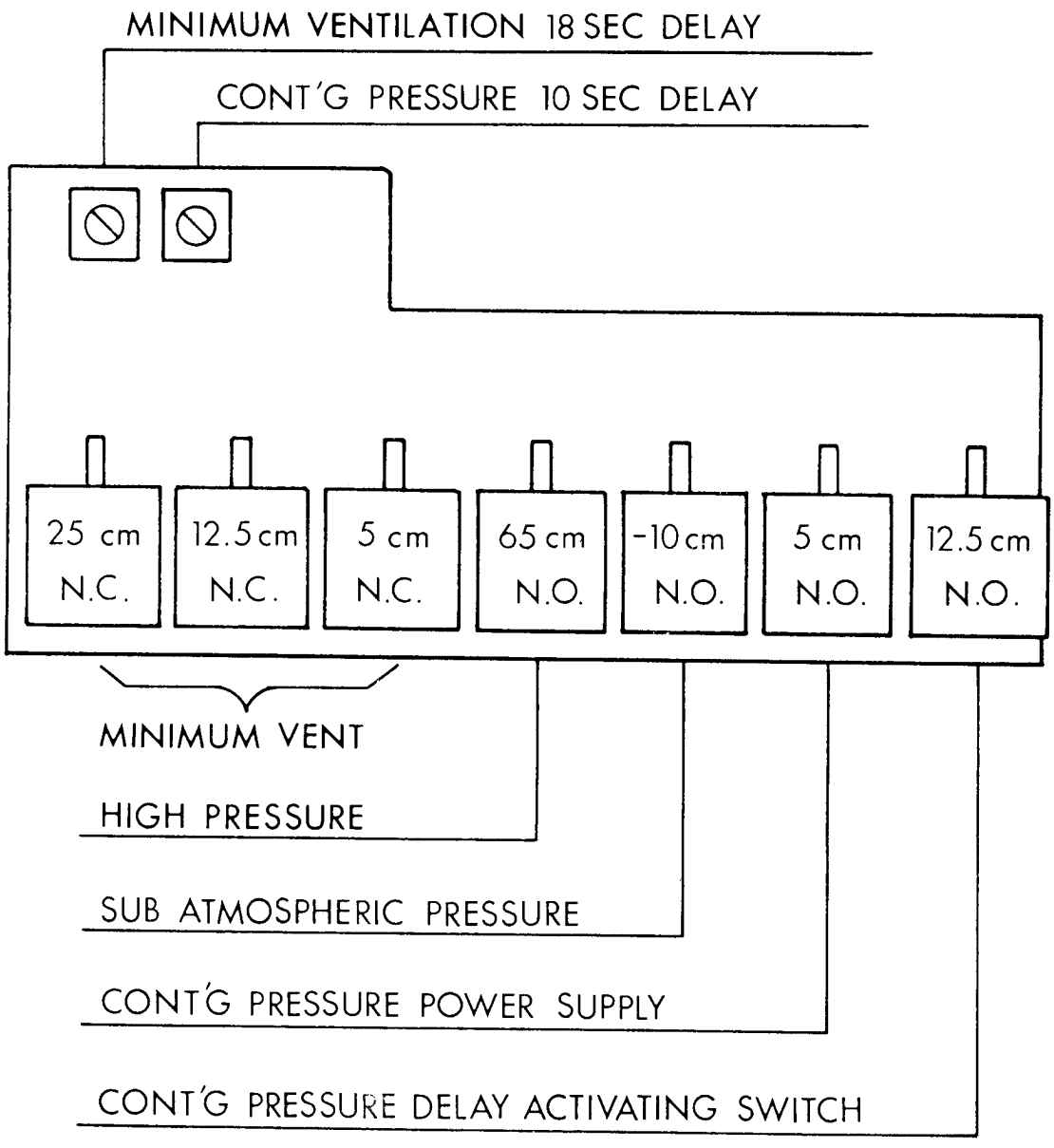
MINIMUM VENTILATION 18 SEC DELAY
CONT'G PRESSURE 10 SEC DELAY
25 cm N.C.
12.5 cm N.C.
5 cm N.C.
65 cm N.O.
-10 cm N.O.
5 cm N.O.
12.5 cm N.O.
MINIMUM VENT
HIGH PRESSURE
SUB ATMOSPHERIC PRESSURE
CONT'G PRESSURE POWER SUPPLY
CONT'G PRESSURE DELAY ACTIVATING SWITCH

DPM-S

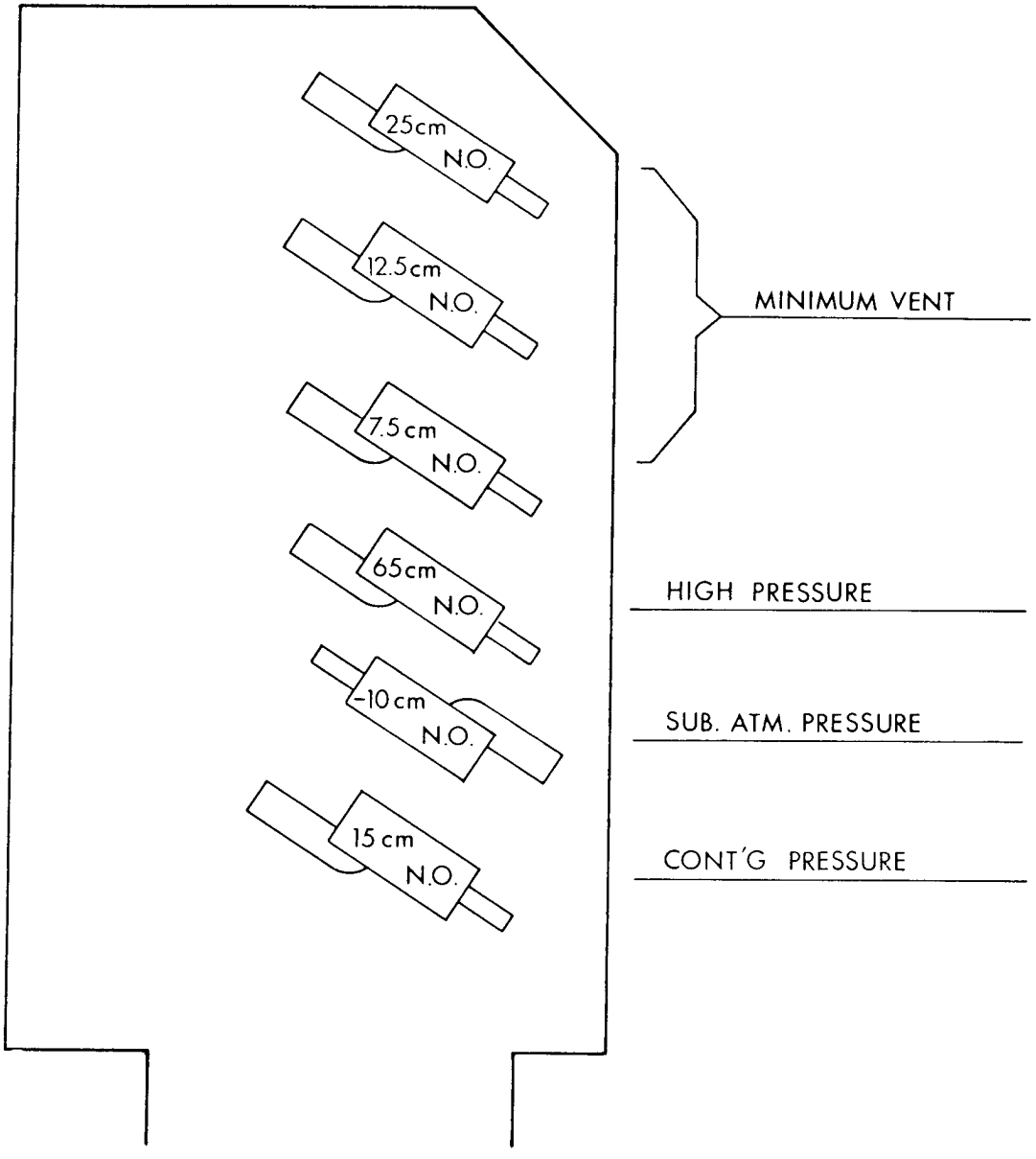
25cm
N.O.
12.5cm
N.O.
7.5cm
N.O.
65cm
N.O.
-10cm
N.O.
15cm
N.O.
MINIMUM VENT
HIGH PRESSURE
SUB. ATM. PRESSURE
CONT'G PRESSURE

AM III

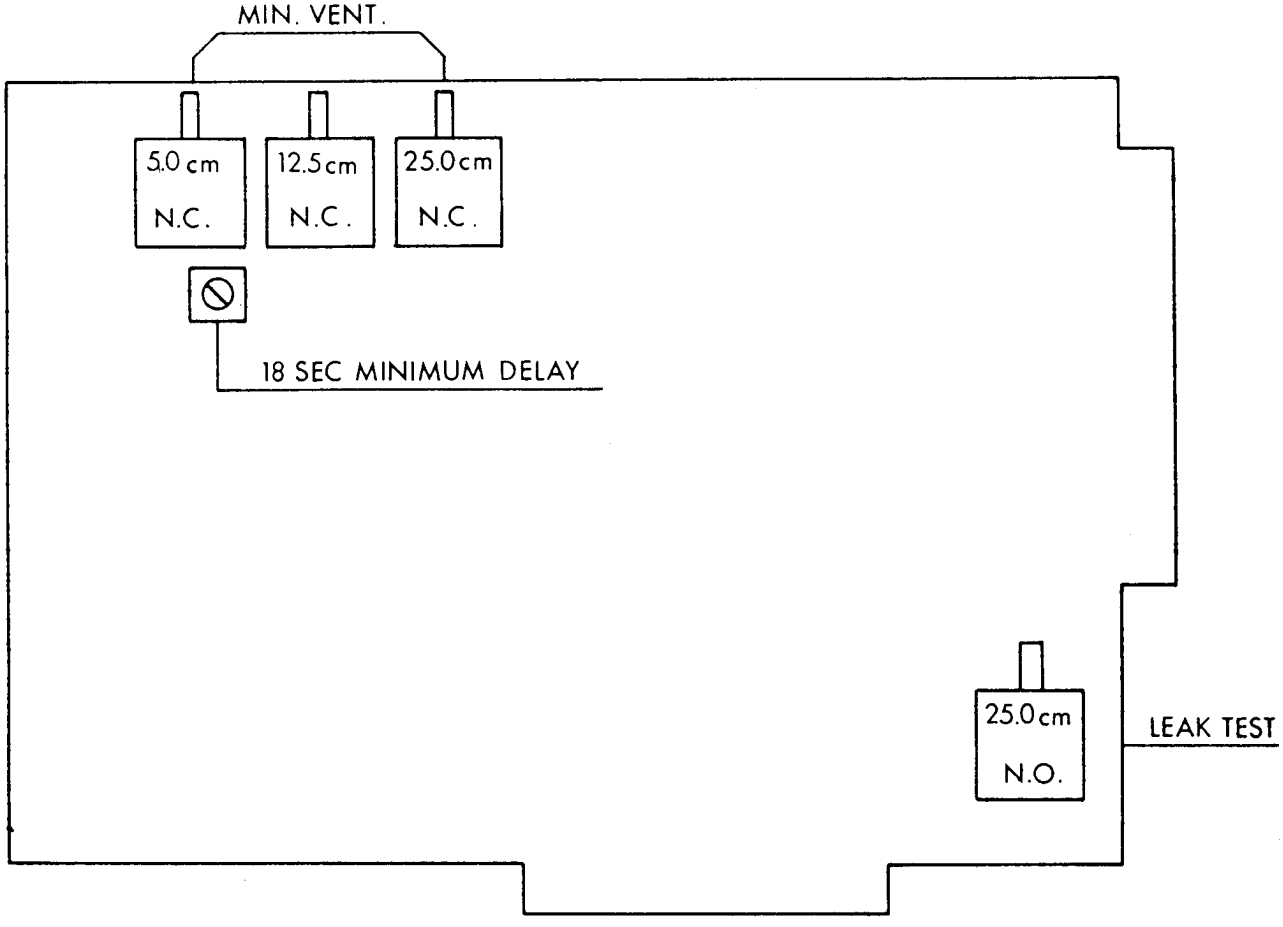
MIN. VENT.
5.0 cm
N.C.
12.5 cm
N.C.
25.0 cm
N.C.
18 SEC MINIMUM DELAY
25.0 cm
N.O.
LEAK TEST

NARKOMED II - CODE I

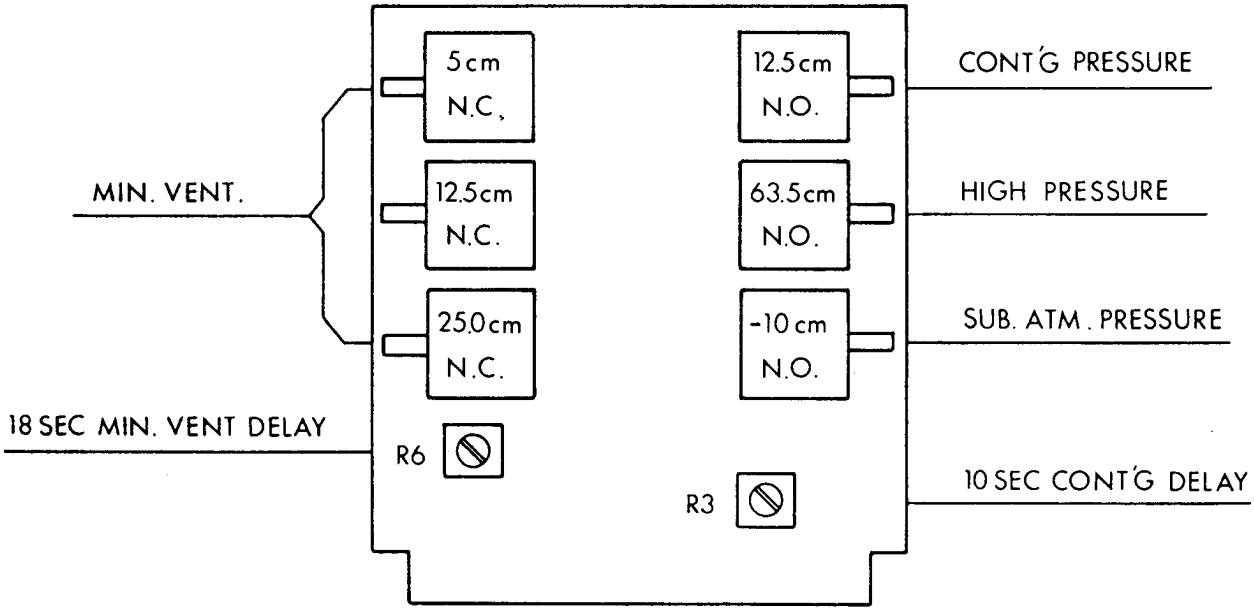

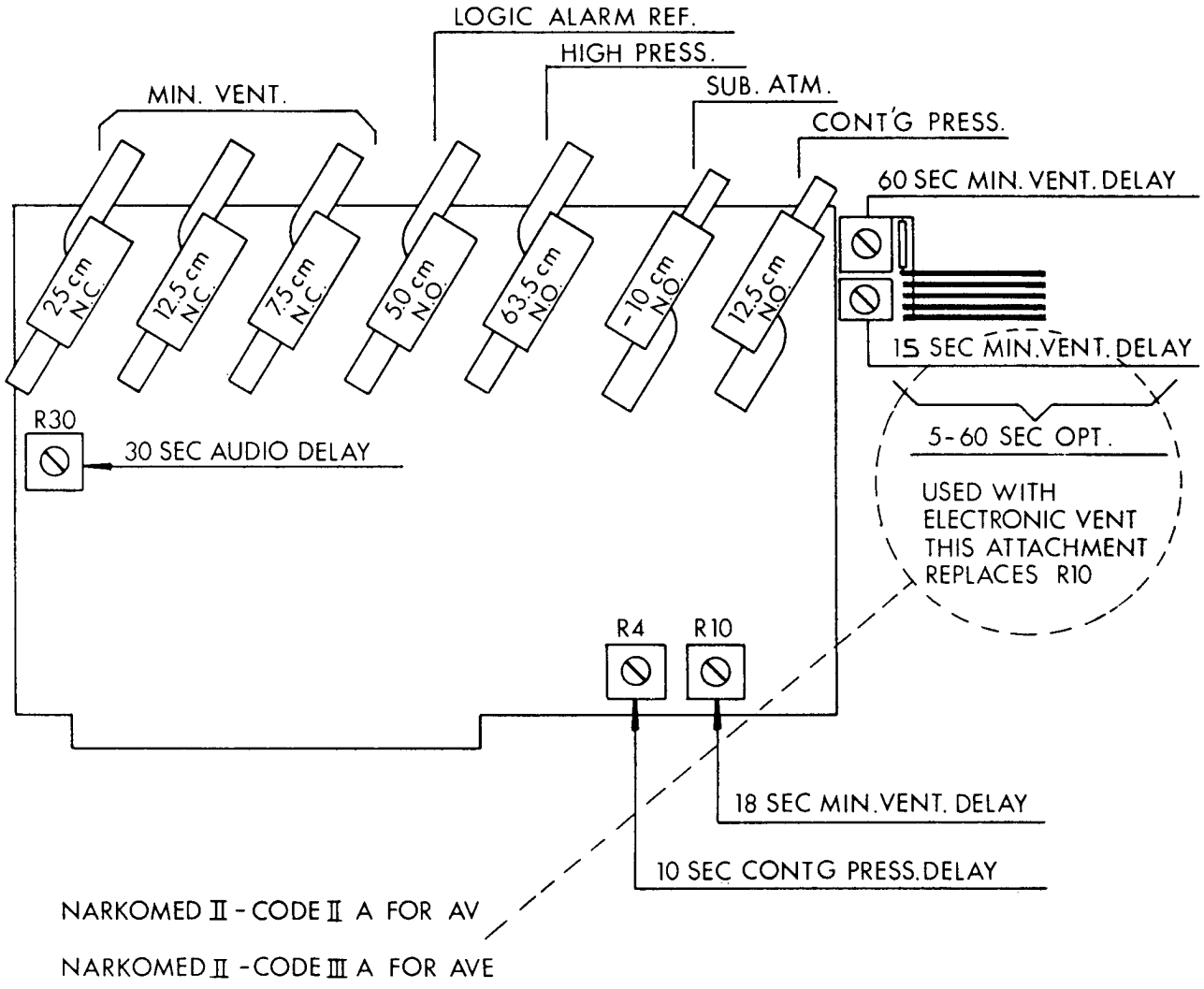
LOGIC ALARM REF.
HIGH PRESS.
SUB. ATM.
CONT'G PRESS.
MIN. VENT.
60 SEC MIN. VENT. DELAY
25 cm N.C.
12.5 cm N.C.
7.5 cm N.C.
50 cm N.O.
63.5 cm N.O.
-10 cm N.O.
12.5 cm N.O.
15 SEC MIN.VENT. DELAY
R30
30 SEC AUDIO DELAY
5-60 SEC OPT.
USED WITH ELECTRONIC VENT THIS ATTACHMENT REPLACES R10
R4
R10
18 SEC MIN.VENT. DELAY
10 SEC CONTG PRESS.DELAY
NARKOMED II - CODE II A FOR AV
NARKOMED II - CODE III A FOR AVE

PRINTED CIRCUIT BOARD ASSEMBLY - NM2A

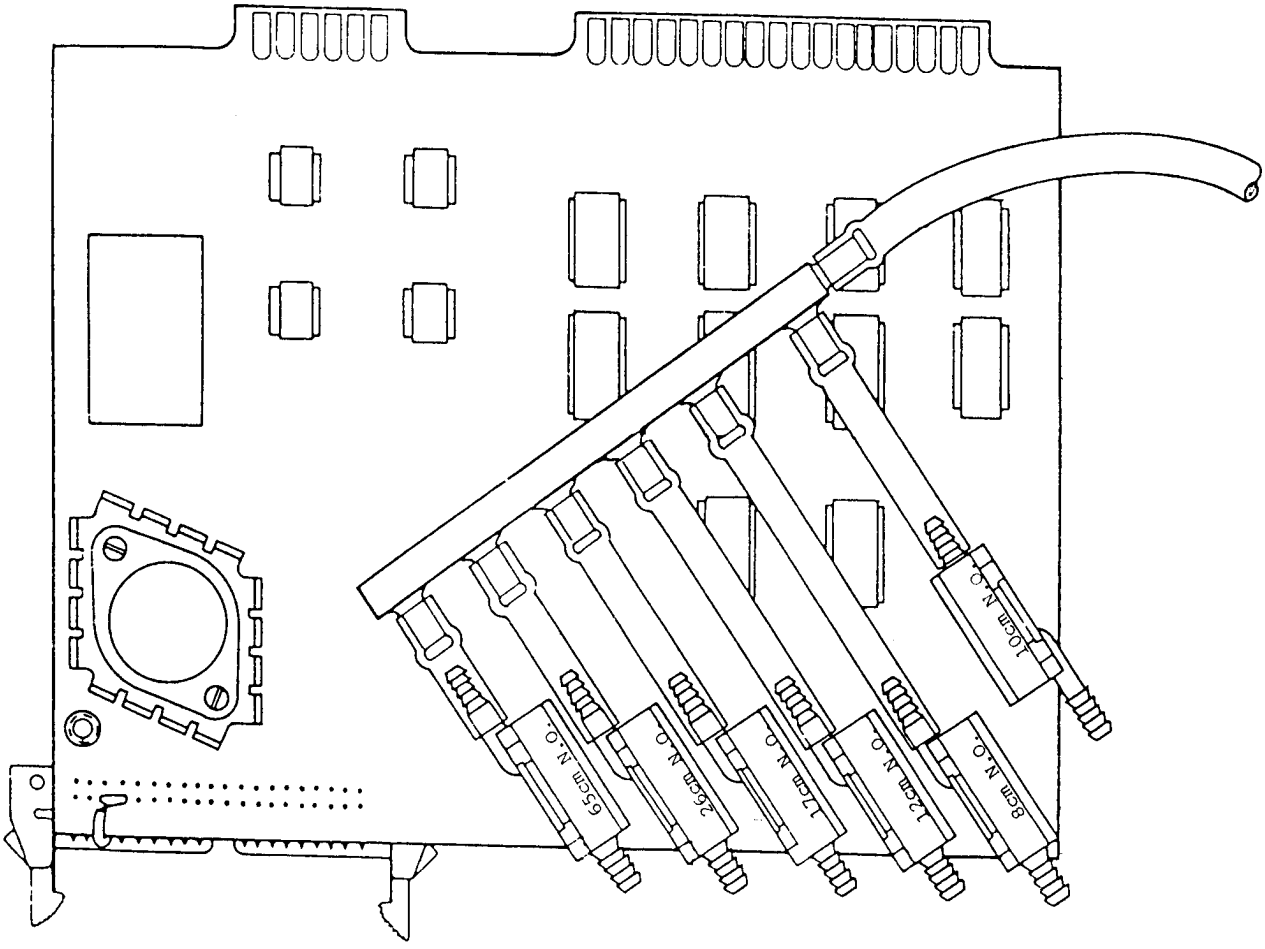

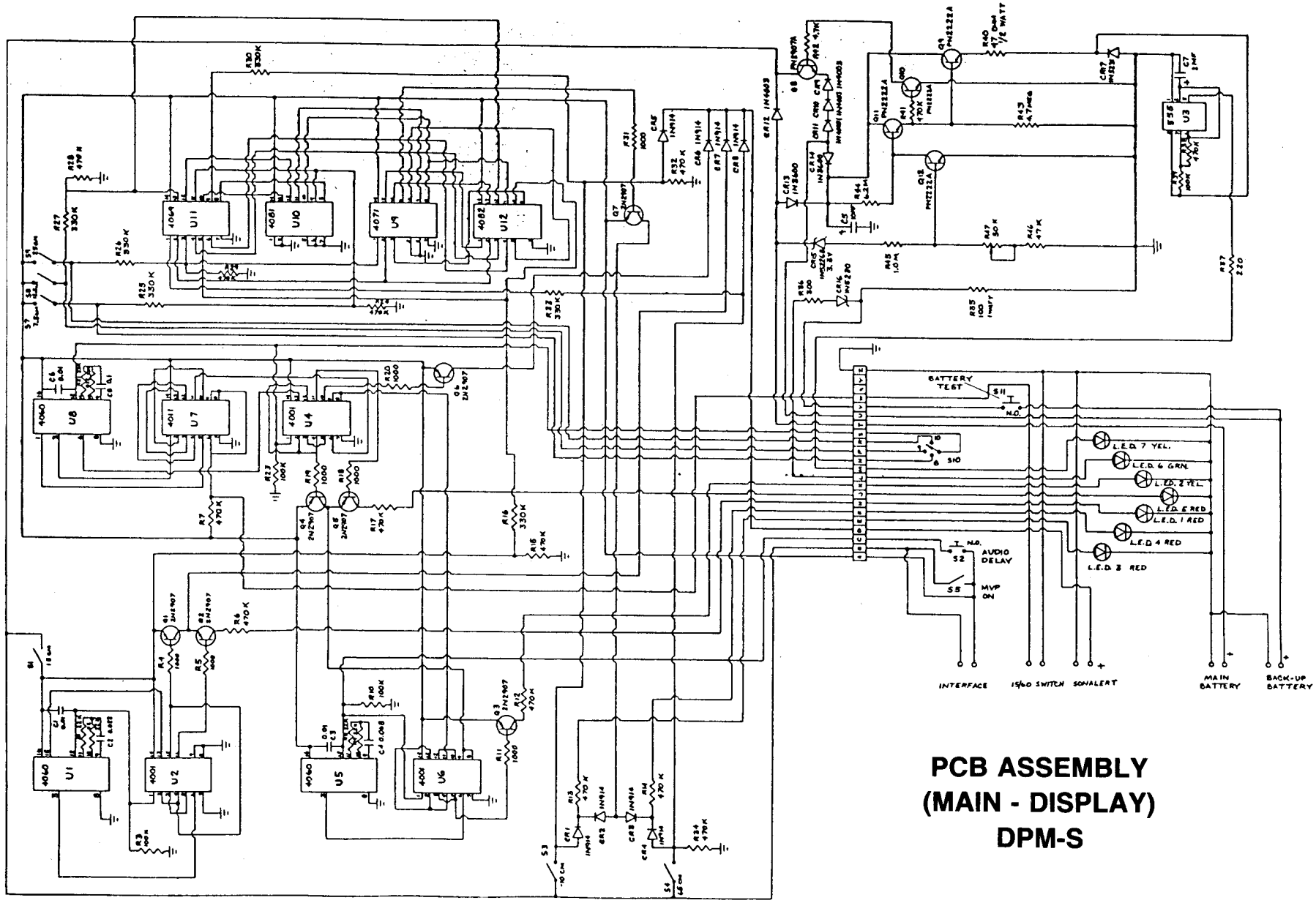

PCB ASSEMBLY (MAIN - DISPLAY) DPM-S

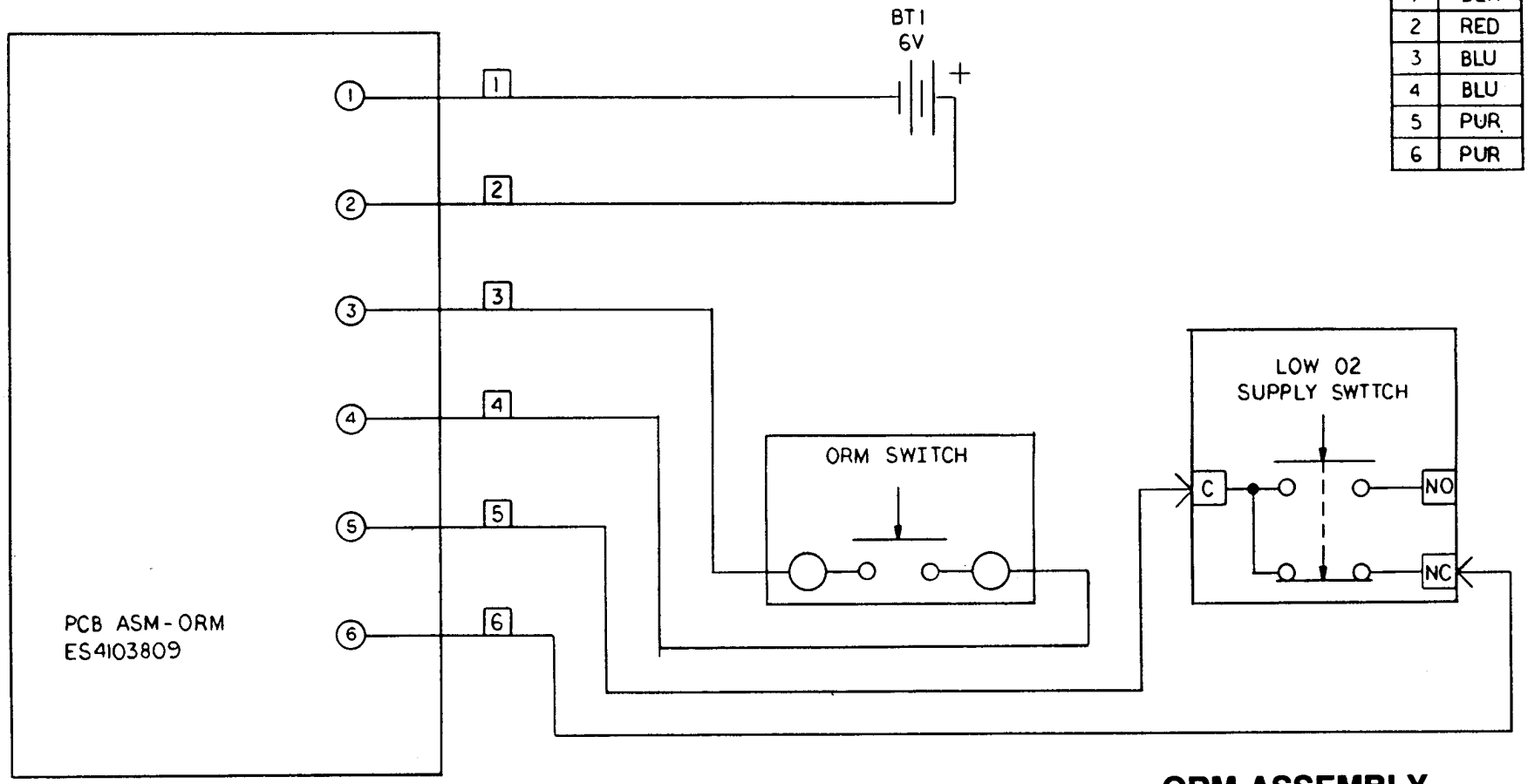

TAG NO	WTRE COLOR
1	BLK
2	RED
3	BLU
4	BLU
5	PUR
6	PUR

ORM ASSEMBLY

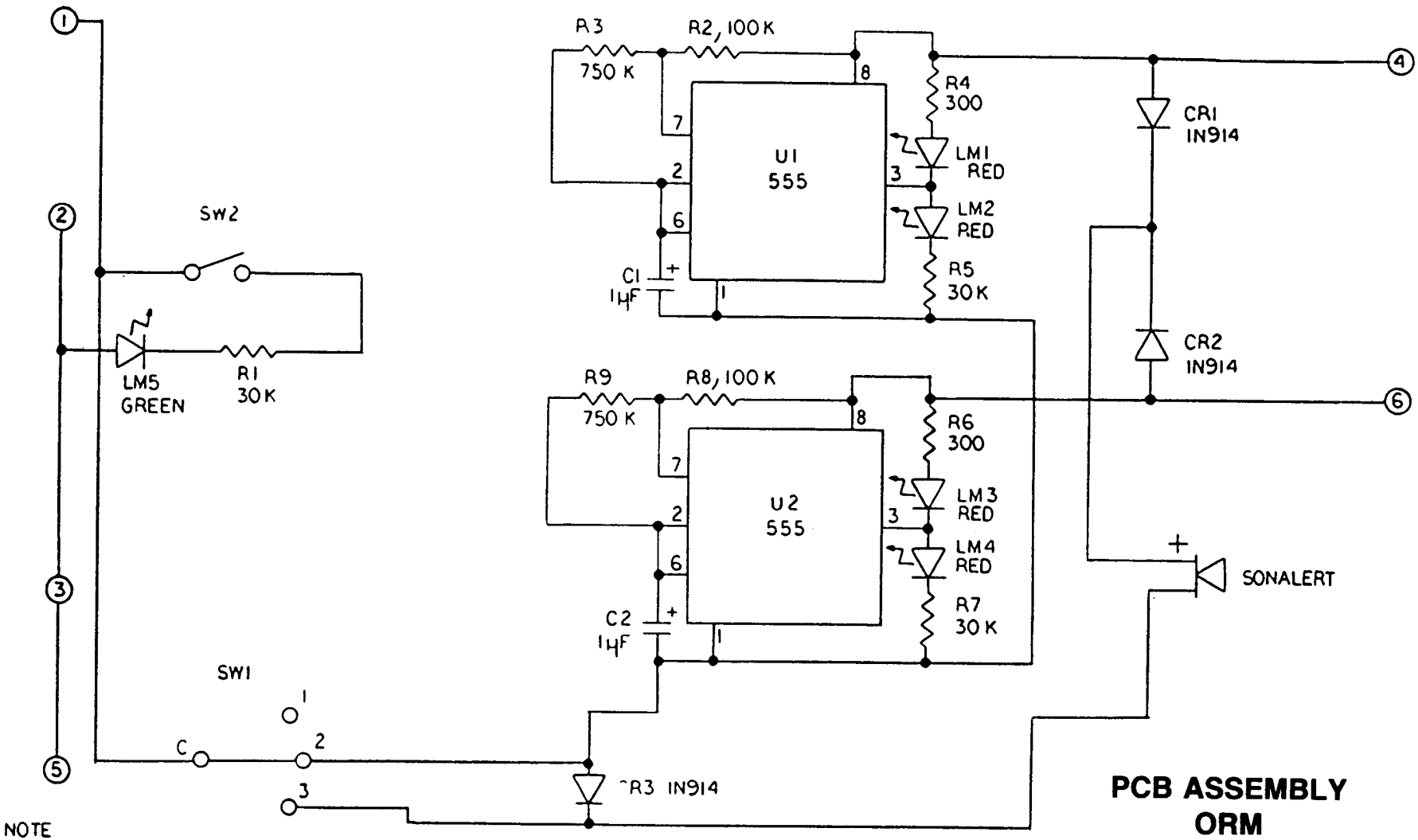

NOTE
ALL RESISTORS ARE 1/4 WATT, 5% TOL., CARBON FILM UNLESS OTHERWISE SPECIFIED

PCB ASSEMBLY
ORM

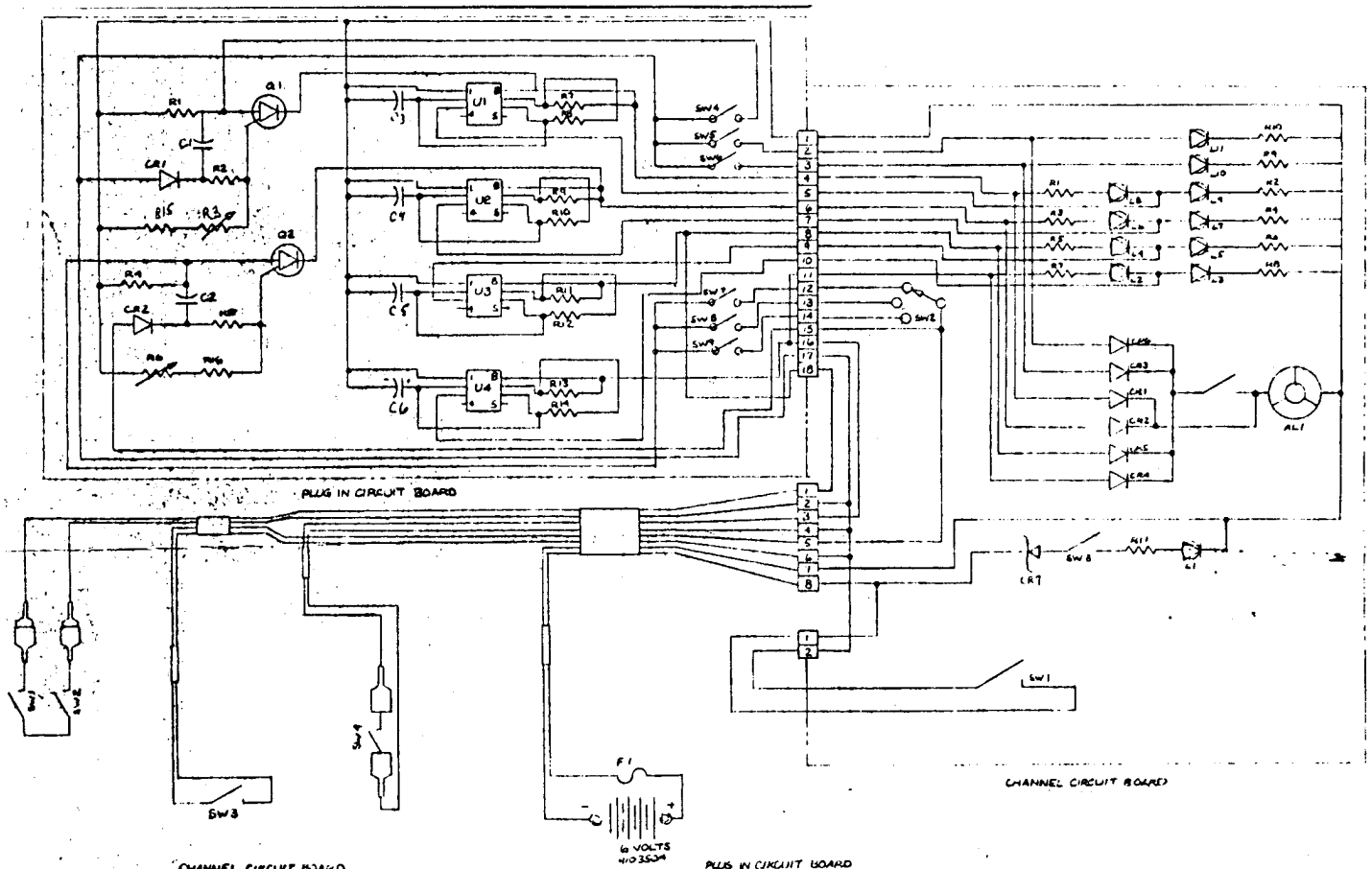

CHANNEL CIRCUIT BOARD

CODE	DESCRIPTION	PART NO.	TOLERANCE	VALUE	NOTES
R1, R3, R5, R7	RESISTOR		± 5%	300 OHMS	
R2, R4, R6, R8	RESISTOR		± 5%	100 OHMS	
R9, R10, R11	RESISTOR		± 5%	100 OHMS	
CR1 - CR6	CRYSTAL DIODE	1N914			
SW1	ON OFF SWITCH				125 V AC
SW2	3 POSITION SWITCH	4103589			
SW3	PUSH BUTTON SWITCH				
L1	GREEN LIGHT EMITTING DIODE				
L2 - L11	RED LIGHT EMITTING DIODE				
AL1	SONALERT	4103422			
	MISC.				
SW1	ARM SWITCH	4103480			
SW2	DEHART SWITCH 2" N.C.	4103487			
SW3	ELECTRICAL SWITCH	4103491			
SW4	PRESSURE SWITCH	4103406		-30	
F1	FUSE	4103677		250 MILL amp	

PLUG IN CIRCUIT BOARD

CODE	DESCRIPTION	PART NO.	TOLERANCE	VALUE	NOTES
R1, R4, R5, R6	RESISTOR		± 5%	10 K	
R2, R5	RESISTOR		± 5%	33 K	
R3, R6	VARIABLE RESISTOR			0-500 K	
R7, R9, R11, R13	RESISTOR		± 5%	100 K	
R8, R10, R12, R14	RESISTOR		± 5%	470 K	
CR1, CR2	CRYSTAL DIODE	1N194			
Q1, Q2	TRANSISTOR	2N1027			
C1, C2	CAPACITOR			100 MF	25 VOLTS
U1 - U4	INTEGRATED CIRCUIT	UA555TC		8 PIN	
SW4	DEHART SWITCH 3" N.O.	4104326			
SW5	DEHART SWITCH 4" N.O.	4104327			
SW6	DEHART SWITCH 15" N.O.	4104334			
SW7	DEHART SWITCH 2" N.C.	4103487			
SW8	DEHART SWITCH 5" N.C.	4104324			
SW9	DEHART SWITCH 8" N.C.	4104325			
C3-C6	CAPACITOR			1 MF	5-55 VOLTS

CR7 Zener Diode 1N4131 A

NARKOMED II WIRING

NARKOMED 2
REV A ASSEMBLY
(ALARM CHANNEL)

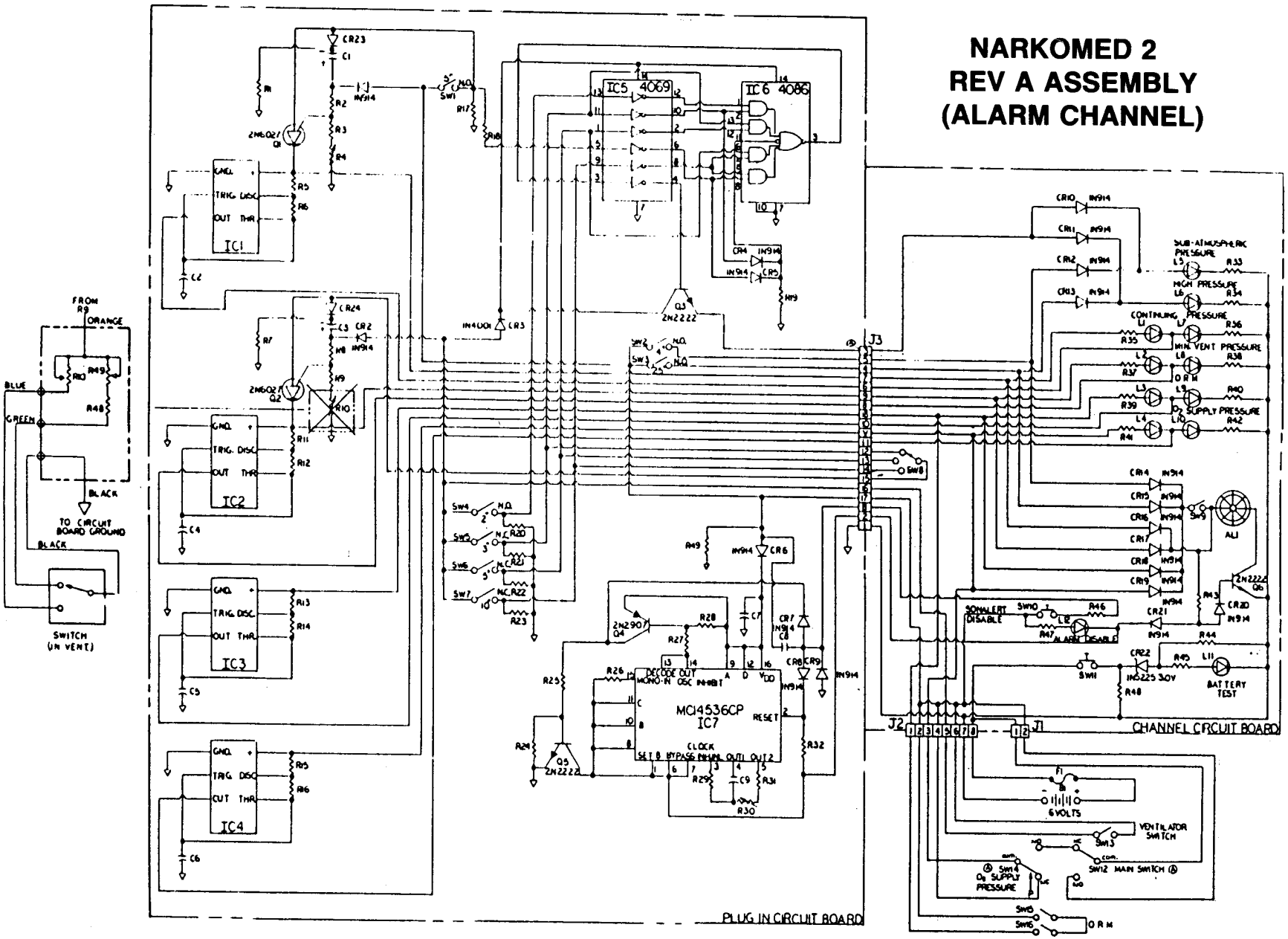

NARKOMED 2A ASSEMBLY

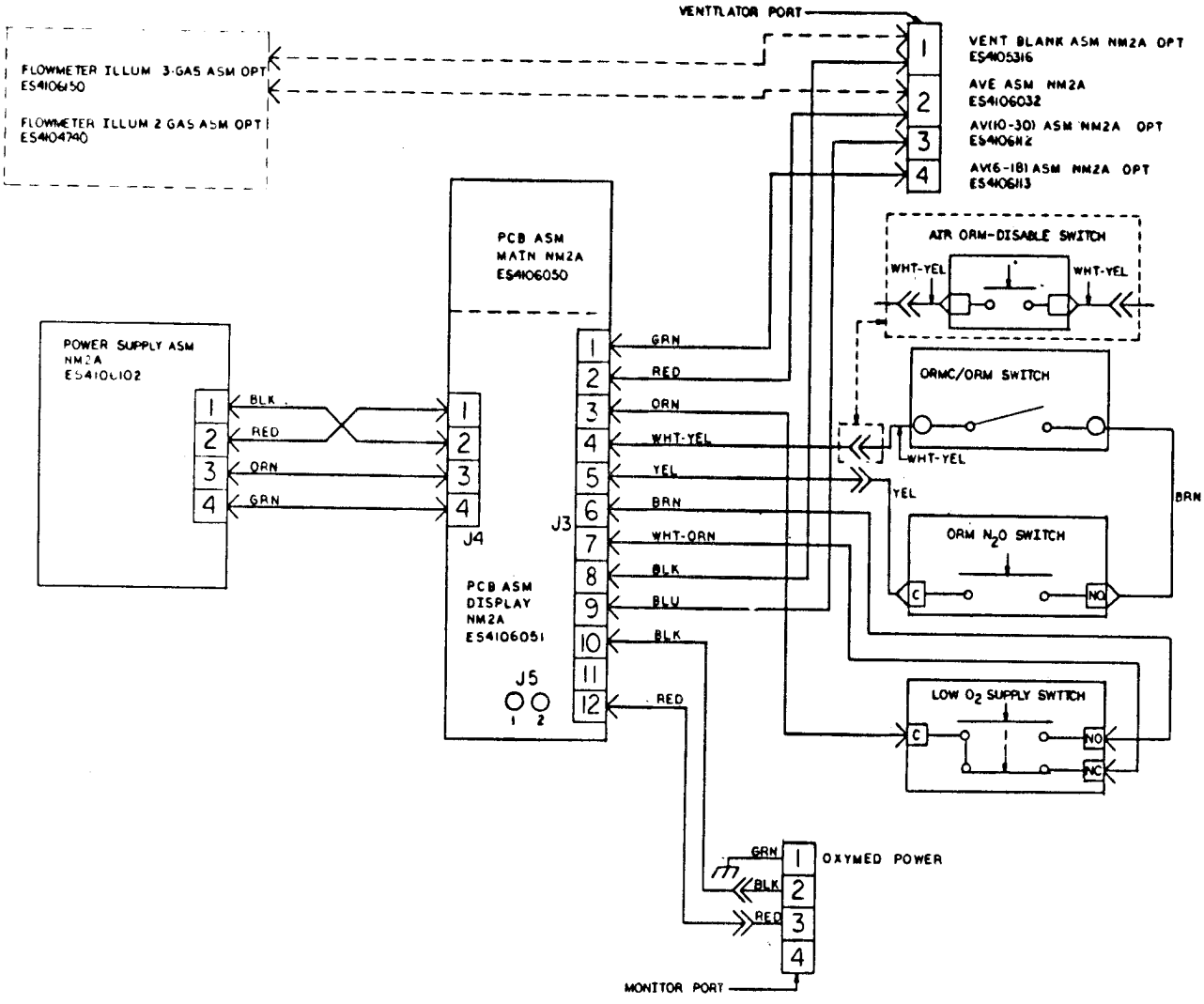

WIRE HARNESS
NARKOMED 2A

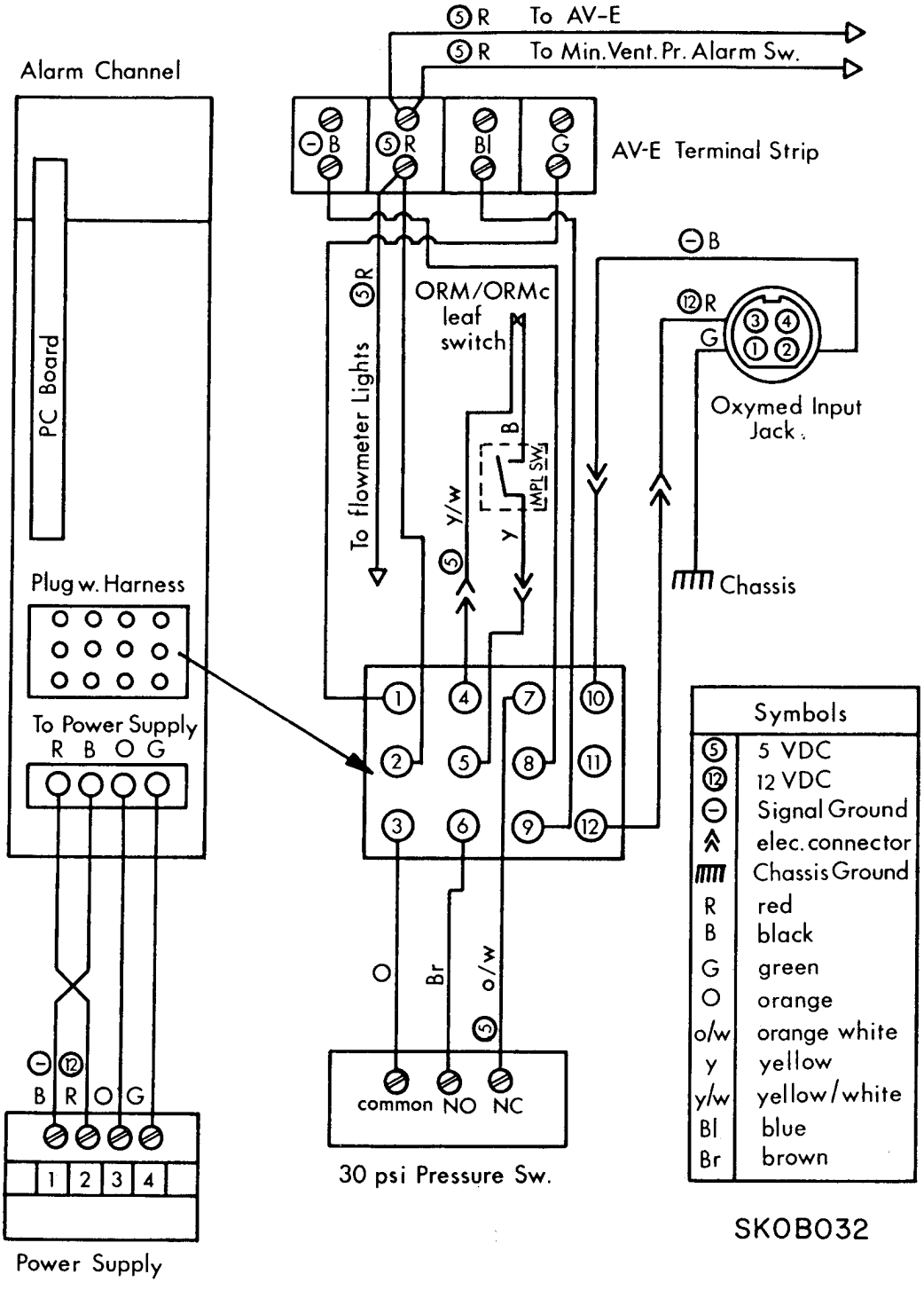

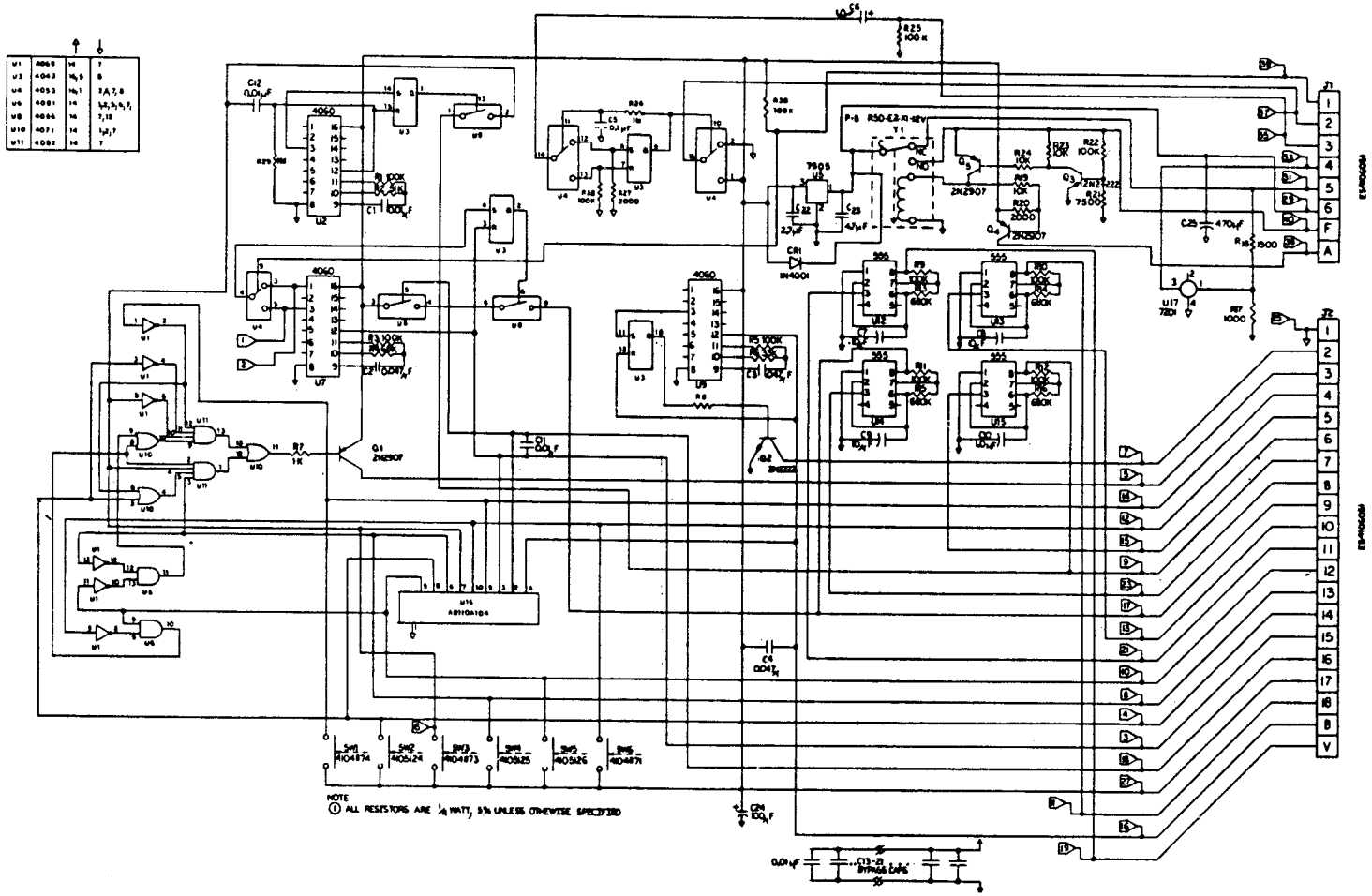

PCB ASSEMBLY
MAIN NARKOMED 2A

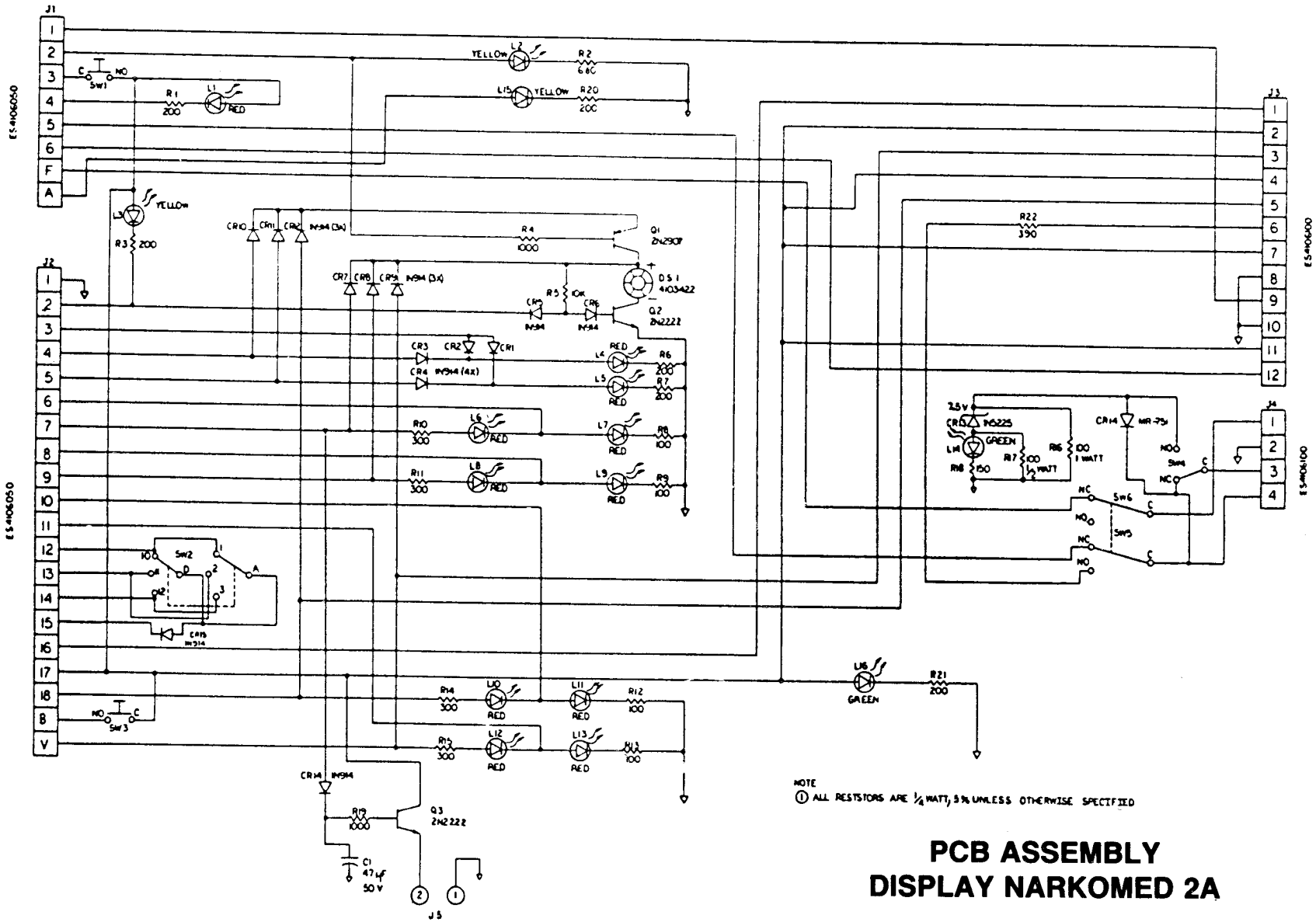

PCB ASSEMBLY
DISPLAY NARKOMED 2A

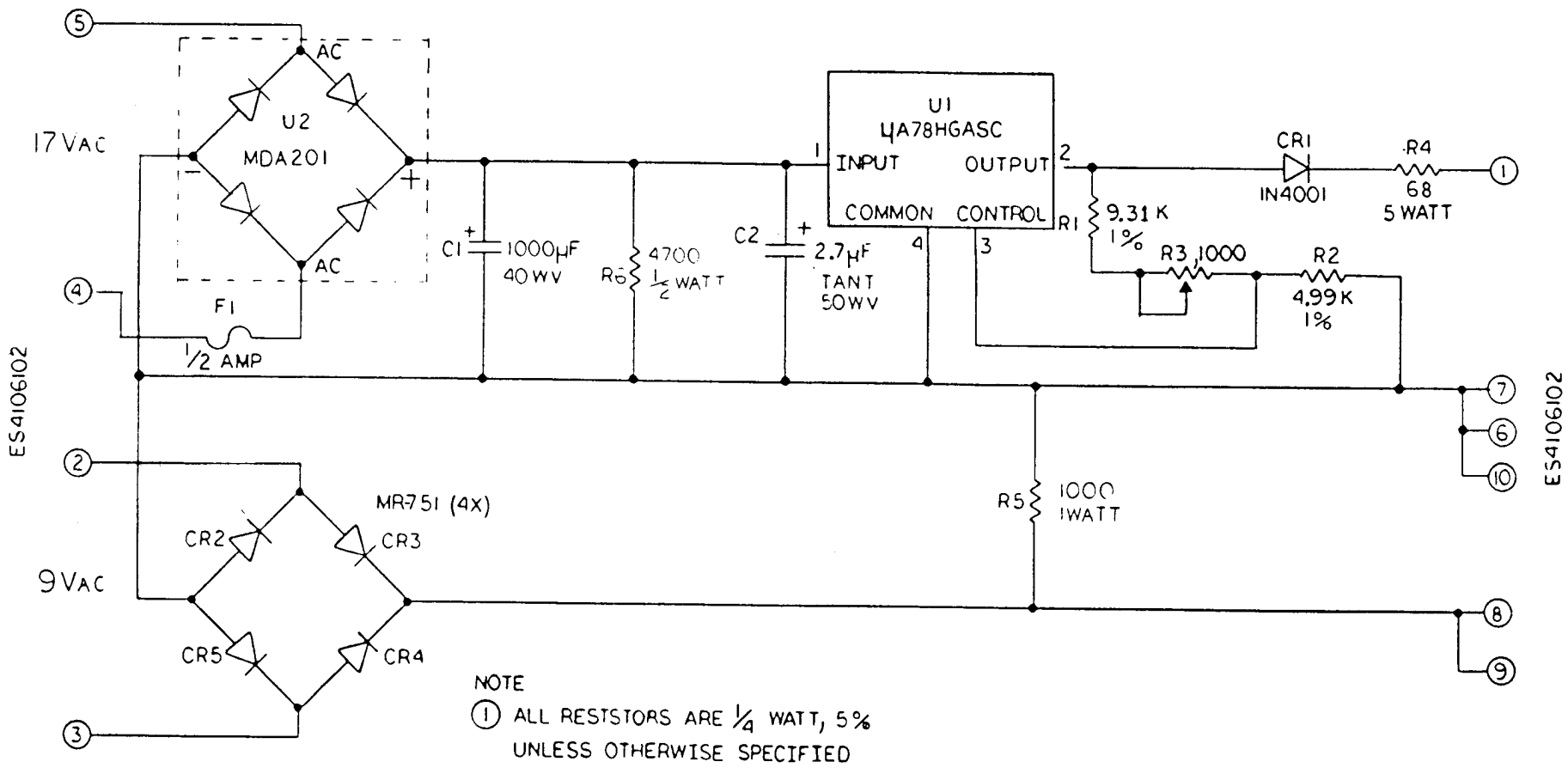

NOTE

(1) ALL RESTSTORS ARE 1/4 WATT, 5% UNLESS OTHERWISE SPECIFIED

PCB ASSEMBLY
POWER SUPPLY NARKOMED 2A

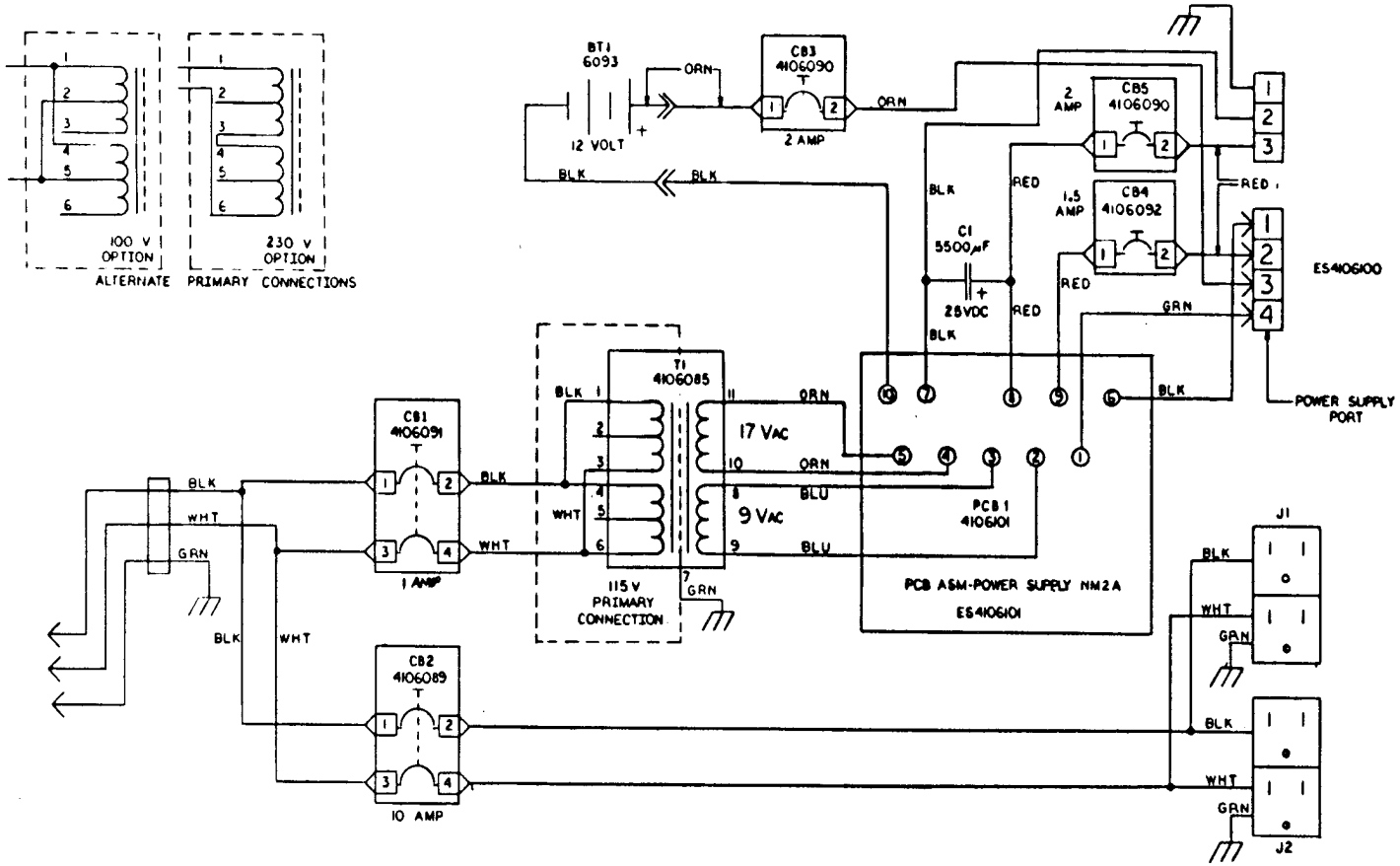

POWER SUPPLY ASSEMBLY
NARKOMED 2A

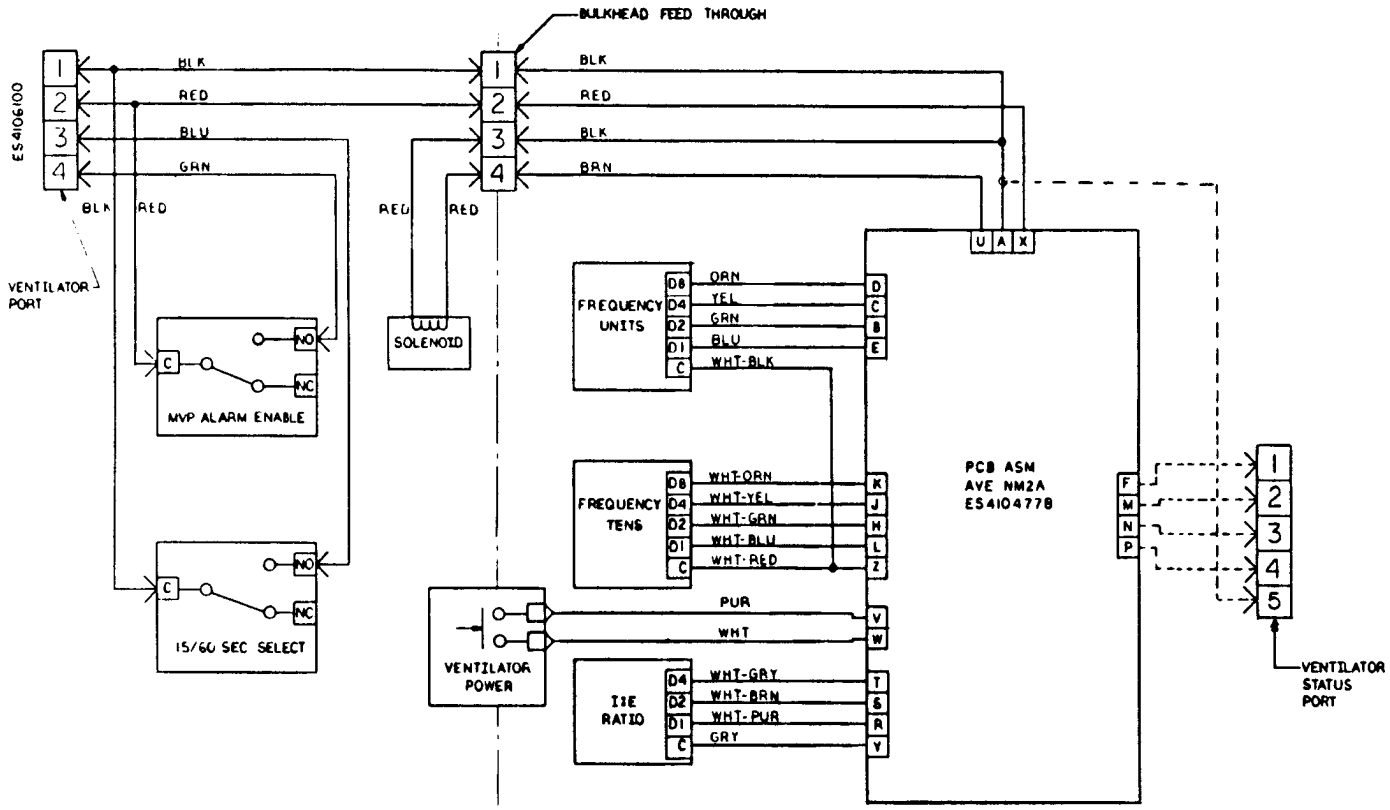

AVE ASSEMBLY
NARKOMED 2A

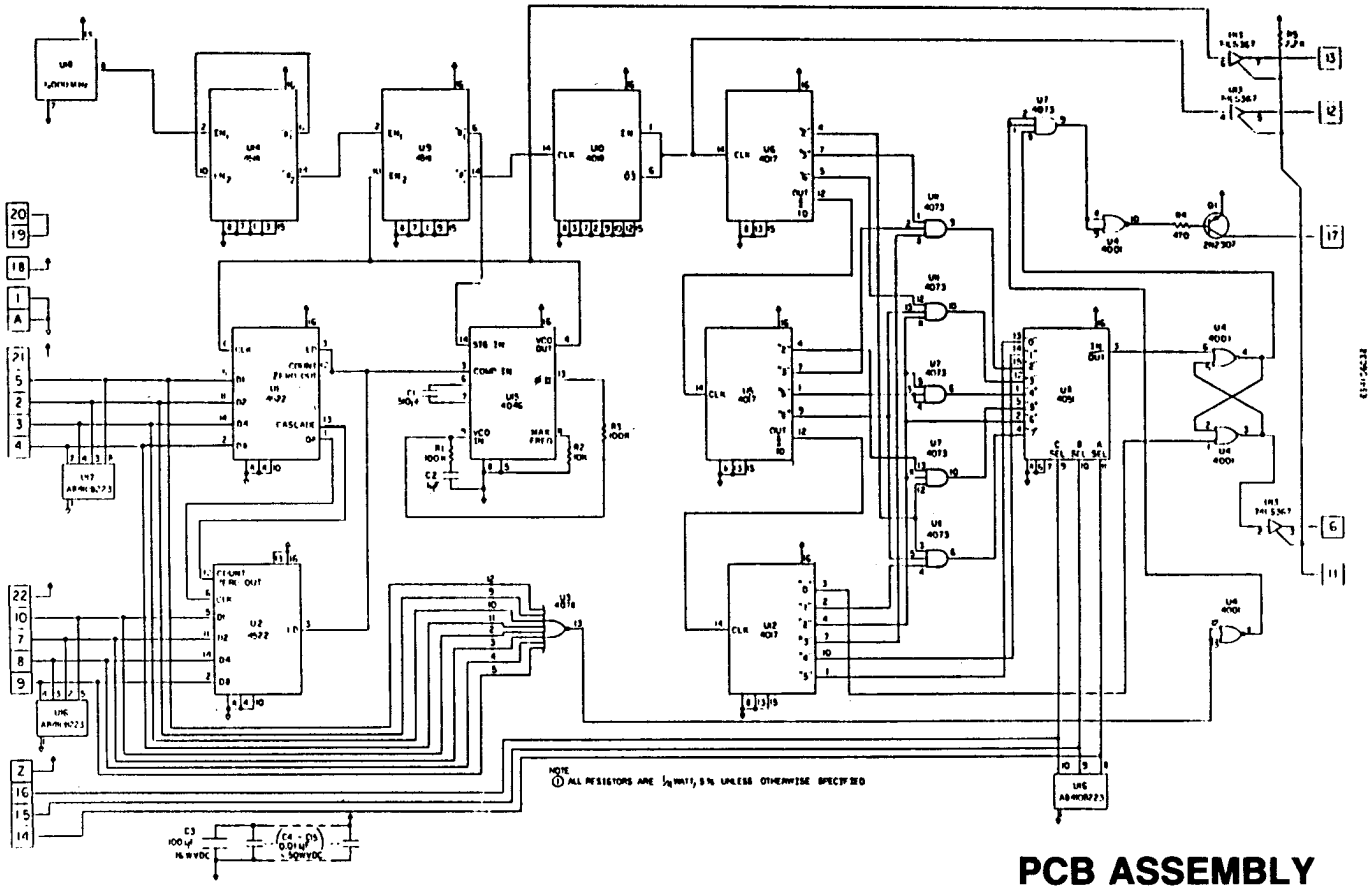

PCB ASSEMBLY
AVE NARKOMED 2A

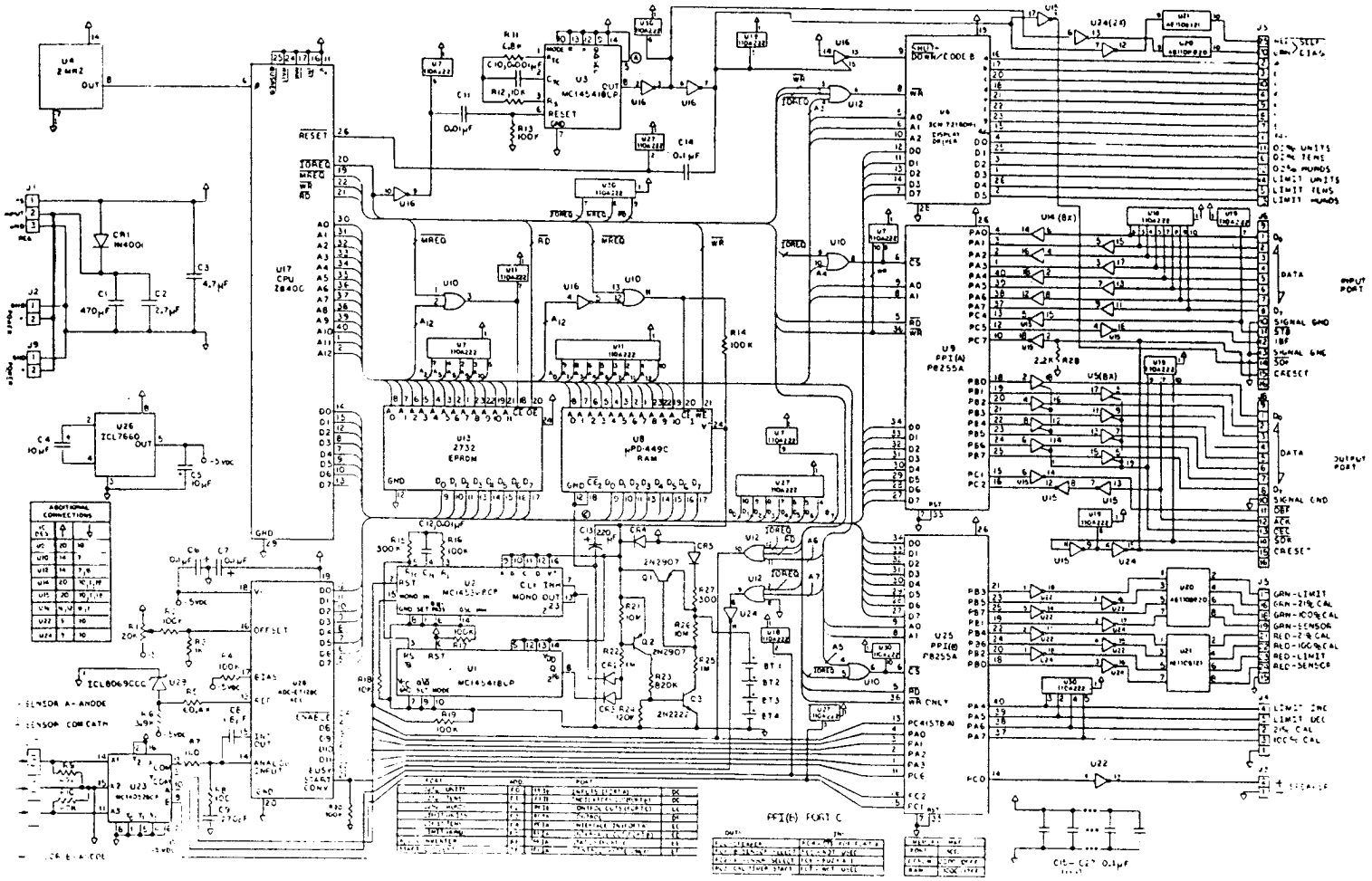

PCB ASSEMBLY
OXYMED MAIN

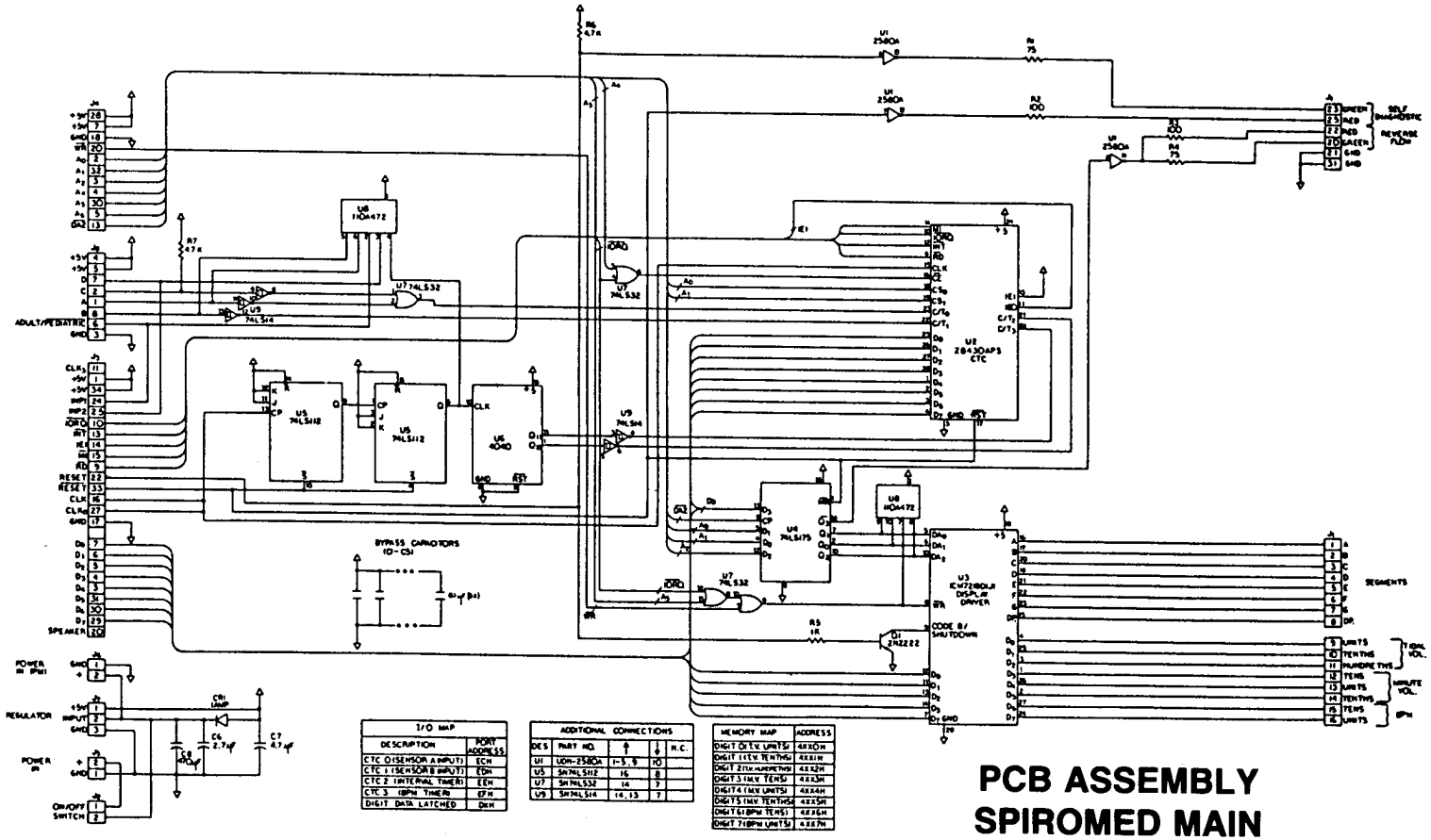

I/O MAP	
DESCRIPTION	PORT ADDRESS
CTC 0 (SENSOR A INPUT)	ECH
CTC 1 (SENSOR B INPUT)	EDH
CTC 2 (INTERVAL TIMER)	EEH
CTC 3 (BPM TIMER)	EFH
DIGIT DATA LATCHED	DXH

ADDITIONAL CONNECTIONS				
DES	PART NO.	↑	↓	N.C.
U1	UDN-2580A	1-5, 9	10	
U5	SN74LS112	16	8	
U7	SN74LS32	14	7	
U9	SN74LS14	14, 13	7	

MEMORY MAP	ADDRESS
DIGIT 0 (TEN UNITS)	4XX0H
DIGIT 1 (TEN TENTHS)	4XX1H
DIGIT 2 (TEN HUNDRETHS)	4XX2H
DIGIT 3 (MIN TENS)	4XX3H
DIGIT 4 (MIN UNITS)	4XX4H
DIGIT 5 (MIN TENTHS)	4XX5H
DIGIT 6 (BPM TENS)	4XX6H
DIGIT 7 (BPM UNITS)	4XX7H

PCB ASSEMBLY
SPIROMED MAIN

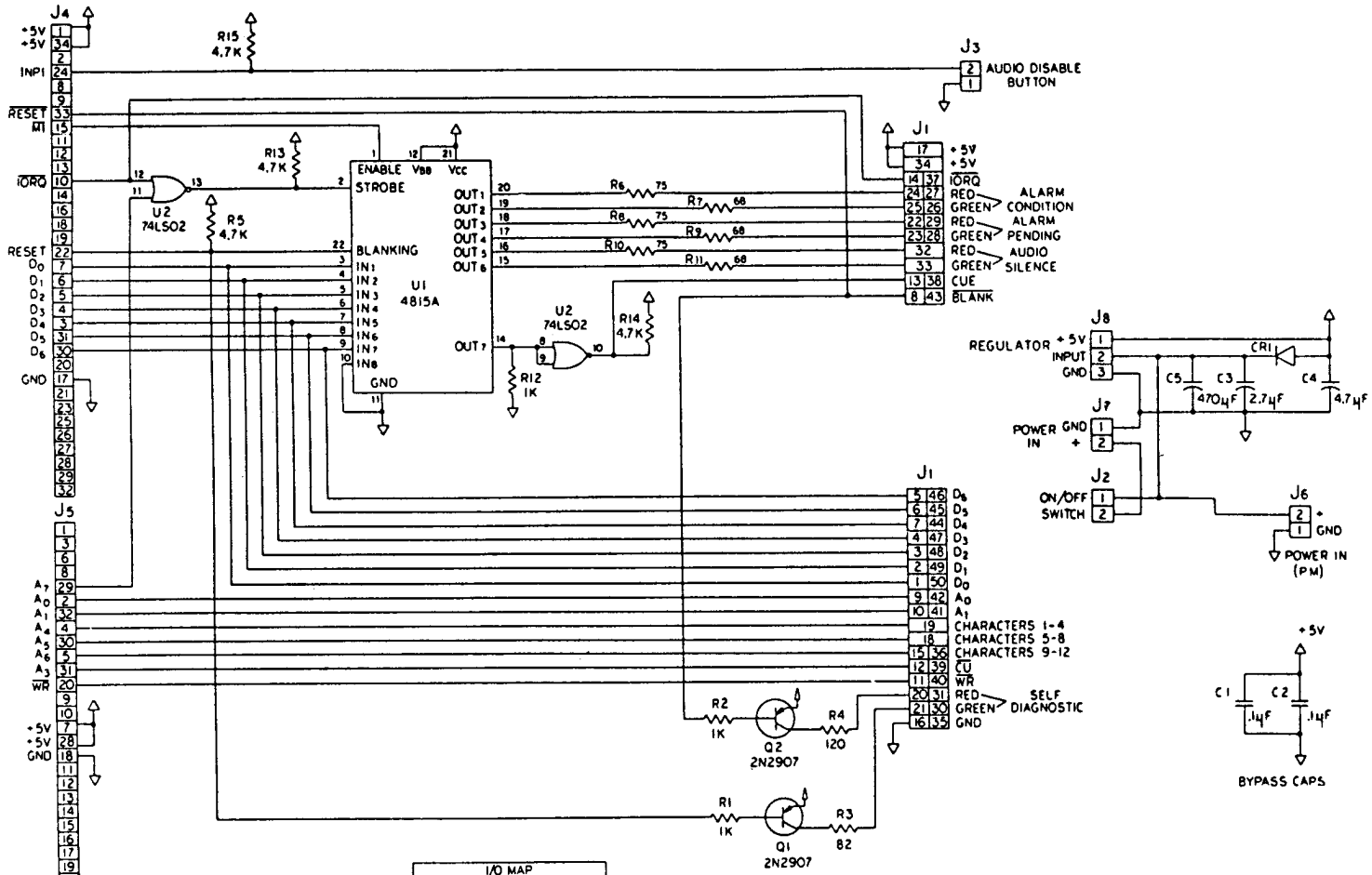

MEMORY MAP		
0000H-1FFFH PROGRAM	8000H-9FFFH	
2000H-3FFFH	A000H-BFFFH	
4000H-5FFFH	C000H-DFFFH	
6000H-7FFFH	E000H-E7FFH RAM	E800H-EFFFH
	F000H-F7FFH	F800H-FFFFH RESET

I/O MAP	
DESCRIPTION	PORT ADDRESS
STATUS CHAR 1-4	ECH
STATUS CHAR 5-8	DCH
STATUS CHAR 6-12	BCH
LEDS/CUE	7FH
CURSOR LOAD 1-4	E4H
CURSOR LOAD 5-8	D4H
CURSOR LOAD 9-12	B4H
AUDIO DISABLE	F4H

ADDITIONAL CONNECTIONS			
DESIGNATOR	↑	↓	N/C
U1			
U2	14,5,6,3,2	7	

PCB ASSEMBLY CENTRALERT MAIN

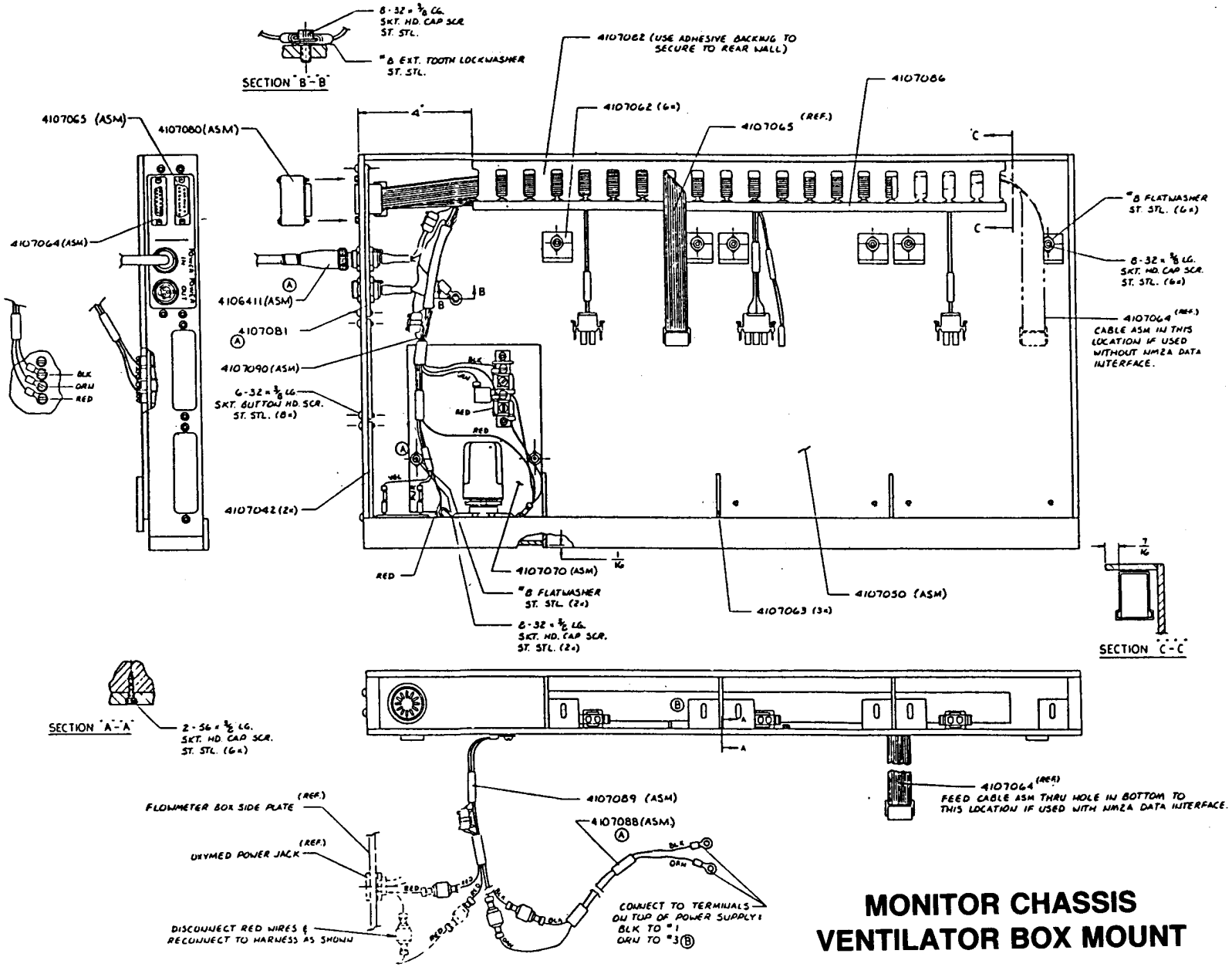

MONITOR CHASSIS VENTILATOR BOX MOUNT

MONITOR CHASSIS
VENTILATOR BOX MOUNT

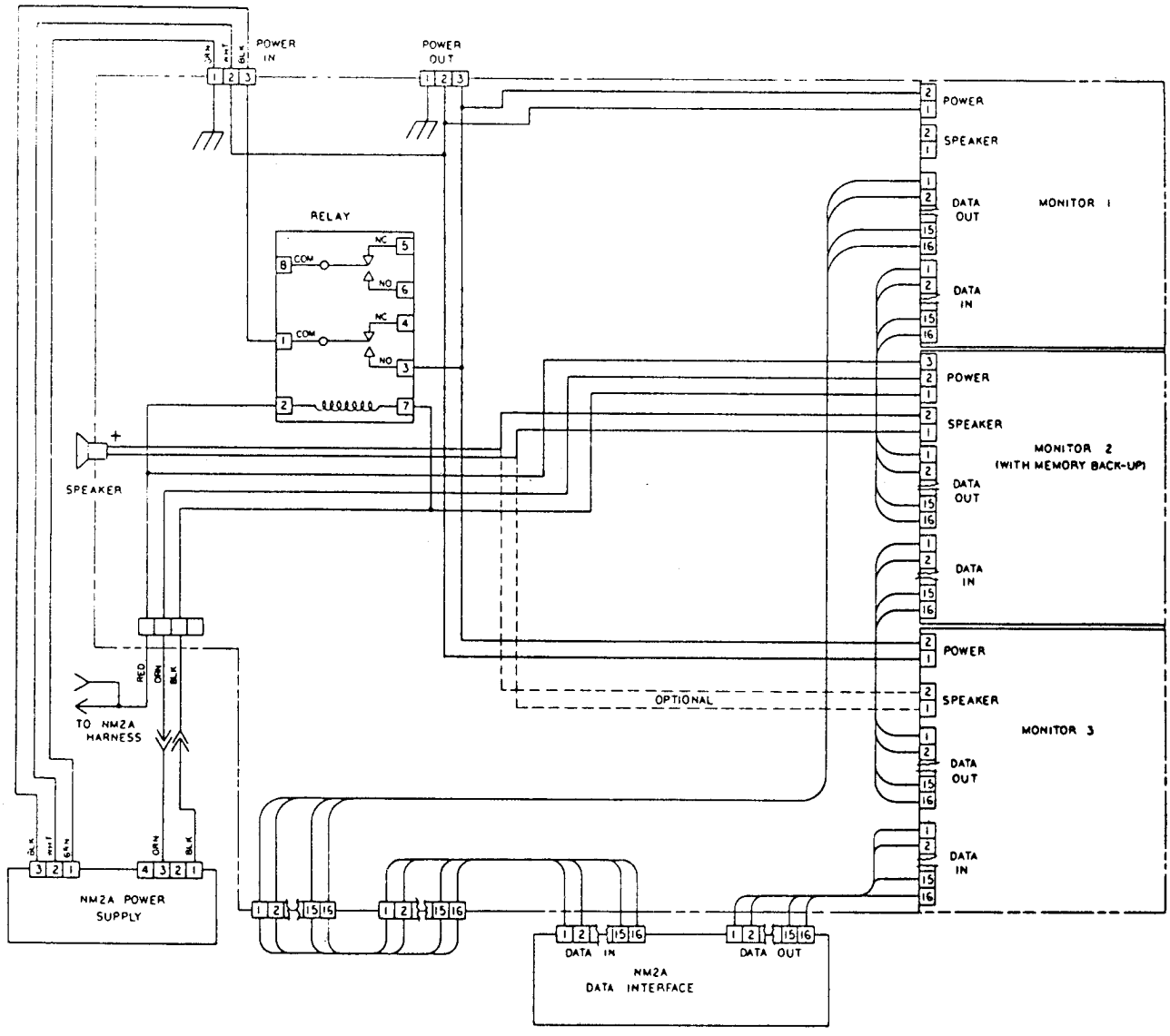

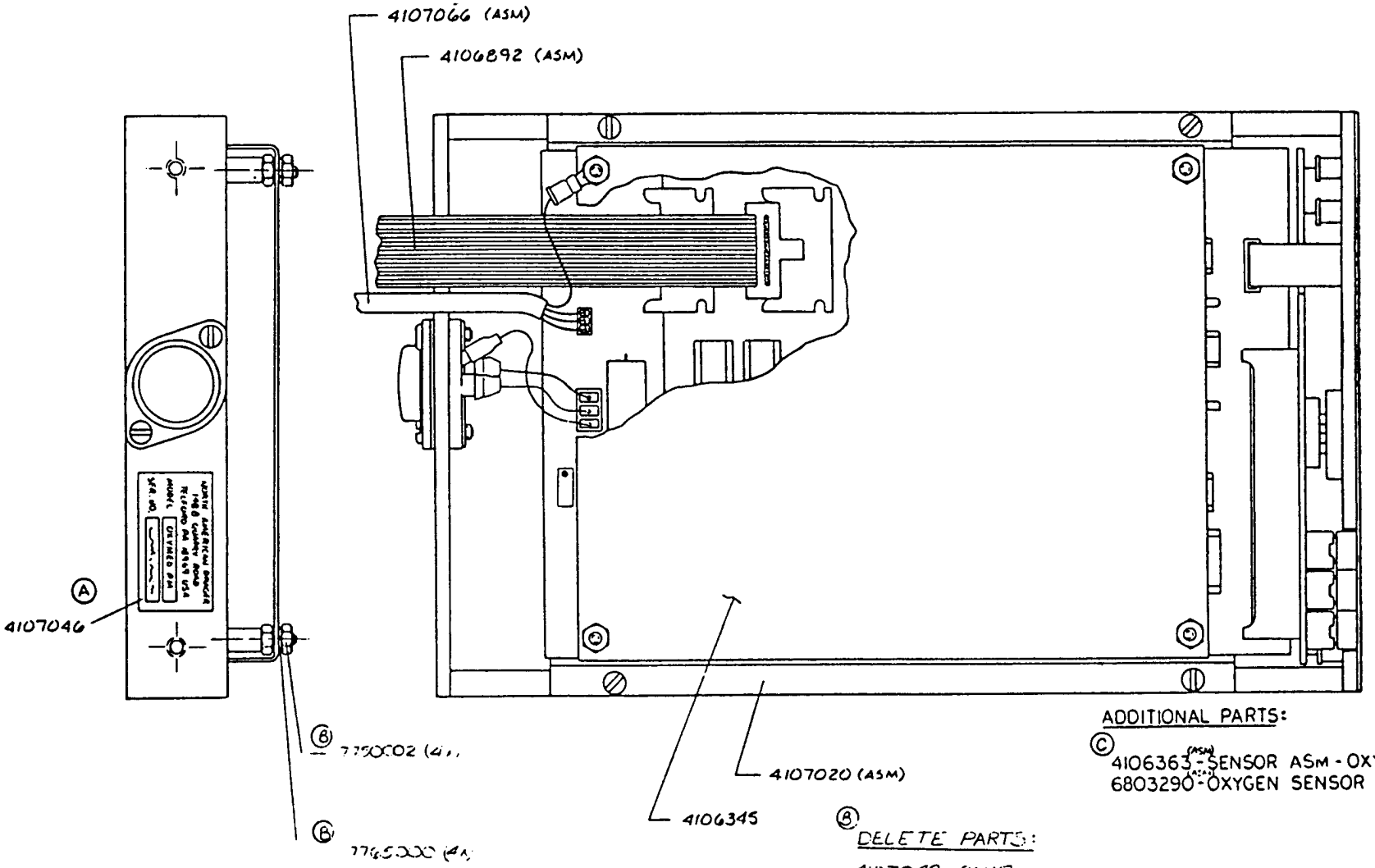

ADDITIONAL PARTS:

C
4106363 (ASM) - SENSOR ASM - OXYMED/OXYDIG
6803290 (MAT) - OXYGEN SENSOR CAPSULE

B
DELETE PARTS:

4107042 - PANEL - MONITOR INTERFACE - BLANK

OXYMED (PM)

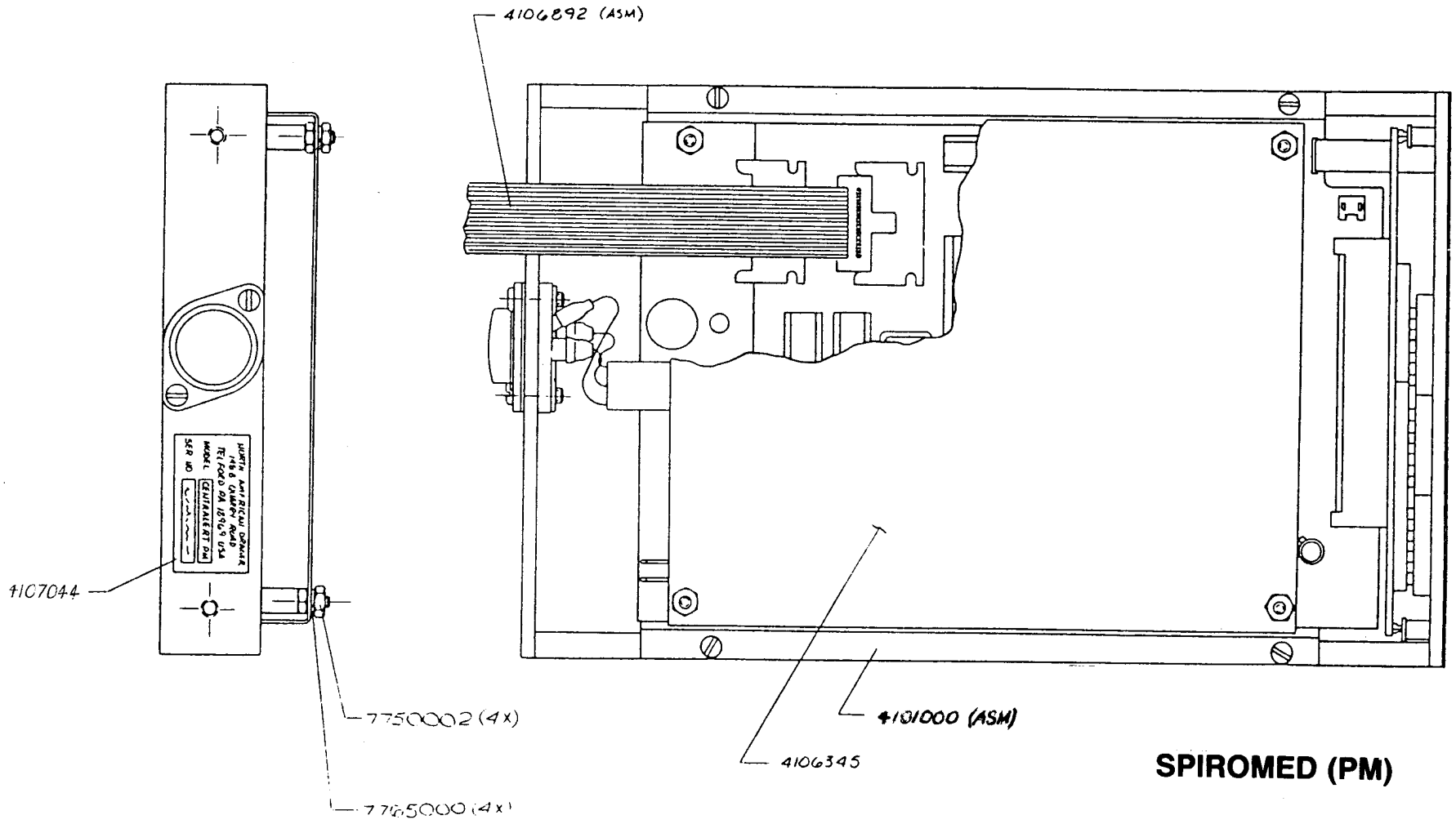

SPIROMED (PM)

ADDITIONAL PART:
4106362 SENSOR ASM - SPIROMED

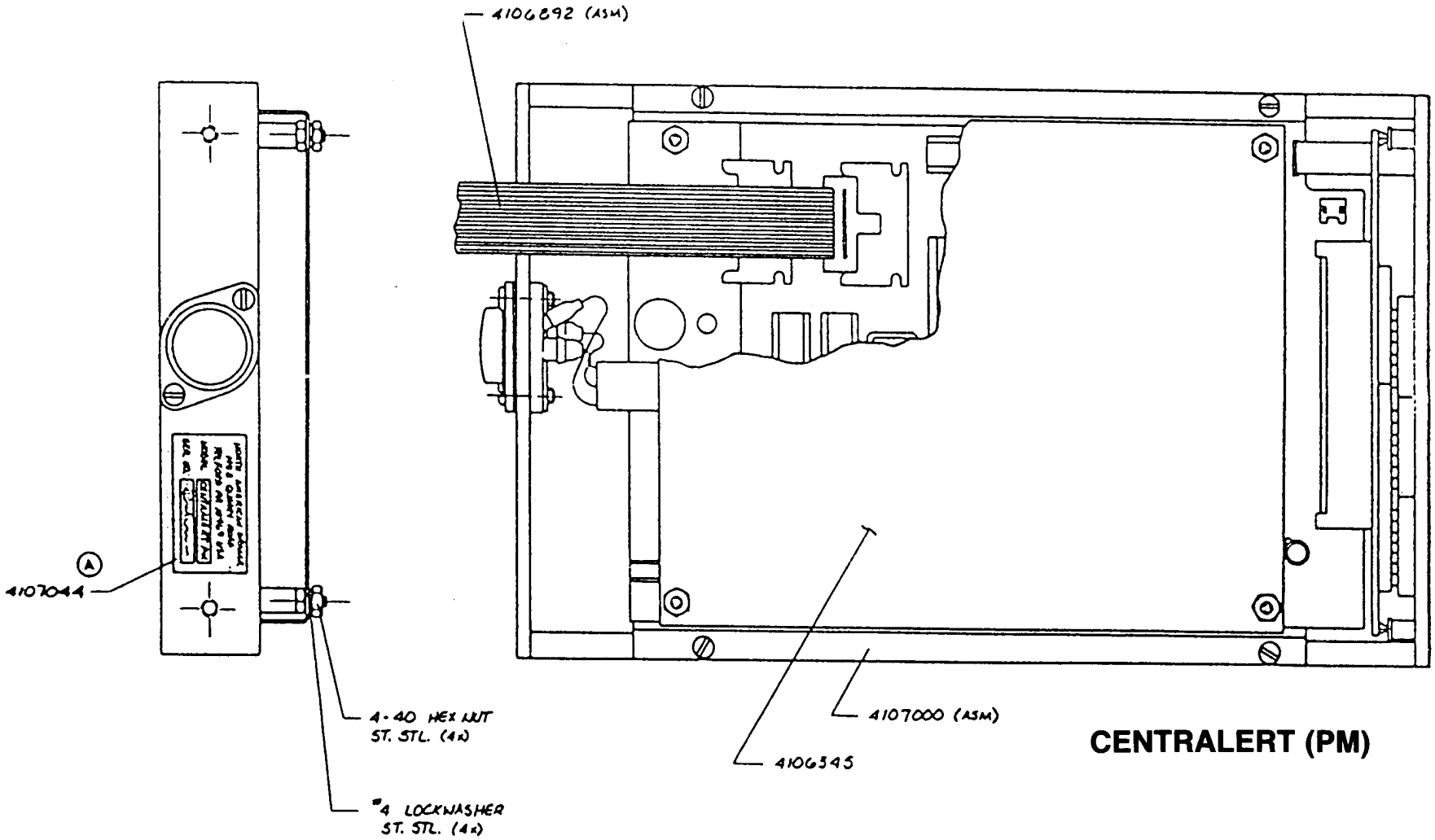

CENTRALERT (PM)

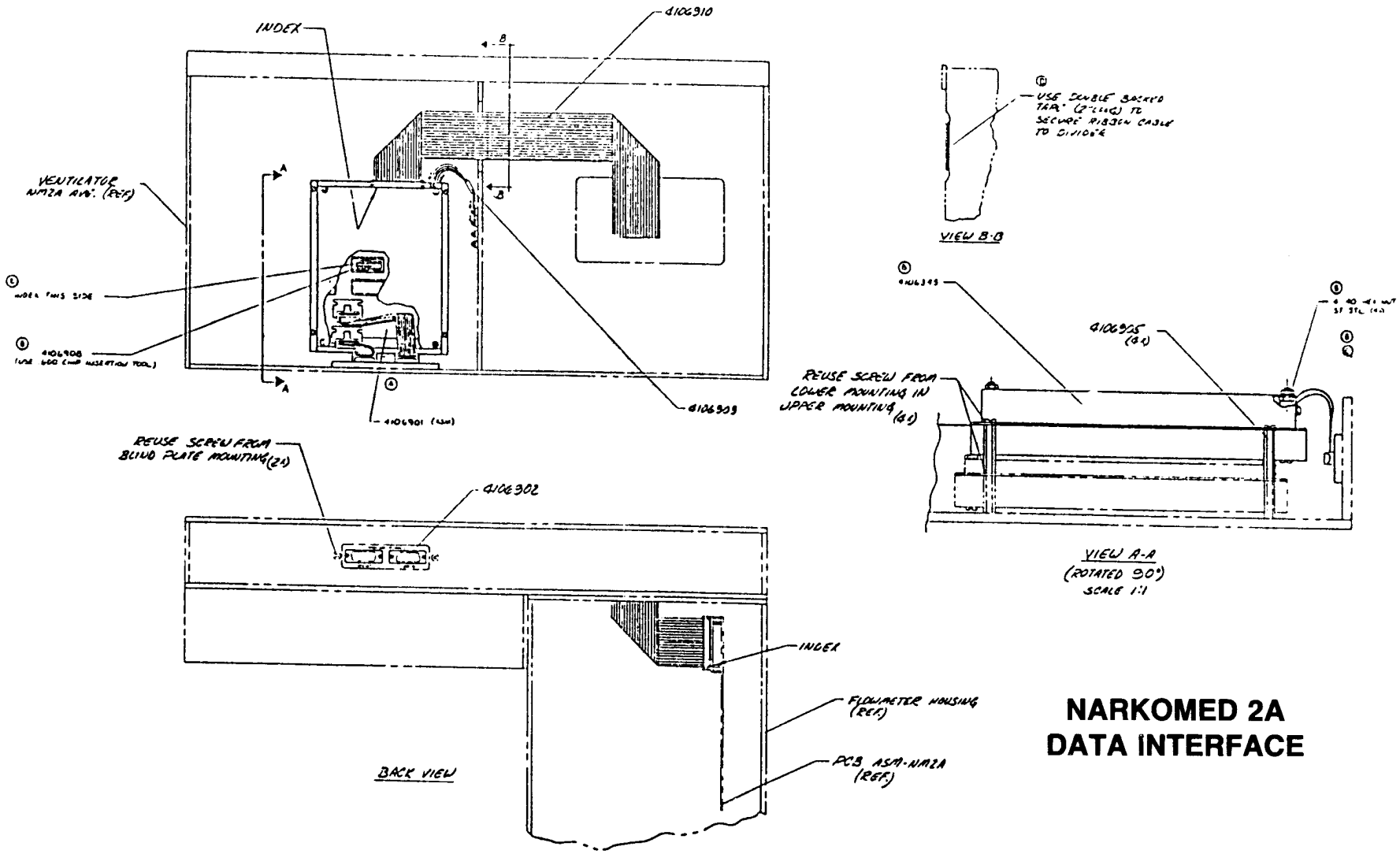

NARKOMED 2A DATA INTERFACE

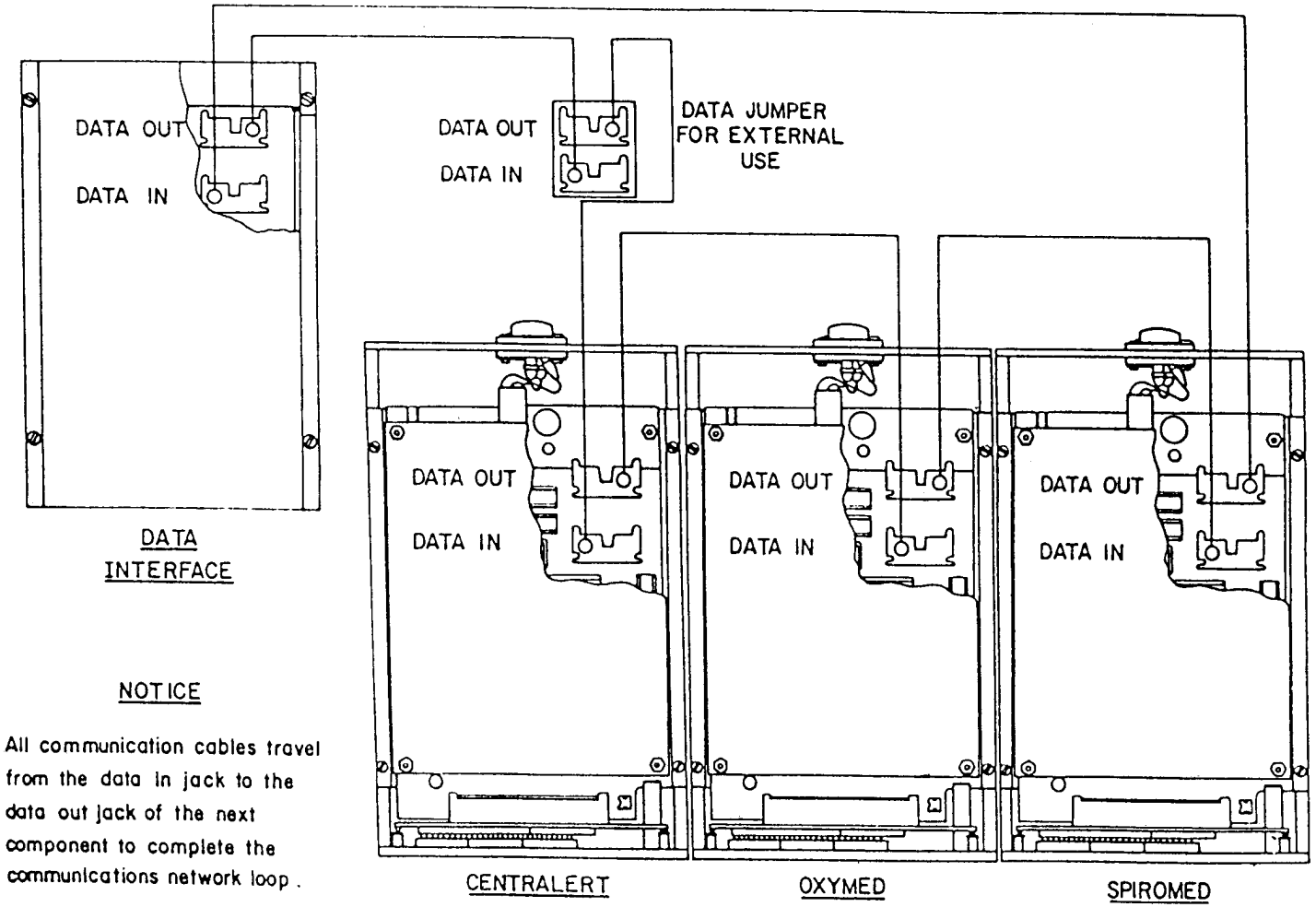

NOTICE

All communication cables travel from the data in jack to the data out jack of the next component to complete the communications network loop.

PANEL MOUNT COMMUNICATIONS NETWORK LOOP

SERVICE PROCEDURES

Service Procedures
Table of Contents

2.0.0.0. Service Procedures for Anesthesia Machines

2.1.0.0. Cleaning of Flowmeters - COMPACT

2.1.0.1. Tools Required

Allen wrenches (regular)
Regular small size screw driver
Pipe cleaner
Leak detector

2.1.0.2. Cleaning Procedure

2.1.0.3. Turn flow control valves OFF

2.1.0.4. Remove the 4 (four) screws which hold face plate of flowmeter assembly

2.1.0.5. With 5/32" allen wrench, carefully loosen allen screw above flowtube to be cleaned

2.1.0.6. Hold flowtube until it can easily be removed

2.1.0.7. Remove nylon stops from flowtube (a bent paper clip can be used for this)

2.1.0.8. Remove ball through top opening of flowtube

2.1.0.9. Clean flowtube with pipe cleaner and blow out flowtube

2.1.0.10. Apply leak detector to flow control valve outlet. Flow valve must not leak in closed position

2.1.0.11. Turn flow valve on and remove residual leak detector

2.1.0.12. Replace ball and nylon stops. Ball must have free movement from below minimum flow rate indication to above maximum flow rate indication

2.1.0.13. Replace flowtube and tighten allen screw hand tight

2.1.0.14. Replace face plate

2.1.0.15. NOTE:
Only remove one flowtube at one time

2.1.0.16. Check that flowtube is properly positioned and numbers can be read easily

2.1.0.17. After installation of flowtube, perform leak test

2.1.0.18. NOTE:
Flowtube with lower flow range always local[illegible] trol valve

2.1.1.0. Cleaning of Flowmeters - NARKOMED STANDARD

2.1.1.1. Tools Required

Allen wrenches (regular)
Regular small size screw driver
Pipe cleaner
Leak detector

2.1.1.2. Cleaning Procedure

2.1.1.3. Turn flow control valves OFF

2.1.1.4. Remove both screws of black face plate above flowmeter assembly

2.1.1.5. Remove both screws of clear plastic cover of the flowmeter which is to be cleaned

2.1.1.6. While holding flowtube with one hand insert small screw driver or allen wrench into hole of cam above flowtube

2.1.1.7. A counterclockwise turn (approximately 75 degrees) will release the flowtube

2.1.1.8. Remove nylon stops from flowtube (a bent paper clip can be used for this)

2.1.1.9. Remove ball through top opening of flowtube

2.1.1.10. Clean flowtube with pipe cleaner and blow out flowtube

2.1.1.11. Apply leak detector to flow control valve outlet. Flow valve must not leak in closed position

2.1.1.12. Turn flow valve on and remove residual leak detector

2.1.1.13. Replace ball and nylon stops. Ball must have free movement from below minimum flow rate indication to above maximum flow rate indication

2.1.1.14. Replace flowtube and tighten cam hand tight (approximately 75 degrees)

2.1.1.15. Replace clear plastic cover

2.1.1.16. Replace black face plate

2.1.1.17. NOTE:
Only remove one flowtube at one time

2.1.1.18. Flowtube with lower flow range is always located above the flow control valve

2.1.1.19. Check that flowtube is properly positioned and numbers can be read easily

2.1.1.20. After installation of flowtube, perform leak test

2.1.2.0. **Cleaning of Flowmeters - AM III, NARKOMED 2, and NARKOMED 2A**
(see parts list 4104053 A - Flowmeter Assembly)

2.1.2.1. **Tools Required**

Allen wrenches (regular and 5/32")
Regular small size screw driver
Pipe cleaner
Leak detector

2.1.2.2. **Cleaning Procedure**

2.1.2.3. Turn main switch and flow control valves OFF

2.1.2.4. Remove the 6 (six) allen screws of back panel behind flowmeter assembly

2.1.2.5. Remove 5/32" allen screws in upper left and right corners while holding the black face plate covering the top of the flowtube assembly. Remove face plate

2.1.2.6. Remove both screws of clear plastic cover

2.1.2.7. With 5/32" allen wrench carefully loosen allen screw above flowtube to be cleaned

2.1.2.8. Hold flowtube until it can easily be removed

2.1.2.9. Remove nylon stops from flowtube (a bent paper clip can be used for this)

2.1.2.10. Remove ball through top opening of flowtube

2.1.2.11. Clean flowtube with pipe cleaner and blow out flowtube

2.1.2.12. Turn main switch ON

2.1.2.13. Apply leak detector to flow control valve outlet. Flow valve must not leak in closed position (applies only to gases other than oxygen)

2.1.2.14. Remove residual leak detector

2.1.2.15. Replace ball and nylon stops. Ball must have free movement from below minimum flow rate indication to above maximum flow rate indication.

2.1.2.16. Replace flowtube and tighten allen screw hand tight

2.1.2.17. Replace clear plastic cover

2.1.2.18. Replace black face plate

2.1.2.19. Replace back cover

2.1.2.20. **NOTE:**
Only remove one flowtube at one time

2.1.2.21. Flowtube with lower flow range is always located above the flow control valve

2.1.2.22. Check that flowtube is properly positioned and numbers can be read easily

2.1.2.23. After installation of flowtube, perform leak test

2.3.0.0. Zero Adjustment of Flow Control Valve

(see parts list 4103409 A - Channel Assembly)

2.3.0.1. Tools Required

Allen wrench (1/16")
Adjustable wrench
Regular small size screw driver

2.3.0.2. Adjustment Procedure

2.3.0.3. Using a 1/16" allen wrench, loosen both set screws of flow control knob and remove

2.3.0.4. Check with adjustable wrench that chrome plated nut is hand tight

2.3.0.5. Check that flow control valve is turned OFF

2.3.0.6. Replace knob and make sure it turns freely on stem of flow control valve

2.3.0.7. Turn knob clockwise until it catches the pin of the chrome plated hexagon nut

2.3.0.8. Slowly back off knob as far as possible while maintaining a clockwise pressure against the pin. If knob should suddenly turn clockwise, repeat above procedure

2.3.0.9. When knob barely touches pin, tighten one set screw while applying constant clockwise pressure

2.3.0.10. Turn knob counterclockwise and check that maximum flow can be obtained

2.3.0.11. Turn knob clockwise and check that flow is completely turned off when knob is in 0 (zero) position (oxygen minimum flow cannot be turned off with flow control valve). Fasten second set screw

2.4.0.0. Repacking of Vaporizer Selector Valves - COMPACT and NARKOMED STANDARD

2.4.0.1. Tools Required

Allen wrenches (regular and 3mm)
Non-flammable solvent (isopropyl alcohol)
Stop cock lubricant (Dow Corning)
Leak detector

2.4.0.2. Repacking Procedure

2.4.0.3. Turn gas supply OFF

2.4.0.4. Drain right hand vaporizer and disconnect hoses from Vaporizer Selector Valve

2.4.0.5. Remove vaporizer without tilting and store in an upright position

2.4.0.6. NOTE:
The above procedures are not required for a COMPACT anesthesia machine

2.4.0.7. Remove allen screws and tension springs on rear valve

2.4.0.8. Move selector valve handle to the left (arrow pointing to the left)

2.4.0.9. With one hand apply pressure to center of valve handle assembly and chrome plated shaft on rear of valve. This will prevent the spring loaded valve to rapidly separate, when allen screw in valve handle assembly is removed

2.4.0.10. Slowly decrease pressure and valve handle assembly. The spring will force the handle away from the valve body

2.4.0.11. Remove spring from valve body and push shaft towards the rear of the valve block

2.4.0.12. Clean both parts of valve body and valve housing with solvent (isopropyl alcohol)

2.4.0.13. Dry all parts carefully

2.4.0.14. Lubricate all sealing surfaces of valve bodies and housing with stop cock grease

2.4.0.15. Remove all excess lubricant and reassemble valve, paying special attention to pin index

2.4.0.16. Replace tension spring. Make certain that valve has no play and locks snuggly in either vaporizer selection position

2.4.0.17. Replace vaporizer and connect vaporizer hoses

2.4.0.18. Turn gas supply ON

2.4.0.19. After complete installation of selector valve and vaporizer, perform leak test as per Preventive Maintenance Procedure

2.6.0.0. Cleaning and/or Exchange of Yoke Check Valve
(see parts list 1101640 A - Yoke Assembly with Check Valve)

2.6.0.1 Tools Required

Allen wrenches (regular and 1/4")
Two open end wrenches (11/16" for new style check valve)
Two open end wrenches (5/8" for old style check valve)
Open end wrench
Leak detector

2.6.0.2. Parts Required

Yoke check valve

2.6.0.3. Cleaning and/or Exchange Procedure

2.6.0.4 Turn oxygen and nitrous oxide gas supply OFF

2.6.0.5 Remove table top of anesthesia machine

2.6.0.6. NOTE:
It may be necessary to remove the drawers to allow for easier access to the yoke block assembly

2.6.0.7. Loosen fitting and remove copper tubing of the appropriate yoke assembly

2.6.0.8. Remove 1/4" allen screws which hold yoke assembly from inside frame

2.6.0.9. Remove yoke assembly

2.6.0.10 Loosen hexagon nut closest to the assembly (11/16" for new style and 5/8" for old style check valve)

2.6.0.11. Remove check valve assembly

2.6.0.12. Hold the valve body with a 11/16" open end wrench and turn brass hexagon nut counter-clockwise with a second open end wrench of same size

2.6.0.13. Open check valve assembly and remove stainless steel ball

2.6.0.14. Inspect seal and O-ring (if no visible damage is noticed cleaning of the check valve is usually sufficient to restore proper function)

2.6.0.15. If no damage is noticed, clean all parts which have orifices by blowing air or oxygen in both directions through each orifice

2.6.0.16. Reassemble check valve assembly

2.6.0.17. Install check valve assembly to yoke block assembly

2.6.0.18. Attach yoke valve assembly to frame and fasten 1/4" allen screws

2.6.0.19. Reconnect copper tubing and fasten fitting

2.6.0.20. Turn oxygen and nitrous oxide gas supply ON

2.6.0.21. Perform high pressure leak test

2.6.0.22. Reassemble table top

2.6.0.23. NOTE:
Only repair one check valve at one time

2.6.0.24. Check pin index safety system for correct gas

2.7.0.0. **Cleaning of Pipeline Check Valves**
(see parts list 4104053 A - Flowmeter Assembly NM2A, 2 Gas item 3, Check Valve Pipeline)

2.7.0.1. **Tools Required**

Allen wrenches (regular and 2mm for AM III and NM2)
Regular screw drivers
Open end wrenches (1/2" to 3/4")

2.7.0.2. **Cleaning Procedure**

2.7.0.3. Turn gas supply OFF and disconnect pipeline supply

2.7.0.4. Remove back cover of flowmeter compartment

2.7.0.5. **NOTE:**
The pipeline check valve is located immediately downstream from the oxygen DISS and the nitrous oxide DISS pipeline connector. The check valve is a 2" to 2.5" long brass body, which is composed of two hexagon brass blocks which contain the check valve mechanism (see sketch) Instead of the bushing, washer and stainless steel ball a specially machined brass body may be used. Do not reverse the position of this body during installation

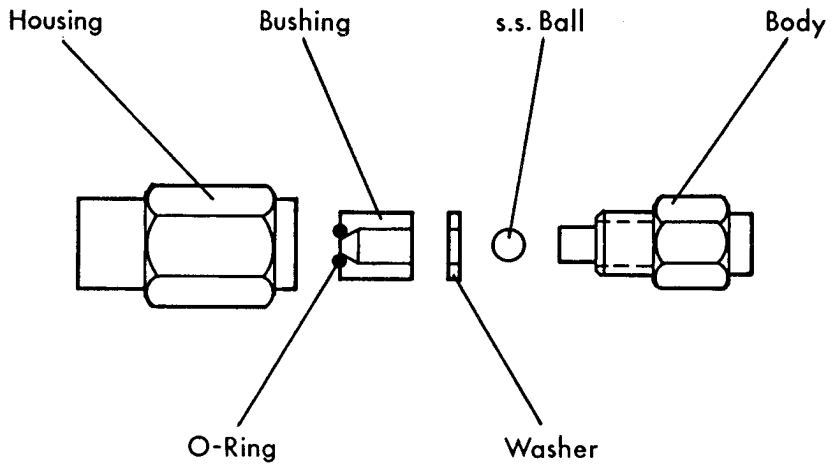

2.7.0.6. Depending on type of installation, various brass fittings and copper tubing may be attached to both ends of the valve body

2.7.0.7. Trace input and output lines to and from check valve

2.7.0.8. Loosen all 9/16" and 7/16" fitting nuts and remove all copper tubing to free valve assembly

2.7.0.9. **NOTE:**
Do not disconnect from check valve any fittings (tapered connectors, elbows, T-pieces) which have NPT threads. Loctite was applied to the threads of these connectors to prevent leaks

2.7.0.10. Remove the check valve including all brass fittings such as tapered connectors, elbows and T-pieces

Cleaning Procedure

2.7.0.11. **NOTE:**
On the AM III, NARKOMED 2 and NARKOMED 2A it may be necessary to loosen the chrome plated nut of the failsafe system

2.7.0.12. On the NARKOMED it is recommended to remove the block which contains the DISS pipeline connectors for oxygen and nitrous oxide. To remove the block, simply loosen the two allen screws in the right lower corner on the bottom of the flowmeter compartment

2.7.0.13. Without removing or changing the position of connectors, elbows or T-pieces, open the valve assembly by holding the housing with one wrench and turning the body counterclockwise with another wrench

2.7.0.14. Carefully open the assembly and remove brass nozzle with seat

2.7.0.15. Blow oxygen or air through the orifices of the housing, bushing and body

2.7.0.16. Reassemble pipeline check valve in proper order

2.7.0.17. Tighten body to housing by using two wrenches

2.7.0.18. Install valve assembly and connect all copper tubings

2.7.0.19. Fasten all tube fittings

2.7.0.20. Turn cylinder gas supply ON

2.7.0.21. Check all connections which were opened with leak detector

2.7.0.22. Check all DISS pipeline connectors for leaks with leak detector

2.7.0.23. Perform high pressure and low pressure leak test

2.7.0.24. Replace back cover of flowmeter compartment

3.0.0.0. Service and Conversion Procedures for Anesthesia Accessories

3.1.0.0. **Disassembly and Assembly of Frozen Manual/Automatic Selector Valve**
(see parts list 4102698 A - Manual/Automatic Selector Valve)

3.1.0.1. **Tools Required**

Allen wrench (9/64")
Stop cock lubricant (Dow Corning)

3.1.0.2. **Disassembly and Assembly Procedure**

3.1.0.3. Detach valve from support arm by removing the 3 (three) mounting screws

3.1.0.4. Place valve with selector lever facing down on a flat, solid surface

3.1.0.5. A rod (nylon, wood, plastic or screw driver handle) with not more than 5/8" diameter, is inserted in the valve opening

3.1.0.6. Carefully but firmly tap rod (tip of screw driver) to loosen valve cone. Repeat until selector lever moves freely

3.1.0.7. Remove the 4 (four) corner screws of the valve block which holds the valve lever (9/64" allen wrench)

3.1.0.8. **NOTE:**
Under no circumstances remove or adjust the 2 (two) allen screws which are located to the right and left of the rotating center body of the valve lever

3.1.0.9. After detaching the block containing the valve lever, the plastic valve cone can be removed from the valve housing

3.1.0.10. Clean cone and housing thoroughly of all silicon grease

3.1.0.11. Lubricate cone with stop cock grease

3.1.0.12. Reassemble valve, paying special attention to proper location of spring. Make certain that index pins of lever assembly match corresponding holes in valve cone

3.1.0.13. Mount manual/automatic selector valve to absorber

3.1.0.14. Perform appropriate leak test

3.2.0.0. **Cleaning of Scavenger Interface**
(see parts list 4102088 A - Scavenger Interface for Hospital Vacuum System)

3.2.0.1. **Tools Required**

Needle nose pliers

3.2.0.2. **Cleaning Procedure**

3.2.0.3. **NOTE:**
The negative and positive pressure relief valves require periodic cleaning. Lint and dust may accumulate in the valves or valve caps

3.2.0.4. Remove cap from negative pressure relief valves by turning counterclockwise

3.2.0.5. **NOTE:**
Carefully remove valve disc with needle nose pliers by turning counterclockwise

3.2.0.6. Do not puncture disc or bend spring with tips of needle nose pliers

3.2.0.7. Using a small soft brush carefully remove lint and dust from valve disc assembly

3.2.0.8. Blow residual dust and lint from disc and spring with low flow of air
(not to exceed 5 l/min at 50 psi)

3.2.0.9. Be careful not to change spring tension while cleaning disc assembly

3.2.0.10. Install valve disc assembly in scavenger interface housing by turning clockwise

3.2.0.11. Install cap

3.2.0.12. Repeat procedure for positive pressure relief valve (Repeat procedure for negative pressure relief valve if applicable)

3.2.0.13. Test scavenger interface for proper function

3.3.0.0. **Adjustment of O.R.M. Diaphragm Arrangement**
(see parts list 4106170 A - O.R.M. Assembly NM2A)

3.3.0.1. **Tools Required**

Allen wrenches (3/32" and 9/64")
Needle nose pliers
Open end wrench (11/32")

3.3.0.2. **Adjustment Procedure**

3.3.0.3. Read NAD instructions for O.R.M. operation before attempting adjustment

3.3.0.4. Turn main switch on

3.3.0.5. Check operation of O.R.M. by setting the oxygen flow to one of the following values. Gradually increase nitrous oxide flow to the corresponding value. When nitrous oxide flow reaches the indicated value the alarm should sound. The alarm should turn off when nitrous oxide flow is decreased or oxygen flow is increased

3.3.0.6.

O_2 (l/min)	N_2O (l/min)	N_2O variance (l/min)	% O_2
1.0	2.3	1.9-2.8	26-34
1.5	3.5	2.9-4.2	26-34
2.0	4.7	3.9-5.7	26-34
3.0	7.0	5.8-8.5	26-34

3.3.0.7. Other oxygen concentration values can be calculated by applying the following formula:

$$\frac{O_2 \text{ (l/min)}}{O_2 + N_2O \text{ (l/min)}} = O_2 \text{ \% Concentration}$$

3.3.0.8. Although ± 13.5% variations are acceptable (26% to 34% oxygen concentration of total flow) the following adjustment can be made (see sketch)

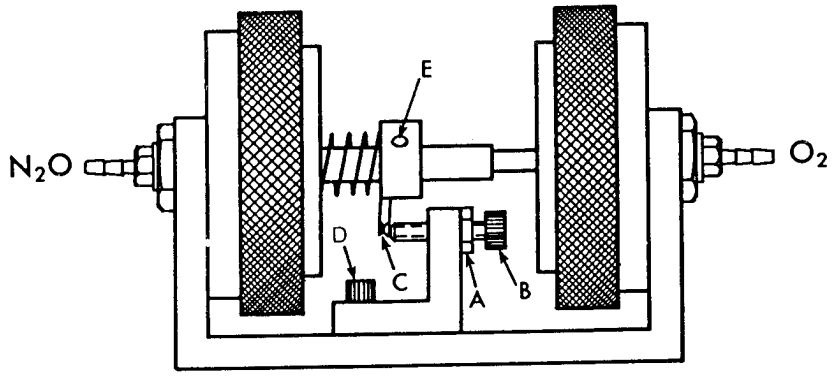

Adjustment Procedure

3.3.0.9. Set oxygen flow to 3.0 l/min

3.3.0.10. Increase nitrous oxide flow to 7.0 l/min

3.3.0.11. Contact C should close when N_2O reaches 7 l/min

3.3.0.12. If alarm is not activated or is activated before N_2O reaches 7.0 l/min, hold set screw B with needle nose pliers and turn lock nut A counterclockwise

3.3.0.13. Set O_2 at 3.0 l/min and N_2O at 7.0 l/min

3.3.0.14. Turn set screw in either direction until contacts C just close

3.3.0.15. Repeat this procedure at several different O_2/N_2O settings (see 3.3.0.6. and 3.3.0.7.)

3.3.0.16. If screw B cannot be turned far enough to one side, loosen allen screw D and move angle bracket in desired direction

3.3.0.17. When adjustment is completed, carefully fasten lock nut A while holding set screw B in position with needle nose pliers

3.3.0.18. NOTE:

Older O.R.M. units are not equipped with set screw B. It may be necessary to move brass disc E when performing above procedure

Newer O.R.M. units are equipped with the same adjustment device as an O.R.M.c. - see procedure 3.11.0.0. for adjustment

3.7.1.0. **Adjustment of 3-Vaporizer Exclusion System**
(see parts list 4104927 A - 3-Vaporizer Exclusion System)

3.7.1.1. **Tools Required**

Allen wrenches

3.7.1.2. **Adjustment Procedure**

3.7.1.3. Turn left and right vaporizers OFF

3.7.1.4. Turn center vaporizer ON

3.7.1.5. Tighten 6-32 set screws for center pin adjustment. Set screws need only be tightened enough for left and right vaporizers to be locked (set screws are located in the short pivot arms, item 2)

3.7.1.6. Turn center vaporizer OFF

3.7.1.7. Turn left vaporizer ON

3.7.1.8. Tighten set screw on swivel arm behind left vaporizer (located in long pivot arm, item 3)

3.7.1.9. Turn left vaporizer OFF and turn right vaporizer ON

3.7.1.10. Tighten set screw on swivel arm behind right vaporizer (located in long pivot arm, item 3)

3.7.1.11. **NOTE:**
Do not tighten set screws too much. Each vaporizer handwheel must turn easily while the other two vaporizers must remain locked

3.7.1.12. When all vaporizers operate properly, tighten lock nuts on set screws behind left and right vaporizers

3 VAPOR EXCLUSION SYSTEM

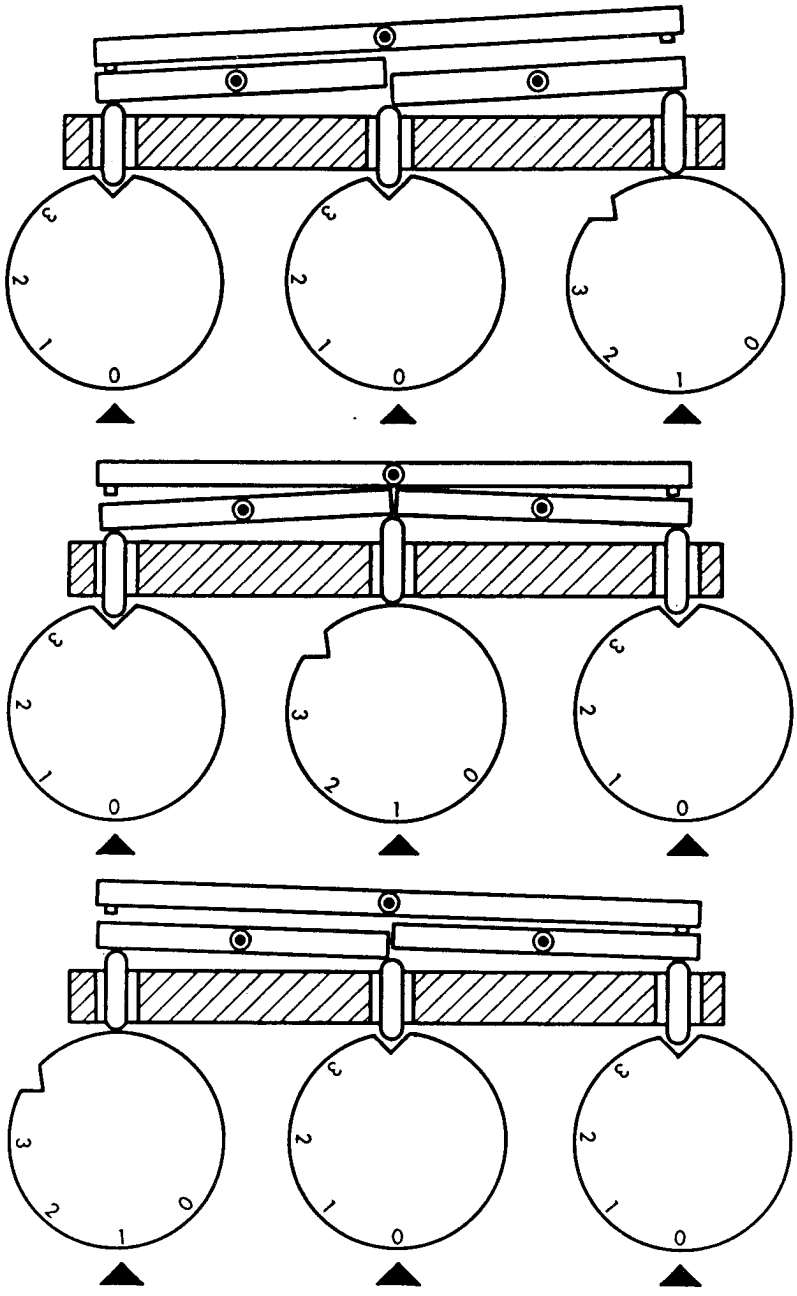

3.11.0.0. **Adjustment of O.R.M.c. in NARKOMED 2 and NARKOMED 2A**
(see parts list 4104000 A - O.R.M.c.)

3.11.0.1. **Tools Required**

Allen wrenches (5/64" and 3/32")

3.11.0.2. **Adjustment Procedure**

3.11.0.3. Remove O.R.M./O.R.M.c. coverplate

3.11.0.4. Connect oxygen and nitrous oxide cylinders to yokes and turn both cylinders ON

3.11.0.5. Turn oxygen flow control OFF

3.11.0.6. Turn nitrous oxide flow control to maximum

3.11.0.7. **NOTE:**
Set the air/nitrous oxide selector switch to nitrous oxide on machines equipped with air gas circuits

3.11.0.8. Turn main switch ON

3.11.0.9. Loosen set screw A and rotate mount B with leaf switch C upwards. Fasten set screw A to prevent mount B from moving

3.11.0.10. Set oxygen flow between 450 and 500cc per minute

3.11.0.11. Loosen set screw E and move cam F on shaft G toward spring P. When nitrous oxide begins to flow, fasten set screw E to secure cam F to shaft G

3.11.0.12. **NOTE:**
Nitrous oxide flow must be activated when oxygen flow is set between 300 and 500cc per minute

3.11.0.13. Loosen set screw H and then turn set screw J that the shortest distance between set screw J and the periphery of eccentric wheel K is directed towards the position of leaf switch C

3.11.0.14. Loosen set screw A and move mount B so that insulator M is as close as possible to eccentric wheel K. Fasten set screw A

3.11.0.15. While the nitrous oxide flow control is turned to maximum, adjust the oxygen flow to various settings between 1 and 4 l/min. The nitrous oxide flow should change so that the oxygen concentration is never less than 25% O_2. (Check the oxygen monitor) to determine the oxygen/nitrous oxide flow relationship without the use of an oxygen monitor, apply the following table:

3.11.0.16.

O_2 (l/min)	N_2O (l/min)	N_2O variance (l/min)	% O_2
1.0	2.6	2.2-3.0	25-31
1.5	3.9	3.3-4.5	25-31
2.0	5.1	4.4-6.0	25-31
3.0	7.7	6.7-9.0	25-31
4.0	10.3	8.9-12.0	25-31

Adjustment Procedure

NOTE:

3.11.0.17. Using the above table set the oxygen flow to 3.0 l/min. The nitrous oxide flow should be between 6.7 and 9.0 l/min

3.11.0.18. Adjust eccentric wheel K by turning set screw J until the contacts of leaf switch C touch and the audio/visual O.R.M.c. alarm is obtained

3.11.0.19. Repeat the above procedure by setting different N_2O/O_2 liter flows as shown in table 3.11.0.16.

3.11.0.20. Turn nitrous oxide flow to 10 l/min and reduce oxygen flow until nitrous oxide flow drops to 0 l/min. The O.R.M.c. alarm must stay activated during the entire procedure

3.11.0.21. Turn the nitrous oxide flow control valve to maximum and the oxygen flow OFF. The minimum oxygen flow should be between 250 and 300cc. Slowly turn the oxygen flow control valve ON. The nitrous oxide flow should be activated between 300 and 500cc of oxygen flow

3.11.0.22. Fasten set screw H so that block I locks eccentric wheel K into position

3.11.0.23. Depressurize anesthesia machine and disconnect nitrous oxide and oxygen supply

3.11.0.24. CAUTION:
In the OFF position contact N of leaf switch C must not touch the aluminum body 0 of the O.R.M.c. If contact N touches body 0, a 5 VDC current may be applied to the chassis of the anesthesia machine and consequently may cause a short circuit

3.11.0.25. Check that set screw A, F and H are secured and replace back panel

3.11.0.26. Trouble Shooting Guide

3.11.0.26.1. No alarm
- Check leaf switch adjustment
- Check for disconnect or leaks in 1/8" PVC tubing #33 of the nitrous oxide circuit

3.11.0.26.2. Constant alarm when nitrous oxide flow is turned on
- Check leaf switch adjustment
- Check for disconnect or leaks in 1/8" PVC tubing #27 of the oxygen circuit

ADJUSTMENT OF ORMc

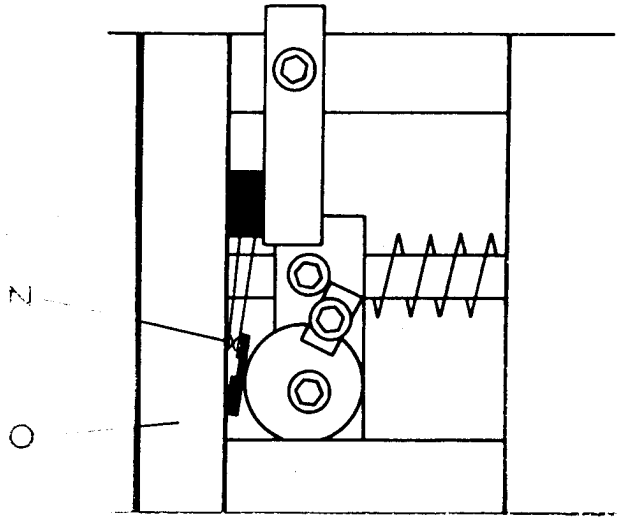

Figure I

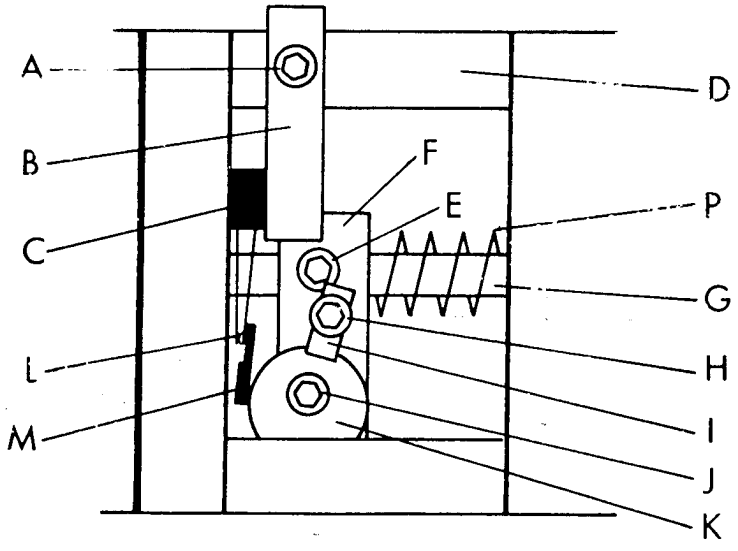

Figure II

(Use 3/32 allen wrench for set screws)

Trouble Shooting Guide

3.11.0.26.3 Alarm while only mimimum oxygen flow is activated
MPL switch needs adjustment or replacement

3.11.0.26.4. Alarm functions varv and cannot be reproduced
Clean the nitrous oxide resistor by blowing a high cxygen flow through it in the opposite direction of normal gas flow. If necessary perform the same procedure with the oxygen resistor

3.11.0.26.5. Nitrous oxide flow can be adjusted full flow independent from oxygen flow setting
O.R.M.c. requires disassembly and cleaning of the nitrous oxide needle valve

3.11.0.26.6. Nitrous oxide leak through O.R.M.c. bleeder hole
O.R.M.c. requires disassembly, lubrication and adjustment of O-rings

3.11.0.26.7. No nitrous oxide flow
Check for disconnect or leaks in 1/8" PVC tubing of the oxygen circuit

4.0.0.0. Service Procedures for Anesthesia Ventilator (Pneumatics)

4.1.0.0. **Installation of Bellows-Dome Assembly (Ascending and Descending)**

4.1.0.1. **Tools Required**

Allen wrench (3/16")

4.1.0.2. **Installation Procedure**

4.1.0.3. Remove the 4 (four) allen screws around the 7/8" hole on the left side of ventilator

4.1.0.4. Hold bellows-dome assembly with both hands and push 7/8" pipe stem with O-ring into pipe hole

4.1.0.5. Thread all 4 (four) allen screws through bellows-dome assembly bracket hand tight into the threaded holes of ventilator

4.1.0.6. Fasten allen screws in the following order:

1. Left upper screw
2. Right lower screw
3. Right upper screw
4. Left lower screw

4.1.0.7. Attach corrugated hose to manual/automatic selector valve

4.1.0.8. Attach 19mm scavenger hose

4.1.0.9. Test ventilator for proper operation

4.1.0.10. **NOTE:**
For removal of bellows-dome assembly follow the above procedure in reverse

4.1.1.0. Installation of Bellows-Dome Assembly (Old Style Descending)

4.1.1.1. Tools Required

Allen wrenches (3/16" and 5/32")
Adjustable open end wrench

4.1.1.2. Installation Procedure

4.1.1.3. Remove the 4 (four) allen screws on top of ventilator

4.1.1.4. Remove ventilator top

4.1.1.5. Loosen screw of right angle bracket which holds brass block with pilot actuator and turn 90 degrees to either side

4.1.1.6. NOTE:
This block is located approximately in the center of the left side of the ventilator

4.1.1.7. Push 7/8" pipe stem with O-ring of bellows-dome assembly through round hole in left side of ventilator, matching the 4 (four) bolts with the 4 (four) smaller holes

4.1.1.8. Apply a washer to each bolt from the inside of the ventilator and thread the 4 (four) hexagon nuts hand tight

4.1.1.9. Fasten hexagon nuts in the following order:

1. Left upper nut
2. Right lower nut
3. Right upper nut
4. Left lower nut

4.1.1.10. Press brass block with pilot actuator tightly on the 7/8" pipe stem of the bellows-dome assembly

4.1.1.11. Turn right angle bracket so that the vertical arm is pressed tightly against the brass block

4.1.1.12. Fasten allen screw which holds right angle bracket

4.1.1.13. Attach plastic tubing to hose barb of ventilator relief valve

4.1.1.14. Attach corrugated hose to manual/automatic selector valve

4.1.1.15. Attach 19mm scavenger hose

4.1.1.16. Test ventilator for proper operation

4.1.1.17. Replace ventilator top

4.1.1.18. NOTE:
For removal of bellows-dome assembly follow the above procedure in reverse

4.2.0.0. **Cleaning of Ventilator Relief Valve**
(see parts list 1101371 A - Ventilator Relief Valve)

4.2.0.1. **Tools Required**

Allen wrench (1/16")
Socket wrench (1/2")
Needle nose pliers or special NAD wrench

4.2.0.2. **Cleaning Procedure**

4.2.0.3. Remove corrugated tube from relief valve outlet

4.2.0.4. Remove plastic tubing from tubing connector

4.2.0.5. Loosen allen screw opposite from hose outlet on base of relief valve

4.2.0.6. Lift valve from base connector

4.2.0.7. Unscrew the chrome plated ring which holds plastic dome to valve body

4.2.0.8. Remove ring and plastic dome

4.2.0.9. Remove diaphragm with stop pole

4.2.0.10. With needle nose pliers, remove valve disc assembly from base of relief valve by turning counterclockwise

4.2.0.11. **NOTE:**
Do not puncture disc or bend spring with tips of needle nose pliers

4.2.0.12. Carefully dry and clean all parts thoroughly

4.2.0.13. Carefully install valve disc assembly into relief valve base by turning clockwise

4.2.0.14. Before installing diaphragm check that the threaded nylon disc tightly secures the diaphragm to the stop pole

4.2.0.15. Install diaphragm

4.2.0.16. Check that tubing connector is securely mounted to the plastic dome. If necessary fasten hexagon nut without damaging rubber washer

4.2.0.17. Replace plastic dome and fasten chrome plated ring

4.2.0.18. Mount relief valve on base connector

4.2.0.19. Turn valve assembly to easily connect corrugated hose

4.2.0.20. Fasten allen screw

4.2.0.21. Attach plastic tubing to tubing connector without kinking tubing

4.2.0.22. Check ventilator for proper operation

4.2.0.23. **NOTE:**
It is recommended to check ventilator bellows for exhaled humidity. If necessary, clean and dry bellows and corrugated hose

4.9.0.0. **Cleaning of Timing Resistors**

4.9.0.1. **Tools Required**

Allen wrench (5/32" - 9/64" for AM III and NM2)
Oxygen flowmeter with tubing

4.9.0.2. **Cleaning Procedure**

4.9.0.3. **NOTE:**
Cleaning of timing resistors may become necessary if foreign matter causes a variance in frequency

4.9.0.4. Turn ventilator switch OFF

4.9.0.5. Disconnect short plastic tubing of resistor from timing circuit

4.9.0.6. Disconnect plastic tubing which leads to capacitor from resistor

4.9.0.7. **NOTE:**
Remove only one resistor at a time. Do not reverse position of resistor when reconnecting

4.9.0.8. Remove resistor and clean by blowing oxygen through resistor in both directions

4.9.0.9. Reconnect resistor with short plastic tubing to timing circuit

4.9.0.10. Reconnect plastic tubing from capacitor

4.9.0.11. Repeat above procedure with other resistor

4.9.0.12. Turn ventilator ON and test performance

4.9.0.13. Replace ventilator top

4.10.0.0. Exchange of Ventilator on COMPACT

4.10.0.1. Tools Required

Allen wrenches (3/16" and 5/32")

4.10.0.2. Parts Required

Drager anesthesia ventilator with appropriate BPM

4.10.0.3. Exchange Procedure

4.10.0.4. Disconnect plastic tubing for ventilator relief valve from bellows-dome assembly

4.10.0.5. Disconnect 36" corrugated hose from bellows-dome assembly

4.10.0.6. Turn oxygen supply OFF and disconnect pressure hose from ventilator

4.10.0.7. Remove bellows-dome assembly (see 4.1.0.0.)

4.10.0.8. NOTE:
If old style bellows-dome assembly (see 4.1.1.0.)

4.10.0.9. Remove 4 (four) allen screws from underneath the ventilator support tray

4.10.0.10. Remove ventilator

4.10.0.11. Place new ventilator on top of support tray and fasten the 4 (four) allen screws from underneath

4.10.0.12. Mount bellows-dome assembly (see 4.1.0.0. or 4.1.1.0.)

4.10.0.13. Attach corrugated hose and plastic tubing

4.10.0.14. Attach pressure hose to ventilator and turn oxygen ON

4.10.0.15. Test ventilator performance

4.10.1.0. Exchange of Ventilator on NARKOMED STANDARD

4.10.1.1. Tools Required

Allen wrenches (3/16" and 5/32")
Open end wrench (7/16")
Regular screw driver

4.10.1.2. Parts Required

Drager anesthesia ventilator with appropriate BPM

4.10.1.3. Exchange Procedure

4.10.1.4. Disconnect plastic tubing for ventilator relief valve from bellows-dome assembly

4.10.1.5. Disconnect 36" corrugated hose from bellows-dome assembly

4.10.1.6. Turn oxygen supply OFF and disconnect pressure hose from ventilator

4.10.1.7. Remove bellows-dome assembly (see 4.1.0.0.)

4.10.1.8. NOTE:
If old style bellows-dome assembly (see 4.1.1.0.)

4.10.1.9. Remove back cover from flowmeter assembly compartment

4.10.1.10. Remove both allen screws which hold ventilator from underneath right hand support bracket (This is the support bracket on which the vaporizers are attached)

4.10.1.11. Remove bolts, lockwashers and washers from both ventilator mounts inside the flowmeter assembly compartment

4.10.1.12 Remove ventilator

4.10.1.13. Adjust short bracket on top of flowmeter assembly housing that both holes in bracket match holes in top of housing

4.10.1.14. Place new ventilator on both brackets with all 4 (four) mounts matching the corresponding holes

4.10.1.15. Apply washers, lockwashers and bolts on the 2 (two) mounts inside the flowmeter assembly compartment

4.10.1.16. Install the 2 (two) allen screws into the remaining 2 (two) mounts from underneath the right hand support bracket

4.10.1.17. Fasten both screws and both bolts

4.10.1.18. Replace back cover of flowmeter assembly compartment

4.10.1.19. Mount bellows-dome assembly (see 4.1.0.0. or 4.1.1.0.)

4.10.1.20. Attach corrugated hose and plastic tubing

4.10.1.21. Attach pressure hose to ventilator and turn oxygen ON

4.10.1.22. Test ventilator performance

4.14.0.0. **Removal of Adjustable Ventilator Relief Valve**
(see parts list 4106030 A - Ventilator Relief Valve, Ascending Bellows)

4.14.0.1. **NOTE:**
The adjustable ventilator relief contains a valve seat ball made of Teflon or Nylon. The Teflon ball may be exchanged with a ball made of Nylon which will optimize performance at minimizing PEEP on ascending bellows systems

4.14.0.2. **Tools Required**

Allen wrenches (1/16" and 3/32")
Needle nose pliers
Patient Breathing Circuit with Y-piece
Drager Training Thorax

4.14.0.3. **Removal Procedure**

4.14.0.4. Loosen allen screw opposite from scavenger hose outlet on the base of the relief valve

4.14.0.5. Remove ventilator relief valve from base connector

4.14.0.6. Remove black valve seat assembly from the bottom of the relief valve by inserting needle nose pliers tip into the 2 (two) holes on the valve seat assembly

4.14.0.7. Remove retaining pin from valve seat assembly

4.14.0.8. Exchange the valve seat ball with the replacement nylon valve seat ball

4.14.0.9. Reinstall retaining pin on the valve seat assembly and insure the teflon sealing washer is still in place

4.14.0.10. Replace the valve seat assembly into the bottom of the relief valve and tighten

4.14.0.11. Replace the adjustable ventilator relief valve to the base connector until it is fully seated and tighten the set screw

4.14.0.12. Check the 19mm scavenger tube and 1/4" plastic tube for proper connection

4.14.0.13. **NOTE:**
Check the 19mm scavenger tubes for humidity and the scavenger system for proper adjustment (see the appropriate instruction manual for Scavenger Interface Systems)

4.14.1.0. Testing Procedure for Adjustable Ventilator Relief Valve

4.14.1.1. Connect the patient breathing circuit with Drager Training Thorax to inspiratory and expiratory valves of the Absorber System

4.14.1.2. Turn main switch of machine ON (if applicable) and ventilator switch ON

4.14.1.3. Set following parameters:

Oxygen Flow Rate.....500cc
Tidal Volume.....1200cc
Frequency.....10 breaths per minute
Ventilator Flow Control.....center of medium range

4.14.1.4. NOTE:
Under the above conditions, the bellows must completely inflate and PEEP shall not exceed 2cm H_2O on the absorber pressure gauge. Follow procedure 4.14.2.0. if adjustment is needed

4.14.2.0. Adjustment Procedure for Adjustable Ventilator Relief Valve

4.14.2.1. Tools Required

Allen wrench (3/32")

4.14.2.2. Adjustment Procedure

4.14.2.3. With a 3/32" allen wrench loosen the chromeplated ring which locks the elbow and diaphragm assembly to the plastic dome

4.14.2.4. NOTE:
A hole in the side of the chromeplated ring allows for locking and unlocking

4.14.2.5. Turning the elbow assembly counterclockwise will lift the diaphragm from the valve seat and thus decrease the PEEP

4.14.2.6. NOTE:
This procedure may create a leak and may cause the bellows not to inflate completely

4.14.2.7. Turning the elbow assembly clockwise will move the diaphragm towards the valve seat and thus increase the PEEP

4.14.2.8. NOTE:
Adjustment of the diaphragm is correct when the results under test procedure 4.14.1.3. are obtained

4.14.2.9. Lock chromeplated ring on elbow and diaphragm assembly after final adjustment

5.0.0.0. Service Procedures for Electronic and Monitoring Equipment

5.1.0.0. Exchange of Electronic Circuit Board of AM III

5.1.0.1. Tools Required

Allen wrench (2mm)

5.1.0.2. Parts Required

Electronic circuit board for AM III

5.1.0.3. Exchange Procedure

5.1.0.4. Turn oxygen and nitrous oxide gas supply OFF

5.1.0.5. Remove back cover of battery compartment

5.1.0.6. Disconnect wire with line fuse from positive battery terminal

5.1.0.7. Remove back cover of flowmeter assembly compartment

5.1.0.8. The following steps have to be followed before the electronic circuit board can be removed

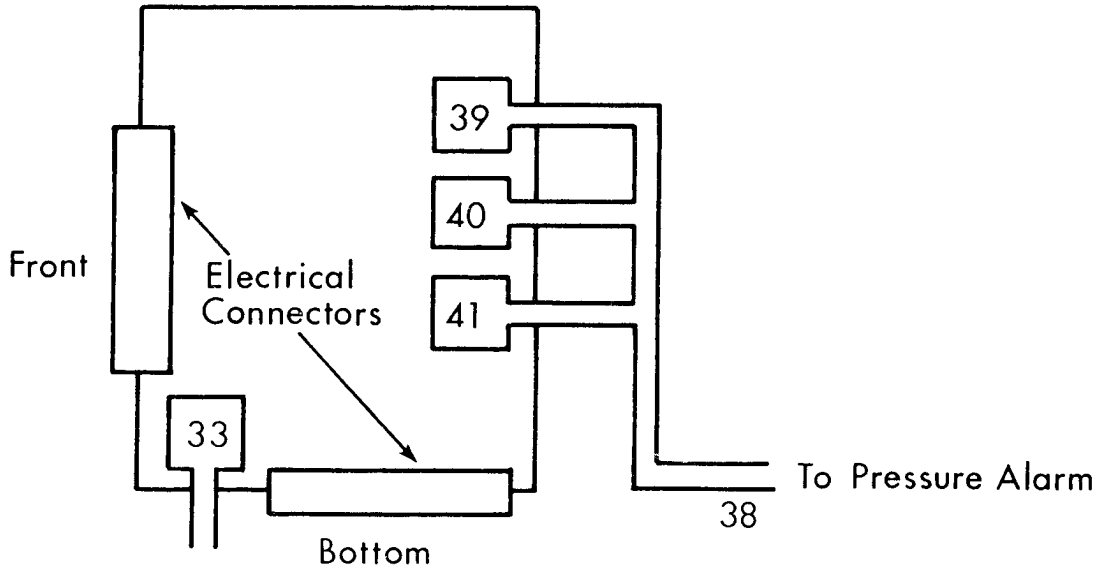

5.1.0.9. Trace plastic tubing from pressure switches. The lines are marked 39, 40, and 41. All three lines are combined into one line #38 which is connected to the pressure alarm outlet

5.1.0.10. Disconnect plastic tubing #38 from pressure alarm outlet

5.1.0.11. Disconnect wire harness from connector on the bottom of circuit board

5.1.0.12. Remove circuit board by pulling carefully towards back

5.1.0.13. NOTE:
Always touch circuit board along edges - Never touch electronic components

5.1.0.14. Disconnect plastic tubing #33 from pressure switch on circuit board

5.1.0.15. Attach plastic tubing #33 to pressure switch on the left lower corner of the replacement circuit board

Exchange Procedure

NOTE:

5.1.0.16. Connect wire harness connector to bottom of circuit board

5.1.0.17. **NOTE:**
Make certain that contacts line up properly and that no contacts are bent or twisted

5.1.0.18. Carefully press circuit board into connector of alarm panel

5.1.0.19. Connect plastic tubing #38 to pressure alarm outlet

5.1.0.20. Connect wire with line fuse to positive terminal of battery

5.1.0.21. Turn oxygen and nitrous oxide gas supply ON

5.1.0.22. Test all alarm functions

5.1.0.23. **NOTE:**
Check for loose connections if alarms do not operate properly

5.1.0.24. Replace both compartment covers

5.3.0.0. Exchange of Electronic Circuit Board of NARKOMED 2 - Old Style

5.3.0.1. Tools Required

Allen wrench (2mm)

5.3.0.2. Parts Required

Electronic circuit board for NARKOMED 2

5.3.0.3. Exchange Procedure

5.3.0.4. Turn oxygen and nitrous oxide gas supply OFF

5.3.0.5. Open battery compartment and disconnect wire with line fuse from positive battery terminal

5.3.0.6. Remove back cover of flowmeter assembly compartment

5.3.0.7. Disconnect 1/4" plastic tubing from pressure alarm outlet (see sketch)

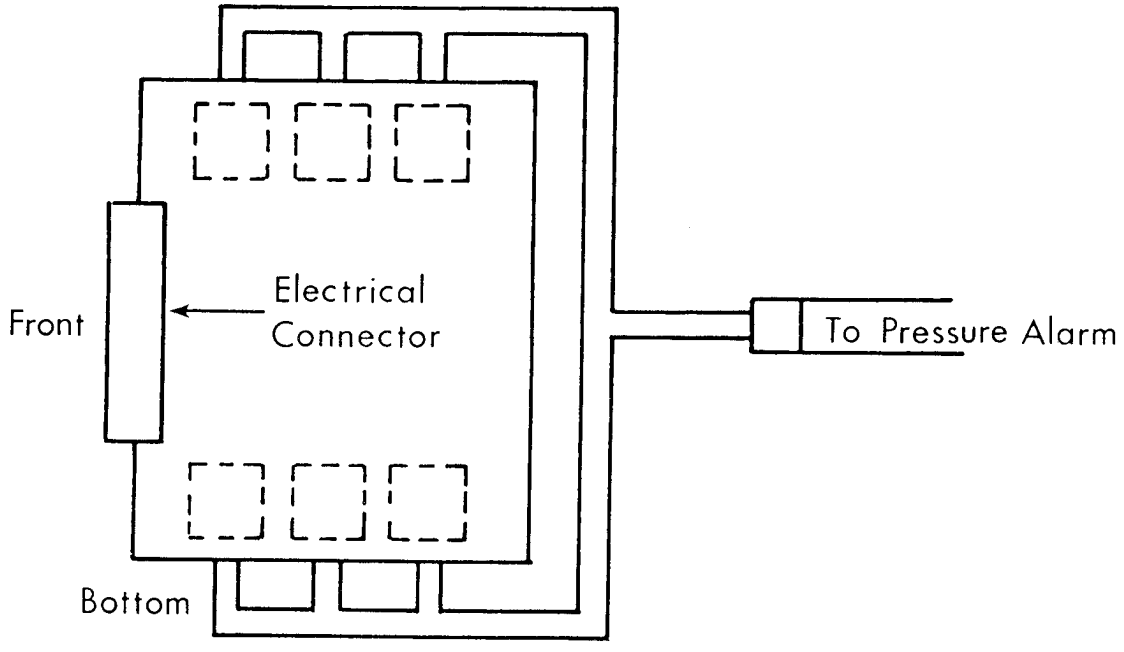

5.3.0.8. Remove circuit board by pulling carefully towards back

5.3.0.9. NOTE:
Always touch circuit board along edges - Never touch electronic components

5.3.0.10. Attach 1/4" plastic tubing of replacement circuit board to pressure alarm outlet

5.3.0.11. Carefully press circuit board into connector of alarm panel

5.3.0.12. NOTE:
Make certain that contacts line up properly and that no contacts are bent or twisted

5.3.0.13. Connect wire with line fuse to positive terminal of battery

Exchange Procedure

NOTE:

5.3.0.14. Turn oxygen and nitrous oxide gas supply ON

5.3.0.15. Test all alarm functions

5.3.0.16. **NOTE:**
Check for loose connections if alarms do not operate properly

5.3.0.17. Replace back cover of flowmeter assembly compartment

5.3.0.18. **NOTE:**
There are various P.C. Boards available for NARKOMED 2 Anesthesia Machines. Refer to the section Schematics/Diagrams for proper identification

5.3.1.0. **Exchange of Electronic Circuit Board of NARKOMED 2A**
(see parts list 4106674 A - Printed Circuit Board Assembly)

5.3.1.1. **Tools Required**

Allen wrenches
Screw drivers

5.3.1.2. **Parts Required**

Electronic circuit board for NARKOMED 2A

5.3.1.3. **Exchange Procedure**

5.3.1.4. Turn oxygen and nitrous oxide gas supply OFF

5.3.1.5. Unplug electric power cord

5.3.1.6. Remove back cover of flowmeter assembly compartment

5.3.1.7. Disconnect 1/4" plastic tubing from pressure alarm outlet and remove mounting screw on outside of flowmeter housing immediately below 4 (four) pin power plug assembly (see parts list 4104053)

5.3.1.8. Remove circuit board by pulling carefully towards back

5.3.1.9. **NOTE:**
Always touch circuit board along edges - Never touch electronic components

5.3.1.10 Attach 1/4" plastic tubing of replacement circuit board to pressure alarm outlet

5.3.1.11. Carefully press circuit board into connector of alarm panel and replace mounting screw

5.3.1.12. **NOTE:**
Make certain that contacts line up properly and that no contacts are bent or twisted

5.3.1.13. Plug electric power cord into 117 VAC outlet

5.3.1.14. Turn oxygen and nitrous oxide gas supply ON

5.3.1.15. Test all alarm functions

5.3.1.16. **NOTE:**
Check for loose connections if alarms do not operate properly

5.3.1.17. Replace back cover of flowmeter assembly compartment

5.6.0.0. Testing Procedure for Pressure Switches

5.6.0.1. The simultaneous activation of the sub-atmospheric and high pressure LED's indicates one or more pressure switches are malfunctioning. If the damaged switch cannot be detected by following the test procedure (paragraphs 14.0 to 17.0 of the Preventive Maintenance Service Test Procedures), the switches must be tested individaully

5.6.0.2. A pressure switch tester must be used (see section Test Instruments) or a test circuit shown in this procedure

5.6.0.3. NOTE:
See section Schematics/Diagrams for correct values of pressure switches

5.6.1.0. Testing Procedure for Positive Pressure Dehart Switches

5.6.1.1. Turn main switch OFF (NARKOMED 2 and AM III) and disconnect battery terminal wires

5.6.1.2. Remove back panel of flowmeter assembly compartment

5.6.1.3. Remove circuit board and disconnect plastic tubing from coupling (6" below circuit board)

5.6.1.4. NOTE:
Do not touch or ground contacts of electrical terminal strip on circuit board

5.6.1.5. Mark the port of the Dehart switch which has the plastic tubing attached and then remove tubing

5.6.1.6. Lift switch from the electrical connector

5.6.1.7. Attach the test circuit or pressure switch tester to the same hose barb from which the plastic tubing was removed

5.6.1.8. Attach the leads of the Ohmmeter or pressure switch tester to electrical contacts of the Dehart switch

5.6.1.9. Slowly force the plunger into the syringe. Ohmmeter will show 0 (zero) ohms when correct pressure is reached, or Sonalert will be activated if pressure switch tester is used

5.6.1.10. If Ohmmeter or Sonalert is activated before or after the proper pressure is reached and is not within tolerances (see 5.6.7.0.) the switch must be replaced with a switch of equivalent value

5.6.1.11. Connect switch to the correct electrical connector on the circuit board

5.6.1.12. Attach plastic tubing to the correct port and install mounting screws and spacers

5.6.1.13. NOTE:
Do not fasten mounting screws too much as it may change the threshold tolerance of the switch

5.6.2.0. Testing Procedure for Negative Pressure Dehart Switches

5.6.2.1. The above procedure should be followed to test the sub-atmospheric pressure switch (-10cm H_2O) except:

5.6.2.2. A negative test pressure must be created by slowly drawing the syringe plunger until (-10cm H_2O) are reached

5.6.3.0. Install circuit board, connect battery terminals and test alarm functions

5.6.4.0. Testing Procedure for Positive Pressure MPL Switches (Micro Pneumatic Logic)

5.6.4.1. Turn main switch OFF (NARKOMED 2 and NARKOMED 2A) and disconnect battery terminal wires or disconnect electrical power supply

5.6.4.2. Remove back panel of flowmeter assembly compartment

5.6.4.3. Remove circuit board and disconnect plastic tubing from switch manifold

5.6.4.4. NOTE:
Do not touch or ground contacts of electrical terminal strip on circuit board

5.6.4.5. Disconnect the plastic tubing from the switch to be tested

5.6.4.6. Attach the test circuit or pressure switch tester to the same hose barb from which plastic tubing was removed

5.6.4.7. Attach leads of Ohmmeter or pressure switch tester to electrical contact of the MPL switch

5.6.4.8. Slowly force plunger into the syringe. Ohmmeter will show 0 (zero) ohms when correct pressure is reached, or Sonalert will be activated if pressure switch tester is used

5.6.4.9. If Ohmmeter or Sonalert is activated before or after the proper pressure is reached the pressure threshold can be adjusted by turning the adjustment screw of the MPL switch:

clockwise - to decrease pressure threshold
counterclockwise - to increase pressure threshold

5.6.4.10. Connect switch to the correct electrical connector on the circuit board

5.6.4.11. Attach plastic tubing to the correct port

5.6.5.0. Testing Procedure for Negative Pressure MPL Switches

5.6.5.1. The above procedure should be followed to test the sub-atmospheric pressure switch (-10cm H_2O) except:

5.6.5.2. The shorter hose barb of the MPL switch must be connected to the test circuit

5.6.5.3. A negative pressure must be created by slowly drawing the syringe plunger until -10cm H_2O are reached

5.6.6.0. Install circuit board, connect battery terminals or power supply and test alarm functions (follow procedures 5.8.0.0. when the P.C. Board of a NARKOMED 2A was removed)

5.6.7.0. Tolerances

5.6.7.1. Switches above 15cm H_2O: ± 10%
Switches 15cm H_2O and below: ± 15%

5.6.7.2. NOTE:
cm H_2O gauge should be calibrated against water column gauge to assure correct measurements

5.6.7.3. 10 seconds delay: ± 1.0 seconds
15 seconds delay: ± 1.5 seconds
30 seconds delay: ± 5.0 seconds
60 seconds delay: ± 6.0 seconds

TESTING OF PRESSURE SWITCHES

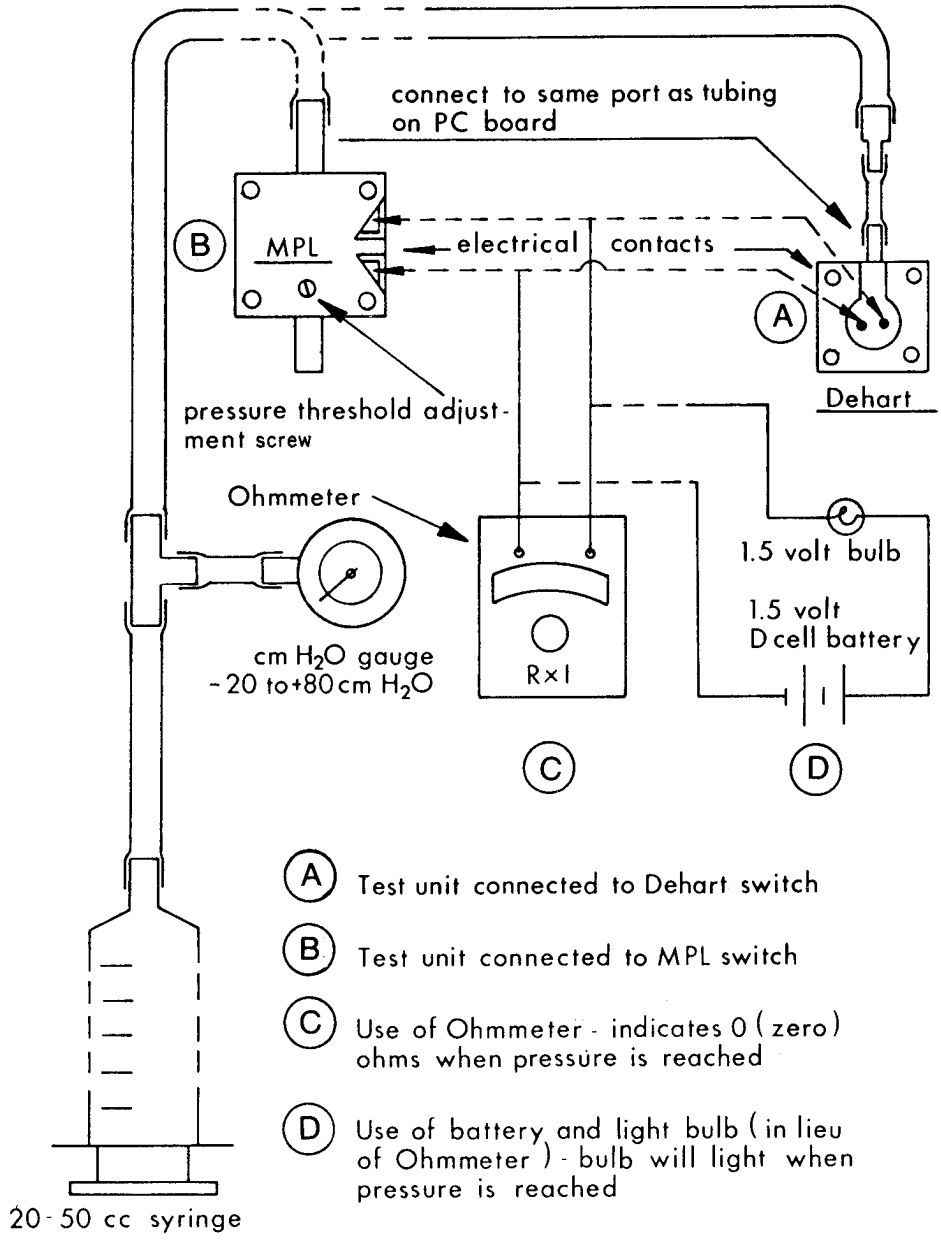

Figure I

5.7.0.0. Trouble Shooting of NARKOMED 2A Electric Wire Harness

5.7.0.1. NOTE:

This procedure applies only when the Chassis Isolation Test (Preventive Maintenance Procedure 23.0) indicates that a 5 VDC or 9 VDC plus voltage is measured on pin 1 (chassis ground) and pin 2 (signal ground) of the Oxymed Power Outlet

5.7.0.2. Tools Required

Allen wrenches
Micronta Multimeter 22-191 (Radio Shack) or equivalent (set at 20 VDC)
Flat screw driver

5.7.0.3. Trouble Shooting Guide

5.7.0.4. Remove back panel of flowmeter compartment

5.7.0.5. Disconnect hospital medical gas supply, turn all E-cylinders off and depressurize anesthesia system

5.7.0.6. Plug power cord into 117 VAC electric outlet

5.7.0.7. Turn N_2O/Air switch to N_2O position (when applicable)

5.7.0.8. Turn main switch ON

5.7.0.9. Turn ventilator switch ON

5.7.0.10. Turn flowmeter lights ON (when applicable)

5.7.0.11. Turn all NAD monitors on which are directly connected to the power supply (e.g. Spiromed - when applicable)

5.7.0.12. Connect the multimeter negative probe (black to pin 2 - signal ground) and the positive probe (red to pin 1 - chassis ground) of the Oxymed Power Outlet

5.7.0.13. Follow procedure 5.7.1.0. if the multimeter indicates between 9 VDC and 13.5 VDC between pin 1 and pin 2

5.7.0.14. Follow procedure 5.7.2.0. if the multimeter indicates approximately 5 VDC between pin 1 and pin 2

	9-13.5 VDC	Action To Be Taken (see SKOBO32)
5.7.1.0	Voltage	Disconnect electric connector of red wire to Oxymed Power Outlet.
5.7.1.1	No Voltage Voltage	Examine power outlet and if necessary replace. Disconnect red wire (terminal 2) on power supply.
5.7.1.2	No Voltage Voltage	Examine wire harness (red wire) between terminal 2 of power supply and electrical connector to Oxymed Power Outlet. Replace if necessary. Disconnect monitor (Spiromed) from power supply.
5.7.1.3	No Voltage Voltage	Return monitor to factory for repair. Replace power supply.

5.7.1.4 Follow the same procedure if 9 VDC plus measured between pins 1 and 2 while battery power is used. The orange wire on terminal 3 of the power supply provides the battery power.

	5 VDC	Action To Be Taken (see SKOBO32)
5.7.2.0	Voltage No Voltage	Disconnect electrical connectors to ORMc (when applicable). Adjust ORMc according to procedure 3.11.0.0.
5.7.2.1	Voltage No Voltage	Remove orange/white wire from NC terminal of 30 psi pressure switch. Replace 30 psi pressure switch.
5.7.2.2	Voltage No Voltage	Remove ventilator top and locate AV-E terminal strip. Remove red wire leading to electronic ventilator. Check electronic ventilator for bare wire contacting chassis, terminal screws touching chassis, etc.
5.7.2.3	Voltage No Voltage	Remove red wire leading to flowmeter lights. Check entire flowmeter light system for bare wire touching chassis ground.
5.7.2.4	Voltage No Voltage	Remove red wire leading to minimum ventilation pressure switch (activated by ventilator ON/OFF switch). Check that terminal screws of minimum ventilator switch DO NOT contact piping system.
5.7.2.5	Voltage	Remove red wire on AV-E terminal strip which originates from plug on alarm channel.
5.7.2.6	Voltage	Replace alarm channel and plug-in PC Board.

WIRE HARNESS - NM2A

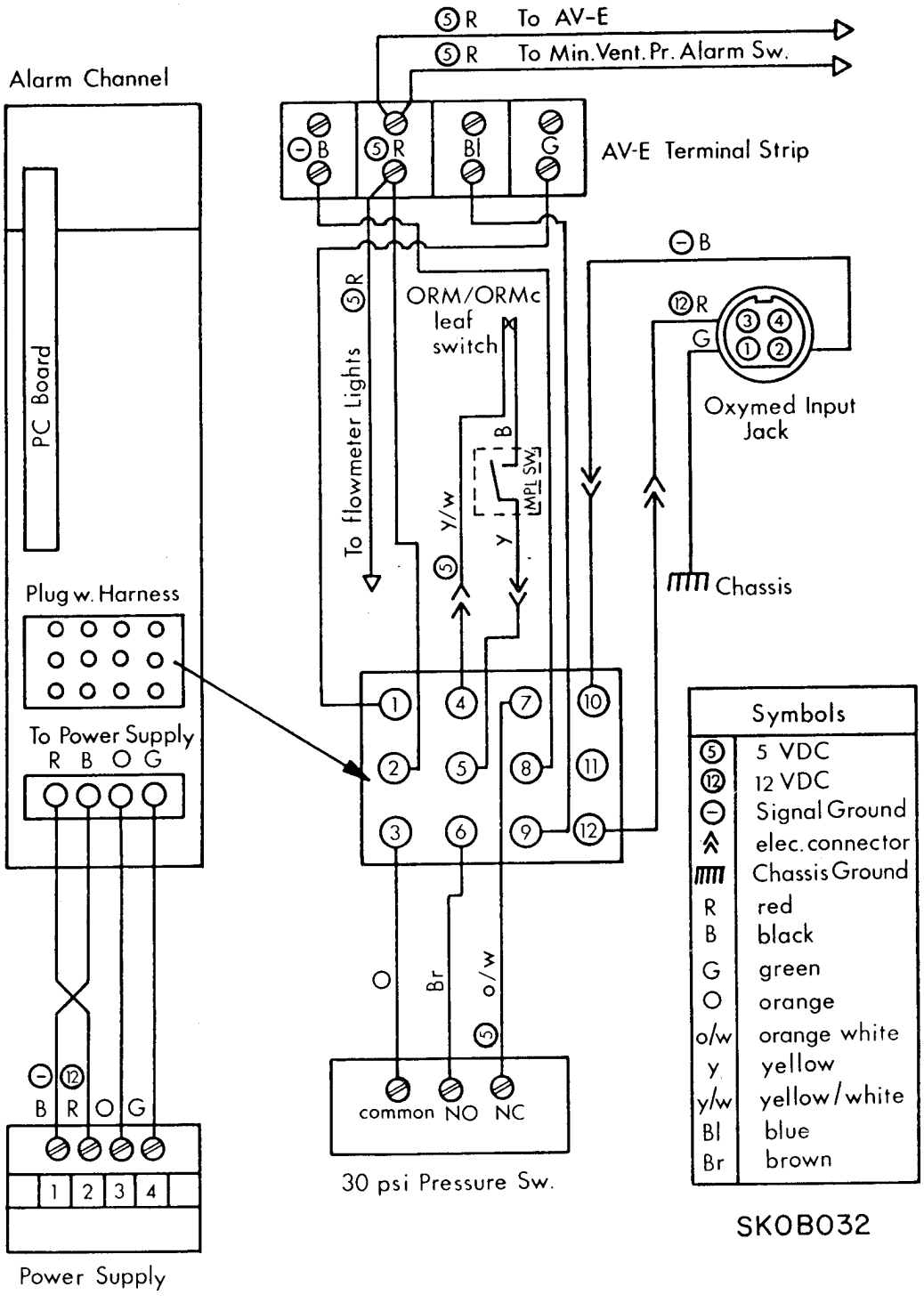

5.8.0.0. Testing Procedure for P.C. Boards on NARKOMED 2A

The following test must be performed whenever the P.C. Board on a NARKOMED 2A is temporarily removed or replaced with a different circuit board

5.8.0.1. Disconnect hospital medical gas pipeline, turn all E-cylinders on NARKOMED 2A OFF and depressurize system

5.8.0.2. Unplug AC electric cord from electric outlet

5.8.0.3. Turn main switch ON (ventilator switch OFF)

5.8.0.4. The following LED's must be activated:

- Green LED - main switch ON
- Yellow LED - reserve power activated. A short beep will sound every minute
- Yellow LED - 30 second delay of all audio alarm functions
- Oscillating Red LED's - O_2 Supply pressure

5.8.0.5. Activate medical gas supply (hospital pipeline or E-cylinders) The oxygen supply pressure alarm will be deactivated. Plug in AC cord

5.8.0.6. With main switch in the ON position, unplug the AC cord. Check that only the green LED (main switch ON) and the yellow LED (reserve power act) are activated

5.8.0.7. NOTE:
The yellow LED of the disable function **must not turn on**.

5.8.0.8. Plug AC cord into electrical outlet and turn main switch OFF

5.8.1.0. Testing Procedure for Alarm Circuit Delay Test

5.8.1.1. Turn on main switch of machine. Immediately upon turning on the main switch, the audible alarm delay function will start; it will continue for 30 (thirty) seconds. The yellow LED, below the Sonalert alarm on the alarm panel of the machine, will be activated during the 30 (thirty) second delay cycle

5.8.1.2. Upon completion of the automatic delay, test the function of the manually activated delay. Manual delay is operated by activating the push-button located adjacent to the yellow LED on the alarm panel. The manual delay is also 30 (thirty) seconds in duration and includes the LED function

5.8.1.3. NOTE:
Alarm functions that occur during the course of the delay operation are indicated by red LED's on the alarm panel. These LED's will continue to operate at any time that an alarm condition exists regardless of the delay

5.8.1.4. Activation of the high pressure and sub-atmospheric LED's simultaneously is indication of a system failure detected by the alarm logic circuit. This requires testing of individual pressure switches

5.8.2.0. **Audio Disable**

The audio disable button should be pushed whenever an alarm function is tested. The audio can only be cancelled for alarm functions which are preceeded by a diamond. The red LED's will continue to operate. Pushing the disable button again will restore the audio

5.8.3.0. **O.R.M. and O.R.M.C. Alarm Function**

Create an O.R.M. or O.R.M.C. alarm function (see procedures 18.0 and 19.0 in the Preventive Maintenance Manual) The red LED's must oscillate. The audio portion of this alarm can be disabled

5.8.4.0. The following alarm functions must be checked with a pressure switch tester (see Service Manual for specifications and tolerances)

5.8.5.0. **High Pressure**

Increase pressure to 65cm H_2O. Audio can be disabled

5.8.6.0. **Sub-atmospheric Pressure**

Decrease pressure to -10cm H_2O. Audio can be disabled

5.8.7.0. **Continuing Pressure**

Increase pressure to 30cm H_2O. Alarm should activate in 10 (ten) seconds. Decrease pressure slowly. Alarm should deactivate at 17cm H_2O. Audio can not be disabled

5.8.8.0. **Minimum Ventilation Pressure**

5.8.8.1. **NOTE:**
While testing the mimimum ventilation pressures, observe the NAD ventilator for proper performance

5.8.8.2. Set selector switch to 8cm H_2O (7.5.) Turn ventilator switch to 12 o'clock position. Increase pressure to 15cm H_2O and slowly decrease to 0cm H_2O. Alarm should be activated 15 (fifteen) seconds after the pressure passes 8cm H_2O (7.5.) during the downward cycle. The audio can not be disabled for any minimum ventilation pressure alarm conditions

5.8.8.3. Set selector switch to 12cm H_2O (12.5.) Increase pressure to 20cm H_2O and slowly decrease again. Alarm should be activated 15 (fifteen) seconds after the pressure passed 12cm cm H_2O. Audio can be disabled during the downward cycle

5.8.8.4. Repeat procedure for 26cm H_2O (25) setting

5.8.8.5. Set ventilator switch at 6 o'clock position and repeat above procedures. The time delay should be 60 (sixty) seconds until the alarm is activated

5.8.9.0. **Logic Alarm**

A simultaneous activation of the high pressure and the sub-atmospheric pressure alarms indicates a system failure and requires individual testing of pressure switches (see 5.6.0.0.)

5.8.10.0. Turn ventilator OFF, turn main switch OFF and activate oxygen flush button for 2-3 seconds