Penlon

AV-S Ventilator

Introduction

Partnership for Life

AV-S Ventilator

- Product Overview
  - Introduction
  - Characteristics
  - Configuration
  - Sub-assemblies

AV-S Ventilator

- Operation
  - Ventilator control settings
  - Operation workshop
    - Pre-operative checkout procedure

AV-S Ventilator

- TECHNICAL DESCRIPTION
  - AV-S Pneumatic description.
  - AV-S Electrical description.

AV-S Ventilator

- Practical:
  - Disassembly.
  - Planned maintenance.
  - Test and calibration procedures.
  - Fault finding.

InterMed Penlon

AV S ventilator

Product Overview

Partnership for Life

Aims and Objectives

- Aim:
  - The aim of this module is to give the student a full understanding of the features and characteristics of the AV-S ventilator.
- Objective:
  - By the end of this module the student will be able to:
    - Describe the features of the AV-S.
    - Recognise user controls.
    - Recognise AV-S configuration.

AV-S Ventilator

- Pneumatically driven.
- Software controlled.
- Multi-mode ventilator.
  - Time-cycled, volume/pressure controlled and pressure limited.
- Compliance & fresh gas compensated.
- User adjustable sigh & inspiratory pause.

AV-S monitoring

Integrated monitoring:

- Inspired oxygen measurement.
  - Measured from inspiratory limb.
- Airway pressure measurement.
  - Measured in the expiratory limb.
- Tidal/Minute volume measurement.
  - Dual spirometry system.

AV-S features

- Large 8.4” high definition colour screen.
  - Touch screen.
  - Rotary control dial.
- Single/ Dual waveform display.
- Designed to integrate with:
  - PrimaSP; SP2 and SP3.
  - A100SP; A200SP.

AV-S features

- Print outs & interfacing:
  - USB, Serial Port, Analogue outputs, HPPCL4 printer output.
- 30 minutes battery back up as standard:
  - Optional 60 minute battery available.

Penlon

AV-S features

Membrane keys

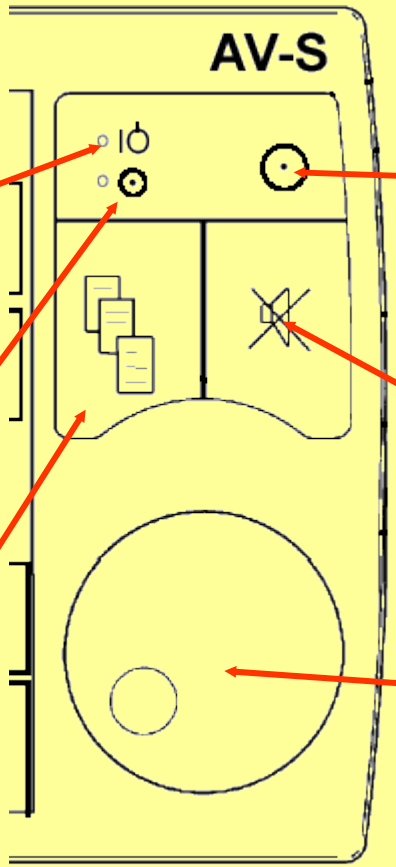

LED power indicators:
Yellow when connected /battery charging

LED on/off indicator.
Green when switched on

Menu selection key

On/Off Switch

Alarm silence/mute key.

Rotary control dial.

Modes of ventilation

- Mandatory modes:
  - Volume Mode.
  - Pressure Mode.

- Spontaneous breathing support modes:
  - SIMV.
  - SMMV.
  - Pressure Support.

Modes of ventilation

Volume Controlled Ventilation

- AV-S delivers a mandatory set volume of gas at fixed breath intervals.
  - The Patient is making no respiratory effort.

- AV-S is volume limited and time cycled.
  - Tidal volume setting range, 20 to 1600ml.
  - Inspiration terminated after a preset time.

Penlon

Modes of ventilation

- Airway Flow and Pressure Patterns

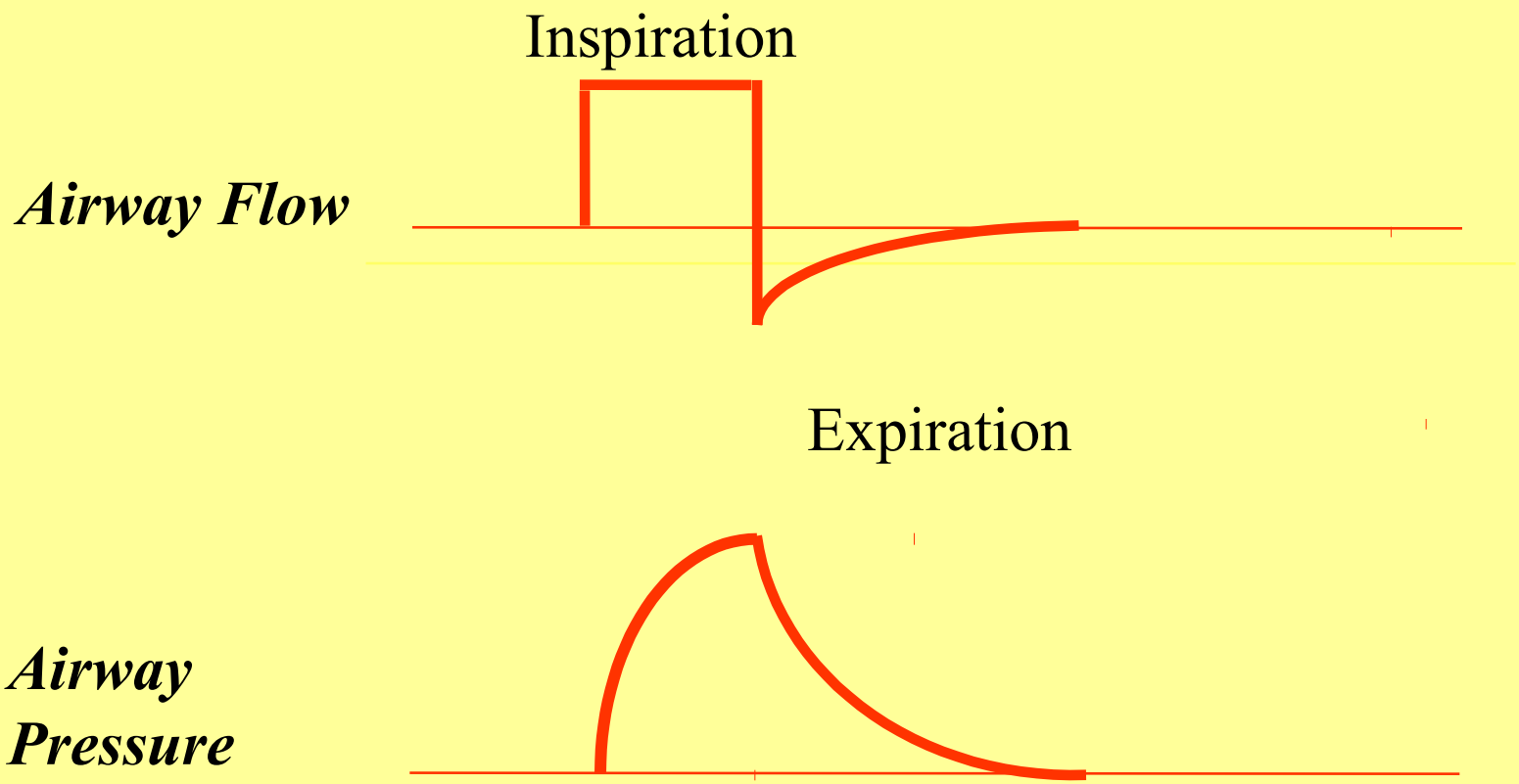

Modes of ventilation

Volume ventilation parameter limits:

- Tidal volume adjustable from **20 – 1600 mL**
- Rate adjustable from **4 – 100 bpm**
- I:E ratio adjustable from **1:0.3 – 1:8**
- Peep 'Off' or adjustable from **4 – 20 cmH_2O**
- Inspiratory pressure limit from **10 to 80 cmH2O**
- Inspiratory pause **0-60%**
  - Does not affect I:E ratio
- Sigh **1.5 x Set Vt**
  - Adjustable 1:10 to 1:100 breaths

InterMed Penlon

1.87.xx display

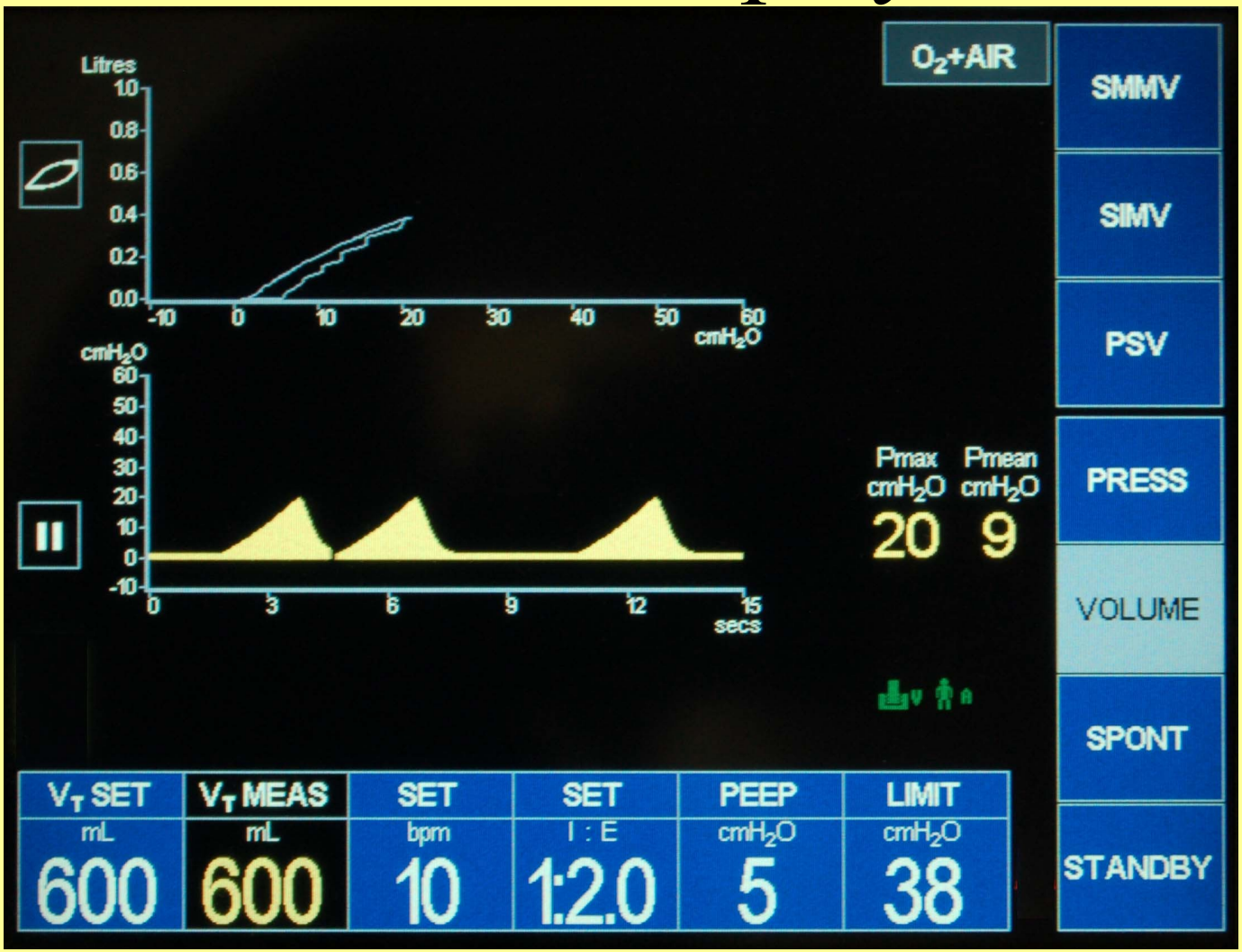

Fresh Gas Compensation

AV-S uses spirometry information to adjust for:

- Gas added to the system from the anaesthesia machine.
- Losses in the system:
  - Gas compliance.
- Maximum adjustment - 60% of set tidal volume.
- Alarms if measured volume 50% different than set.
  - Alarm is user adjustable.
- Ambient pressure compensation.
  - Adjusts delivered volume accordingly.

Compliance Compensation

- Corrects volume delivery for pressure losses in Circuit.
- Used if Fresh Gas Compensation is off.
  - Switched off or Spirometry not available.
- Requires Breathing Circuit Compliance measurement.
  - Carried out as pre-use check.
- Does not compensate for additional gas from anaesthesia machine.

Modes of ventilation

Pressure controlled ventilation.

- Delivers a volume of gas to achieve a set pressure at fixed breath intervals.
  - The Patient is making no respiratory effort.

Modes of ventilation

Pressure controlled ventilation

- AV-S is Pressure limited and time cycled.
  - Pressure setting range, 5 to 70cmH_2O.
  - Inspiration terminated after a preset time.
  - Decelerating staged flow delivery.
    - Reduces Inspiratory flow rate at 75% target pressure.
  - Dynamic continuous flow control.

Penlon

Modes of ventilation

- Airway Flow and Pressure Patterns

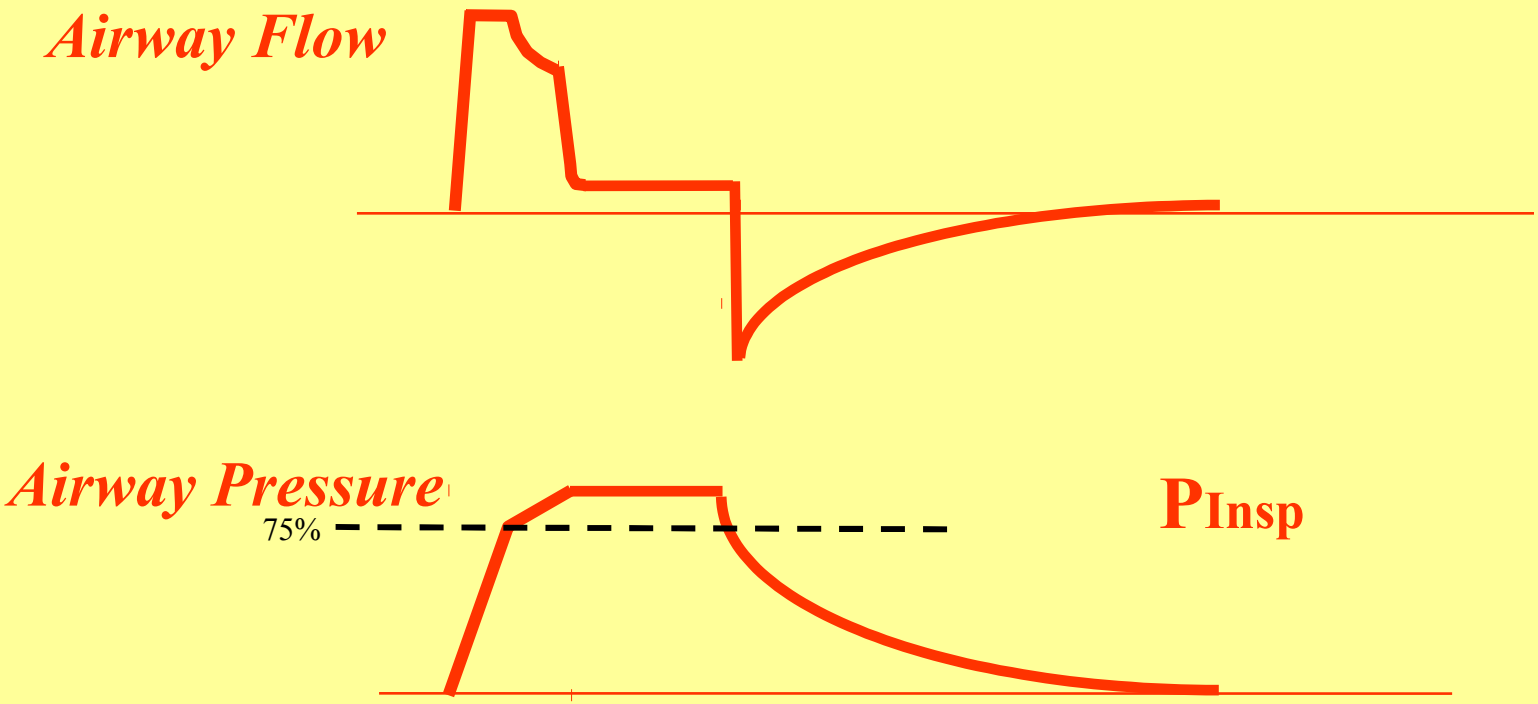

Modes of ventilation

Pressure ventilation parameter limits:

- Inspiratory pressure adjustable **5 - 70 cmH_2O**
- Rate adjustable from **4 – 100 bpm**
- I:E ratio adjustable from **1:0.3 – 1:8**
- Peep 'Off' or adjustable from **4 – 20 cmH_2O**
  - Maintains 10 cmH_2O PEEP/Target differential
- Optimised Inspiratory flow rate
  - Decelerated staged flow

Modes of ventilation

Spontaneous respiration mode:

- Absorber must be in '**Bag**' mode.
  - Patient parameters monitored.
    - Rate, I:E, Pressure, Tidal volumes Inspiratory oxygen.

InterMed Penlon

Software 1.87 xx

Partnership for Life

Modes of ventilation

Special / Support modes:

- SIMV, SMMV & PSV.
  - These must be pre-selected.
  - Absorber must be switched to '**Vent**' mode.

Penlon

Modes of ventilation

Selecting Support Modes:

‘Standby’

↓

‘Special Modes’

↓

‘Select Mode(s)’

Penlon

Modes of ventilation

Using Support Modes:

- Touch special mode on-screen key x2 to select and confirm mode.
- Ensure absorber is switched to ‘Vent’ mode.
- Adjust ventilation parameters as required.

Modes of ventilation

- SIMV/SMMV/PSV are used when a patient's spontaneous respiratory rate, effort or tidal volume drops:
  - Due to a deepening of the depth of anaesthesia.
  - A safety net for a weak spontaneously breathing patient.
- Used differently than in intensive care.

Modes of ventilation

Synchronised Intermittent Mandatory Ventilation

- Mandatory breaths delivered at a wide interval.
- Patient breathes spontaneously between mandatory breaths.
- Mandatory breath is synchronised with a patient breath.
- If no patient breath a mandatory breath is still delivered.
- Guarantees a minimum level of volume ventilation.

Penlon

SIMV spontaneously breathing patient

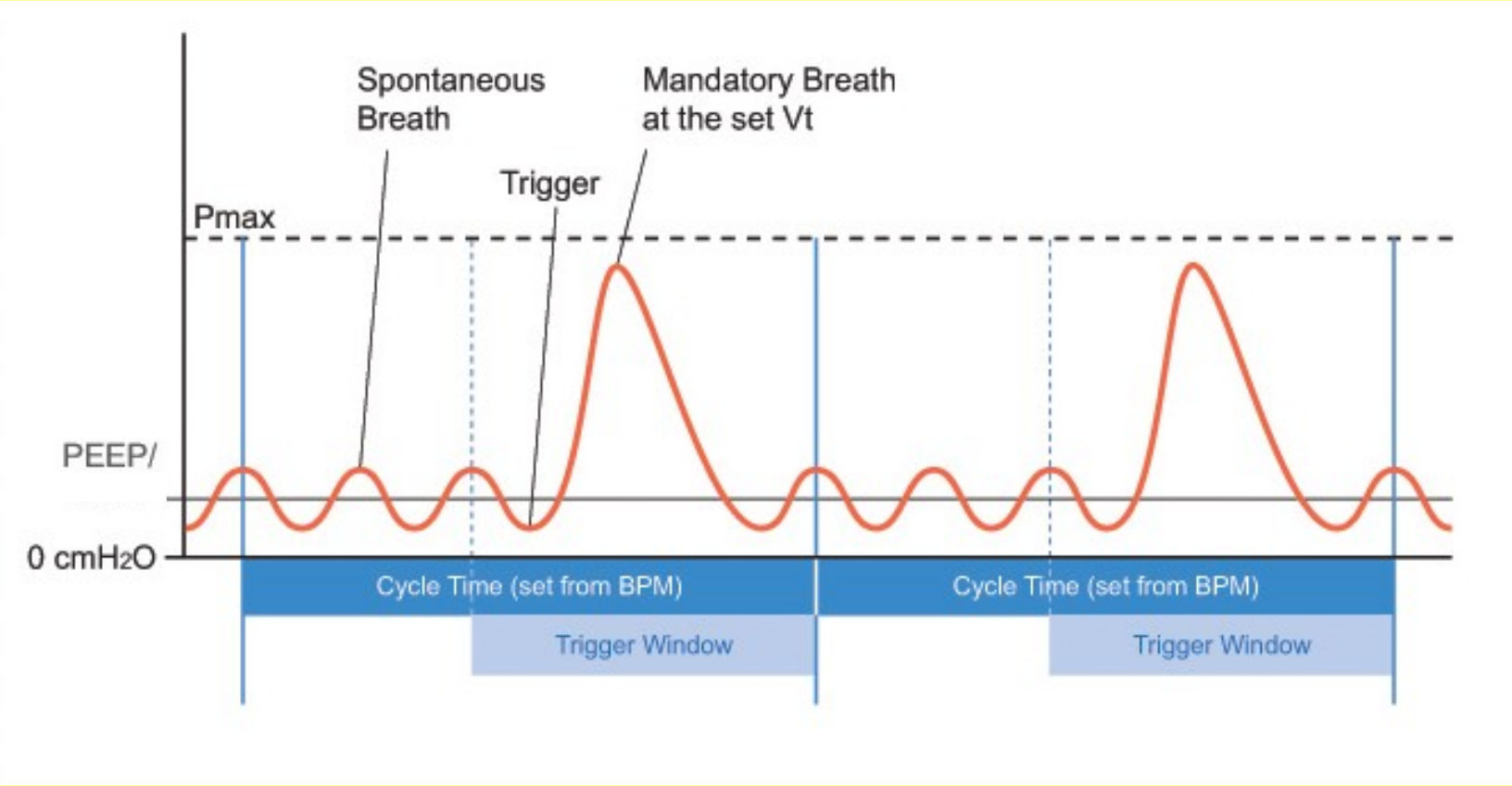

Penlon

SIMV non-breathing patient

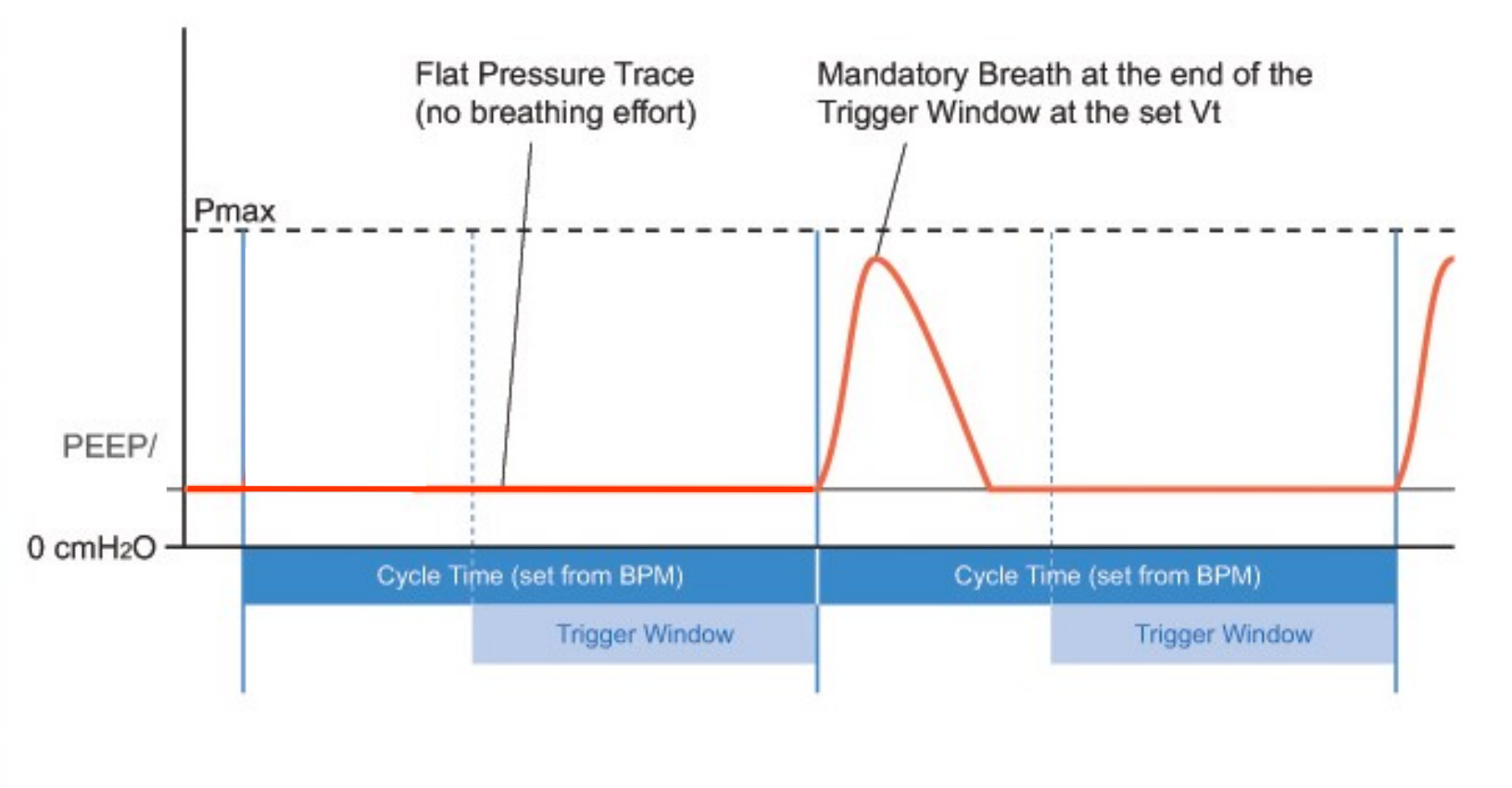

SIMV - default settings

	Adult	Paediatric
Vm	3.6l	1.2l
BPM	6	9
Insp. (Ti)	2	2
Trig.level	1.0 l/min	1.0 l/min

- Vt can be adjusted before SIMV is confirmed

InterMed Penlon

Software 1.87 xx

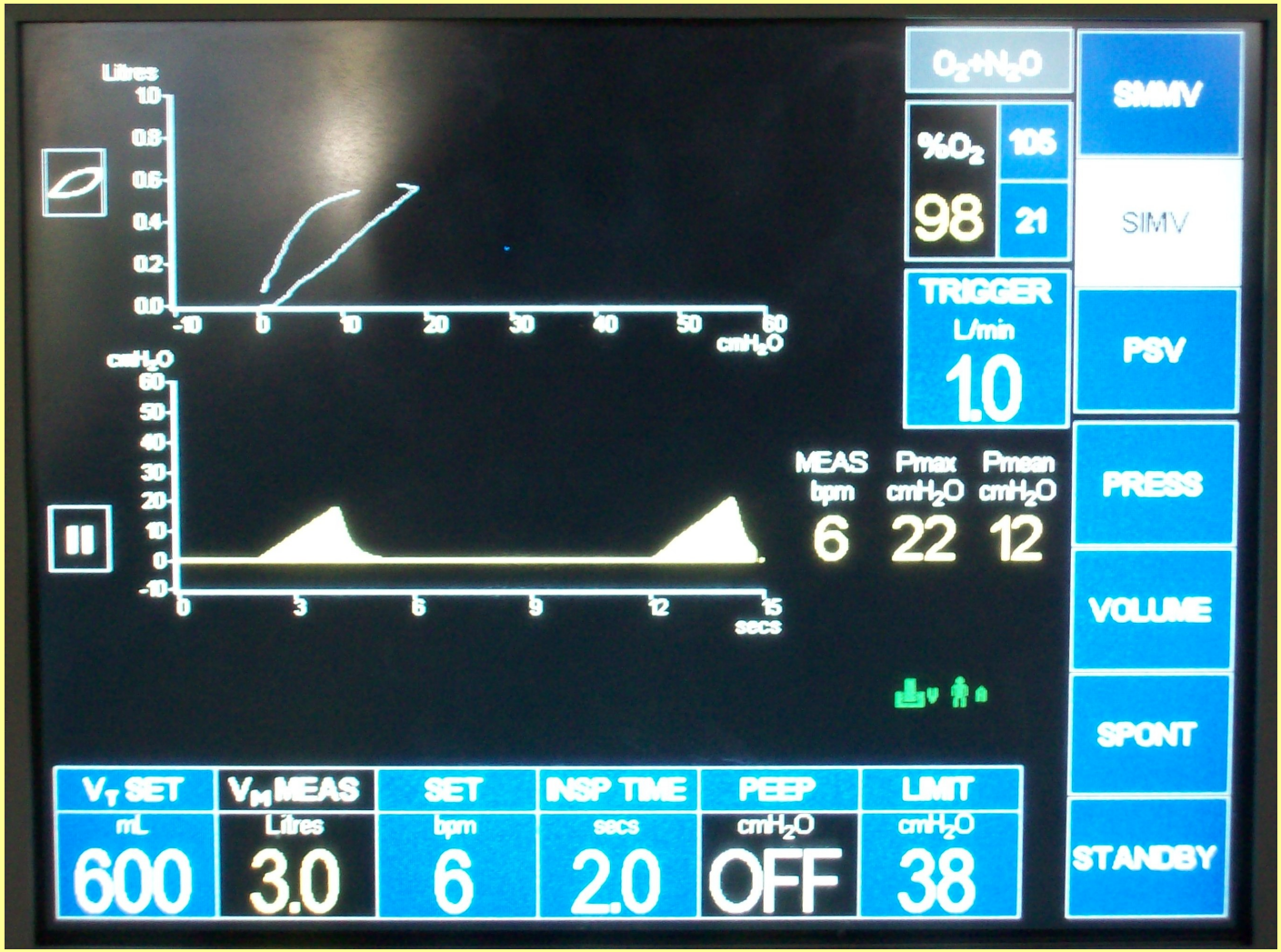

Modes of ventilation

Synchronised Mandatory Minute Ventilation

- Mandatory breaths delivered at wide interval.
  - If the patient's minute volume less than pre-set value.
- Patient breathes spontaneously between mandatory breaths.
  - No mandatory breath if patient minute volume greater than pre set minute volume.
  - Calculated each mandatory breath phase.

Modes of ventilation

Synchronised Mandatory Minute Ventilation

- Mandatory breath is synchronised with a patient breath.
- Mandatory breaths are delivered in presence of apnoea.
- SMMV guarantees a minimum level of minute volume ventilation.

Penlon

SMMV spontaneously breathing patient

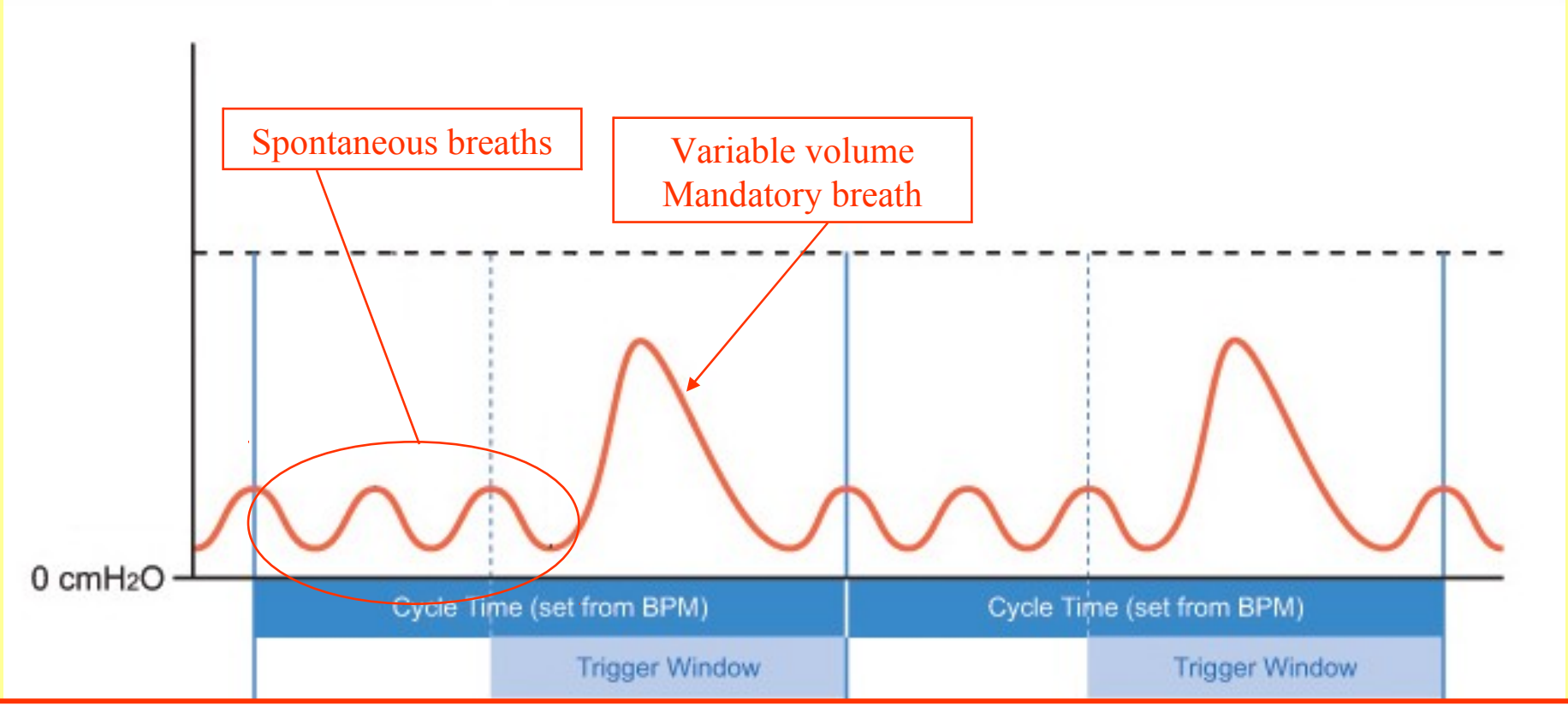

Volume of Mandatory Breath = Vm/BPM – Volume spontaneously breathed during cycle

Penlon

SMMV non-breathing patient

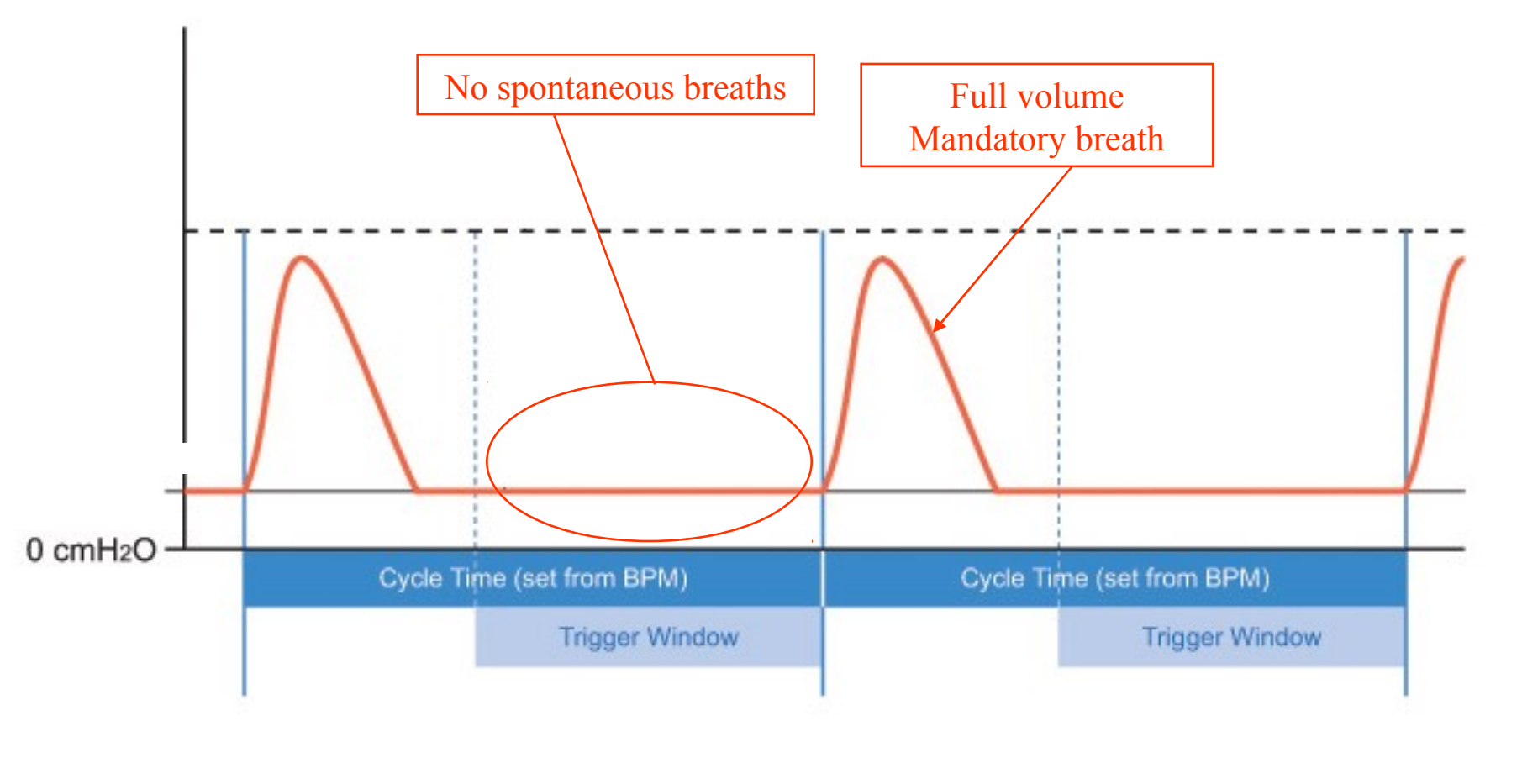

SMMV - default settings

	Adult	Paediatric
Vt	3.6 l	2 l
BPM	6	10
Insp. (Ti)	3.3	1
Trig.level	1.0 l/min	1.0 l/min

- Vt can be adjusted before SMMV is confirmed

InterMed Penlon

Software 1.87 xx

Partnership for Life

Modes of ventilation

Pressure Support Ventilation

- Used to support spontaneously breathing patients.
- Each breath is supported by a synchronized, set inspiratory pressure.
- No patient effort then no support breath.
- No guarantee of minimum level of ventilation.
  - Apnoea alarm is essential.
- The Support Pressure (cmH_2O) is PEEP referenced.

Penlon

PSV - Pressure Support

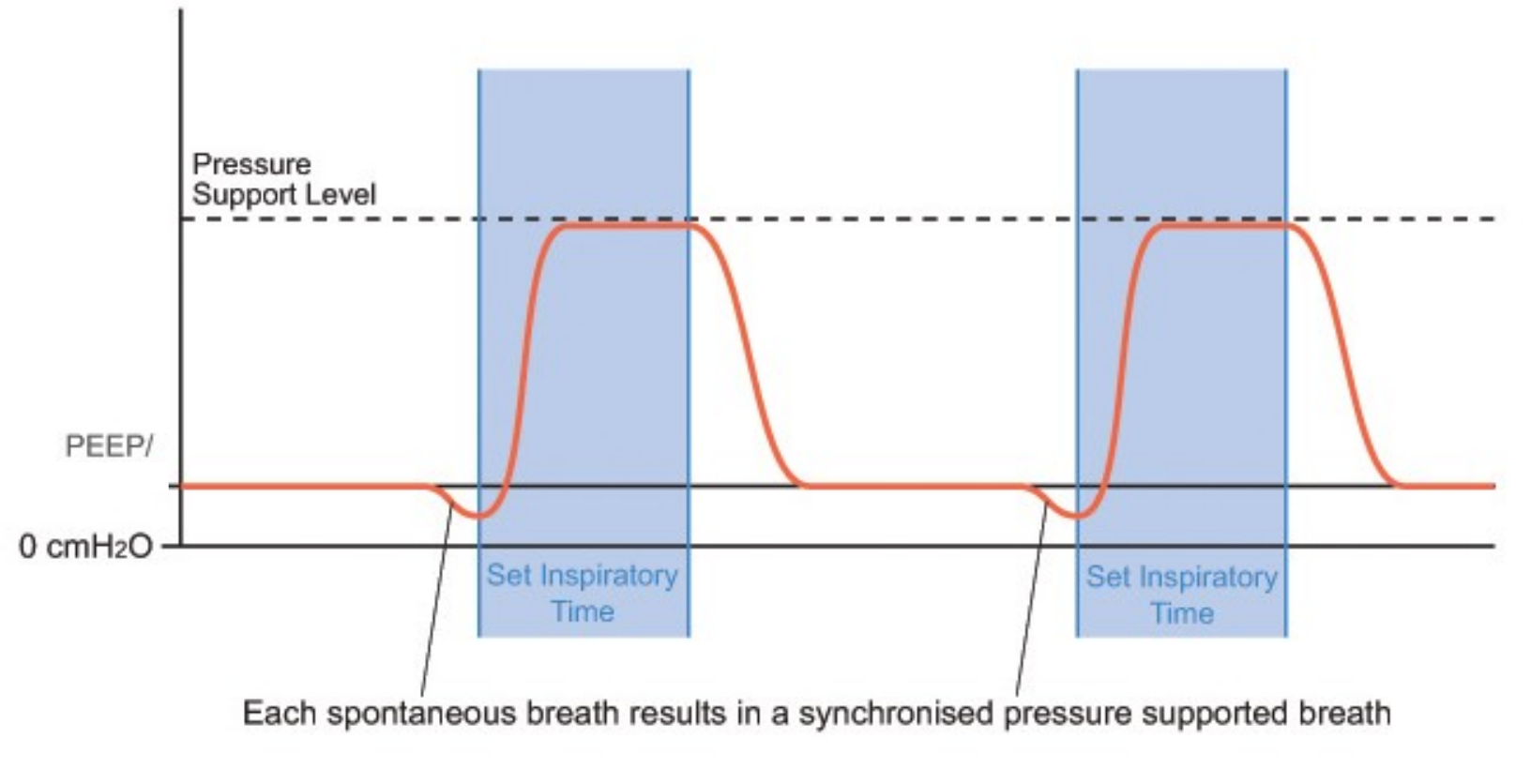

PSV - default settings

	Adult	Paediatric
P. Supp	10 cmH_2O	10 cmH_2O
Insp. (Ti)	2 sec	2 sec
Trig.level	1.0 l/min	1.0 l/min

- Support Pressure can be adjusted before PSV is confirmed.

InterMed Penlon

Software 1.87 xx

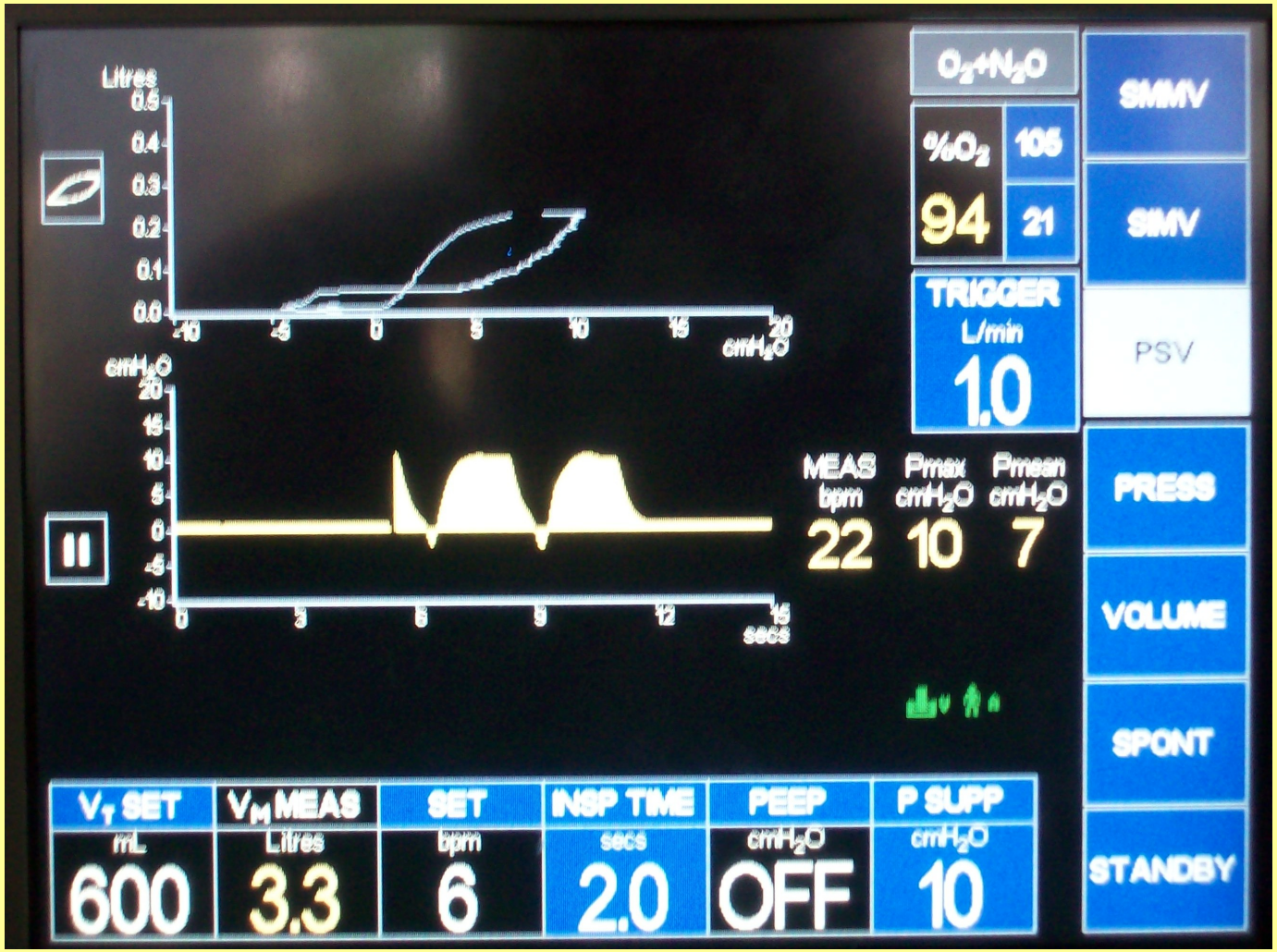

Partnership for Life

Additional functions

Electronic PEEP

PEEP = **P**ositive **E**nd of **E**xpiratory **P**ressure

- AV-S uses an electronic integrated PEEP system.
- Controlled and regulated using secondary pressure on exhaust diaphragm.
  - Allows flow from the bellows circuit to limit pressure.
  - Delivers a limited flow into the bellows drive circuit to maintain pressure.

Additional functions

Electronic PEEP cont':

- Variable from 4-20 cmH_2O in increments of 1 cmH_2O
  - In Pressure (and volume) mode 10 cmH_2O differential is maintained
- Clear "OFF" indication when not in use
- Switch off the ventilator, and PEEP is switched off
- PEEP removed during 'Spont' mode to minimise patient's work of breathing.

Penlon

Integration

- Integrated with PrimaSP / PrimaSP2 anaesthesia machine.
- Ventilator can be switched on/off manually or via Prima SP/SP2 interface.
- Supply gas from auxiliary outlets.

InterMed Penlon

Integration

- Integrated with A200SP / A100SP absorbers.
- All leads located at rear.
  - Spirometry measurement
  - Bag/Vent switch position
  - Inspired oxygen monitor
  - Airway pressure monitor

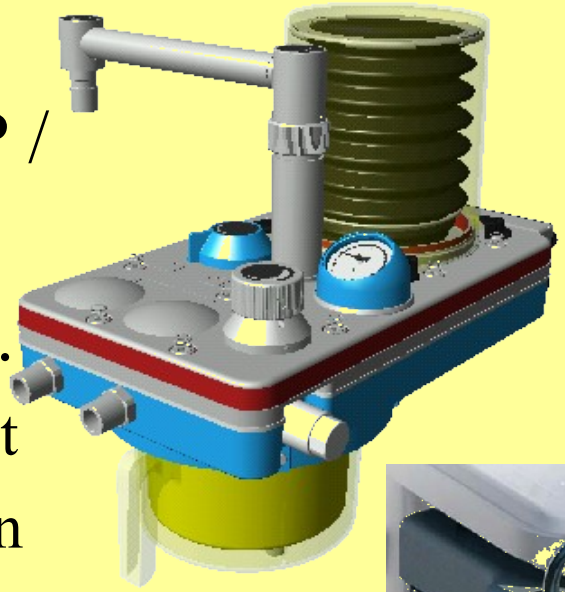

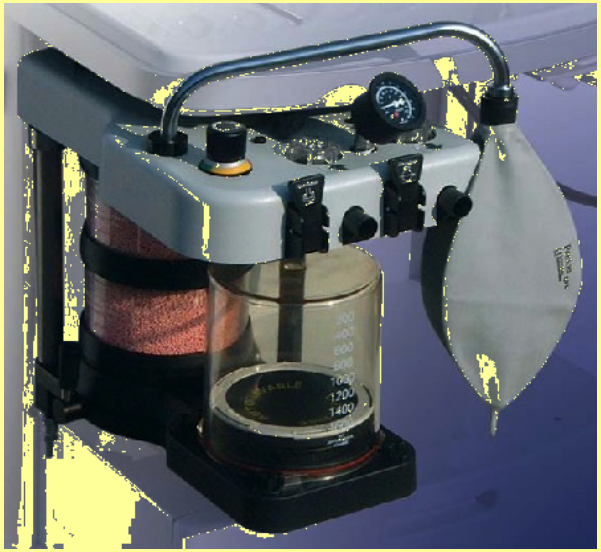

InterMed Penlon

Rear Panel connections

LVDS output for remote mounted screen configurations

Ethernet port allows data to be viewed by remote terminal

Spirometry and Switching interface for absorber and anaesthesia machine

USB is used for software updates and for information downloading

Removable Patient block Autoclavable as one-piece unit

Serial and analogue data outputs

Penlon

1.87.xx Display

Airway Pressure Limit

Set Tidal Volume

Tidal Volume measured

Breath Rate

I:E Ratio

PEEP Select

Any Questions?

InterMed Penlon

AV-S Ventilator

Operation

Partnership for Life

Aims and Objectives

- **Aim:**
  - The aim of this module is to familiarise the student with the operation of the AV-S Ventilator
- **Objectives:**
  - By the end of this module the student will be able to:
    - Operate the ventilator in volume and pressure modes
    - Navigate the menus
    - Set alarm limits
    - Recognise alarm conditions

InterMed Penlon

Operation

Yellow indicator is illuminated whenever power is applied to the unit and internal battery is being charged

Green indicator when unit is switched on

Menu key provides access to user and service pages

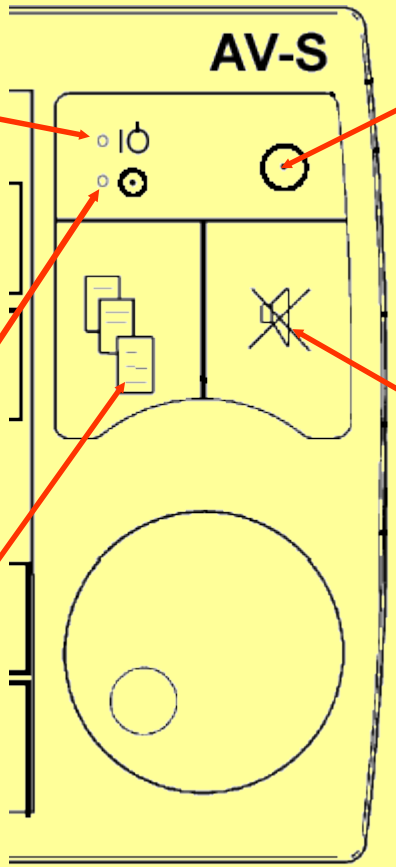

Switch On
Short internal test sequence
Switch Off
Short power down sequence with audible tones

120 seconds Alarm silence for most alarms
Some alarms 30 seconds
- High airway pressure
- Low Drive Gas pressure

Some alarms not mutable
- Ventilator Inoperative
- Low supply pressure
- Power About to Fail

Penlon

Operation

- Check power connected **1.**
- Press and hold On/Off switc **2.**
- Ensure green LED illuminates **3.**
- Ensure audible signal sounds **4.**
- Check default screen displayed.

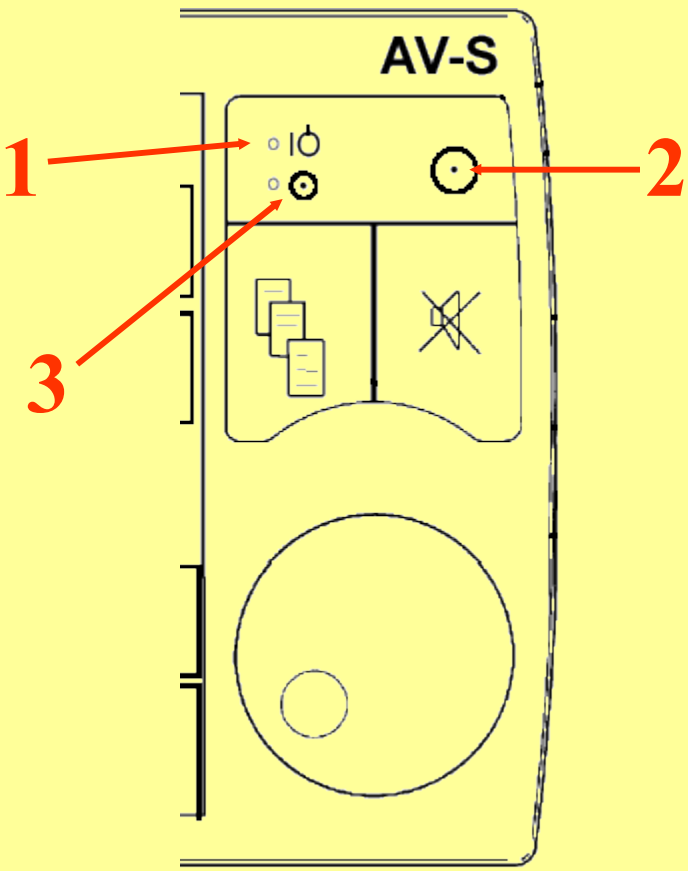

Penlon

Start up screen 1.87.xx

- Select desired mode:
  - Site.
  - Adult.
  - Paediatric.

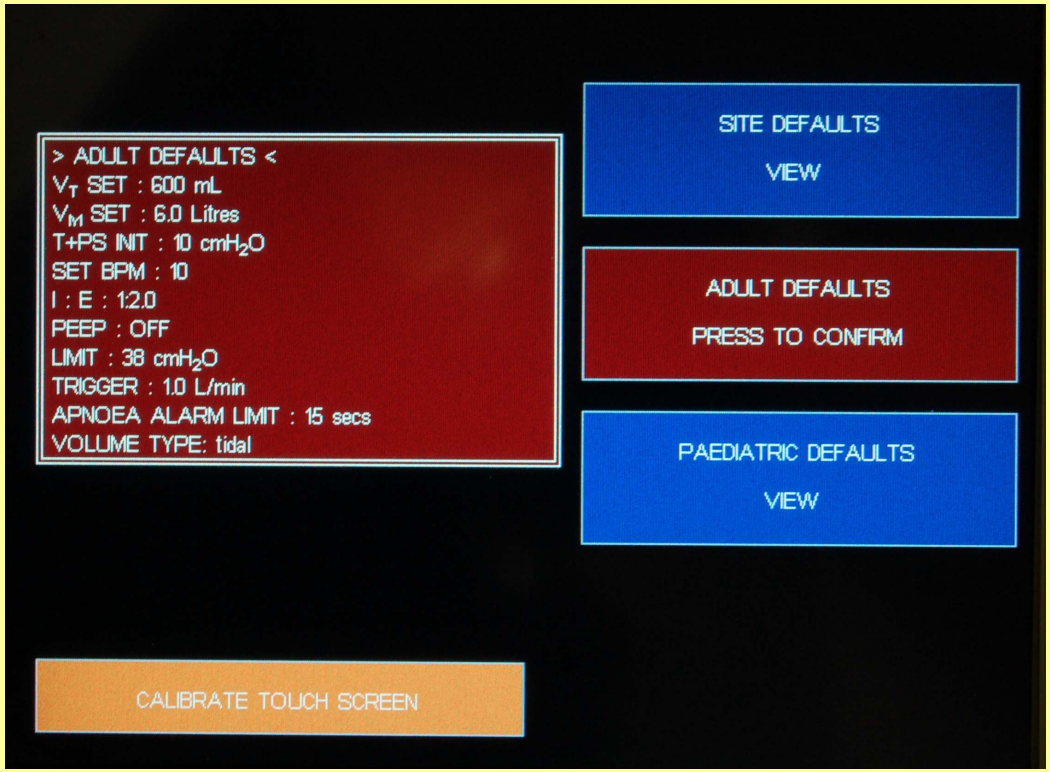

InterMed Penlon

Operation

- Adjust parameters by:
  - Selecting parameter with rotary control dial or,
  - Touching screen parameter key.
- Adjust value with rotary control dial.
- Confirm by:
  - Pressing control dial or,
  - Double touching parameter key.

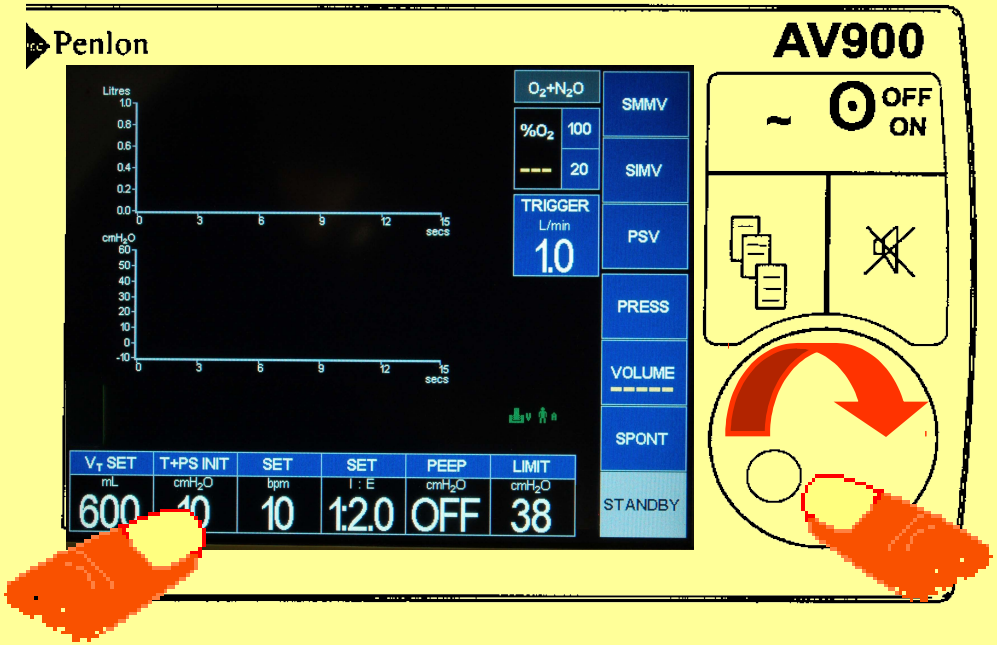

Penlon

Operation

Standby mode:

- Parameters can be pre-set.
- Alarms are active:
  - High airway pressure ('P Limit' setting).
  - High/Low inspired O_2.
  - Negative pressure (-20 cmH_2O).
  - Incorrect Rate/Ratio.
  - High Continuous Pressure (30 cmH_2O).

Operation

Standby mode:

- Gas mix selection key **1**.
- Measured FiO_2 with upper and lower alarm limits displayed **2**.
  - Touch the on-screen parameter key to display O_2 menu.
  - Adjust values with rotary control dial and touch to confirm new setting.

Operation

Mode selection:

- After selection each mode must be confirmed by touching again.
- Changing to Pressure Mode.
  - ‘Target’ can be pre-adjusted.
- Changing to Volume mode.
  - ‘Tidal Volume’ can be pre-adjusted.
- Other parameter are pre-set:
  - Rate.
  - I:E.
  - PEEP.
  - P Limit (Vol. mode).

Operation

Mode specific features:

- Mode selections enable additional features.
- Pressure Mode.
  - Changes ‘P Limit’ to ‘P Target’.
- Volume mode (Menu Functions).
  - Sigh function.
    - Ratio adjustable to 1, 2, 3, or 4 sigh breaths in 50.
    - 25% Inspiratory pause.
- Spontaneous mode.
  - Special functions SIMV; SMMV; PSV.

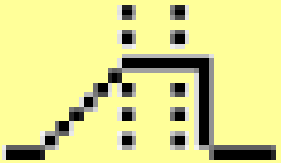

Penlon

Operation

Special Support modes:

- Support modes are pre-selected from the 'Special Modes' menu with ventilator in ‘Standby’.
  - SIMV; SMMV; PSV.
- Absorber must be switched from ‘Bag’ to ‘Vent’ position.
  - Screen message requests confirmation if no absorber switch detected.

Penlon

Operation

User Controls:

- Previously used mode is underlined **1**.
- T+PS INIT can be pre-set **2**.
- If user switches from Press' Vent to Vol' Vent, the pressure limit, **3**, is automatically set to 5 cm H_2O above the existing press' ventilation target pressure.

Operation

User controls:

- Trigger setting defaults to 1.0 litres/min.
  - Adjustable between 0.7 and 4.0 litres/min.

Operation

Waveforms:

- Default waveform is Pressure v Time.
- Second waveform can be displayed.
  - Volume vs Time.
  - Volume vs Pressure (compliance loop).
    - First loop can be frozen.
    - Subsequent loops overlaid.
- Select using menu control or touch screen.

InterMed Penlon

Operation

Partnership for Life

Penlon

Operation

Changing scale:

- ‘Plimit’ value changes Y axis.
  - -10 to 40,60,80cmH_2O.
    - In Vol v Time mode ‘Vt’ value changes Y axis (0 to 0.5,1,2 ltr).
- ‘Rate’ value changes X axis.
  - 0 to 15, 5, 3 sec.

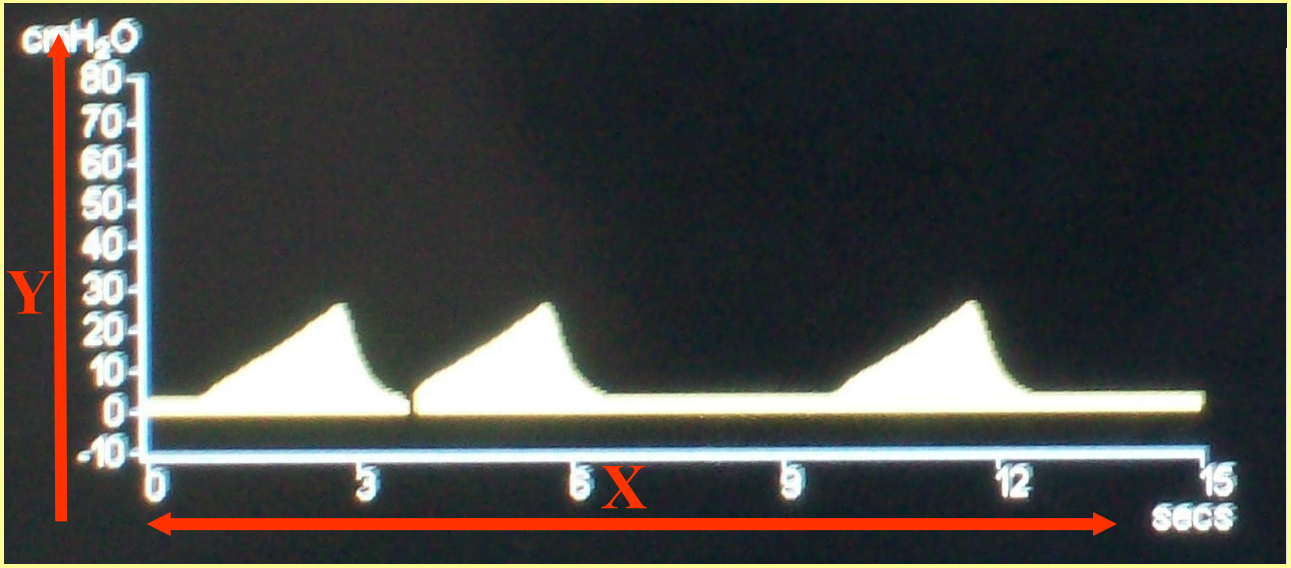

InterMed Penlon

Operation

Changing scale:

- In Vol' vs Pres mode 'Plimit' value changes X axis (-10 to,60,80cmH_2O).

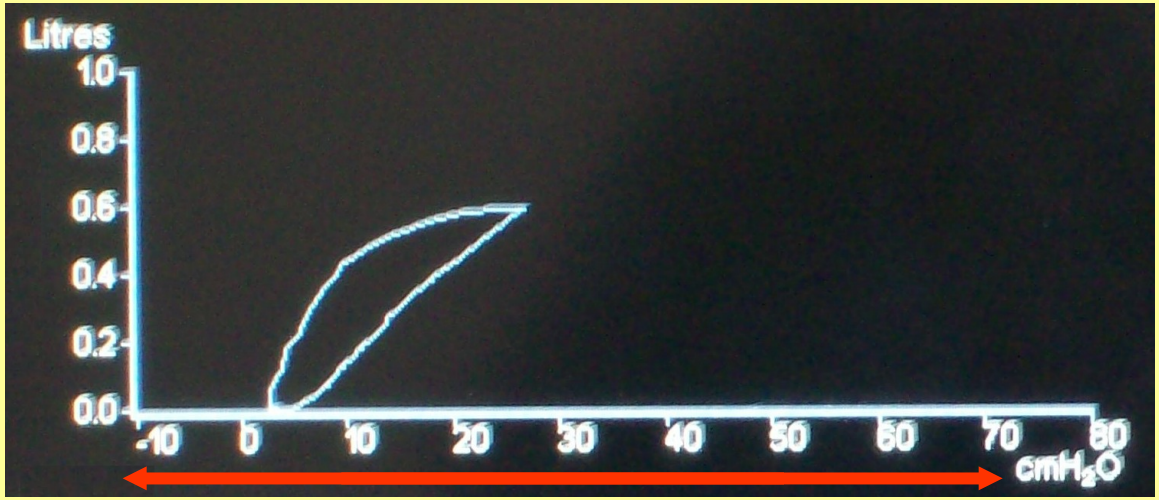

Operation

On-screen settings:

- Tidal volume, Rate, I:E ratio, PEEP and Plimit settings are all available on the stand-by screen and can be pre-set by the user.

InterMed Penlon

Operation

Setting adjustment:

- Tidal volume, Rate and I:E ratio settings are all limited by a maximum and minimum inspiratory flow.
  - 2-75 Litres/min.

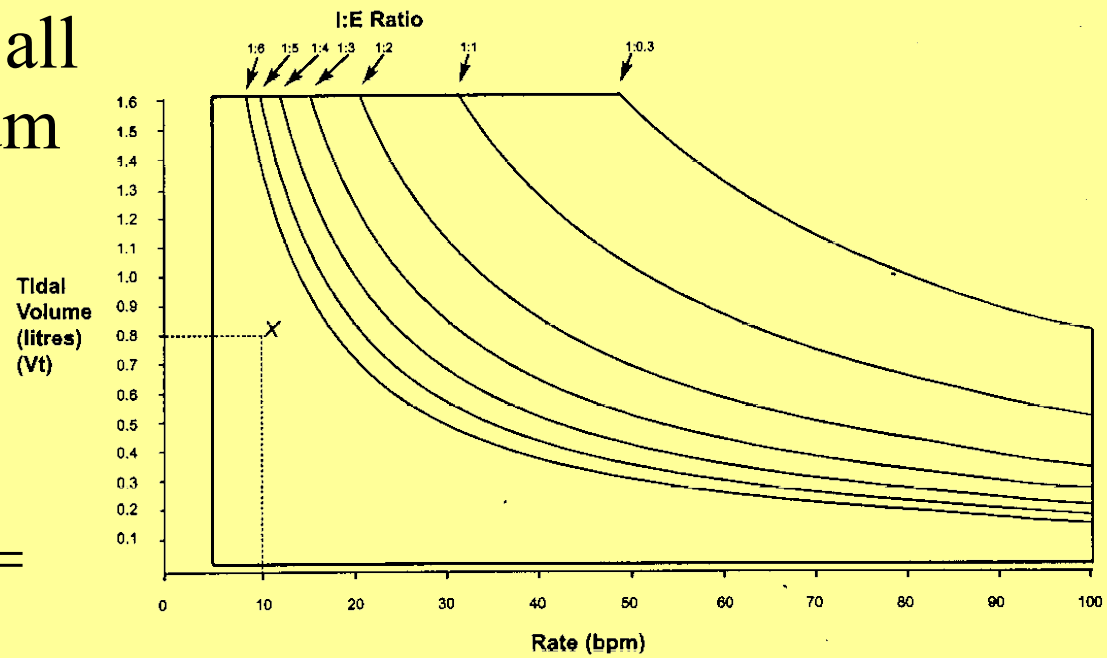

- Vt x BPM x (I + E) = Flow rate (L/pm).

Penlon

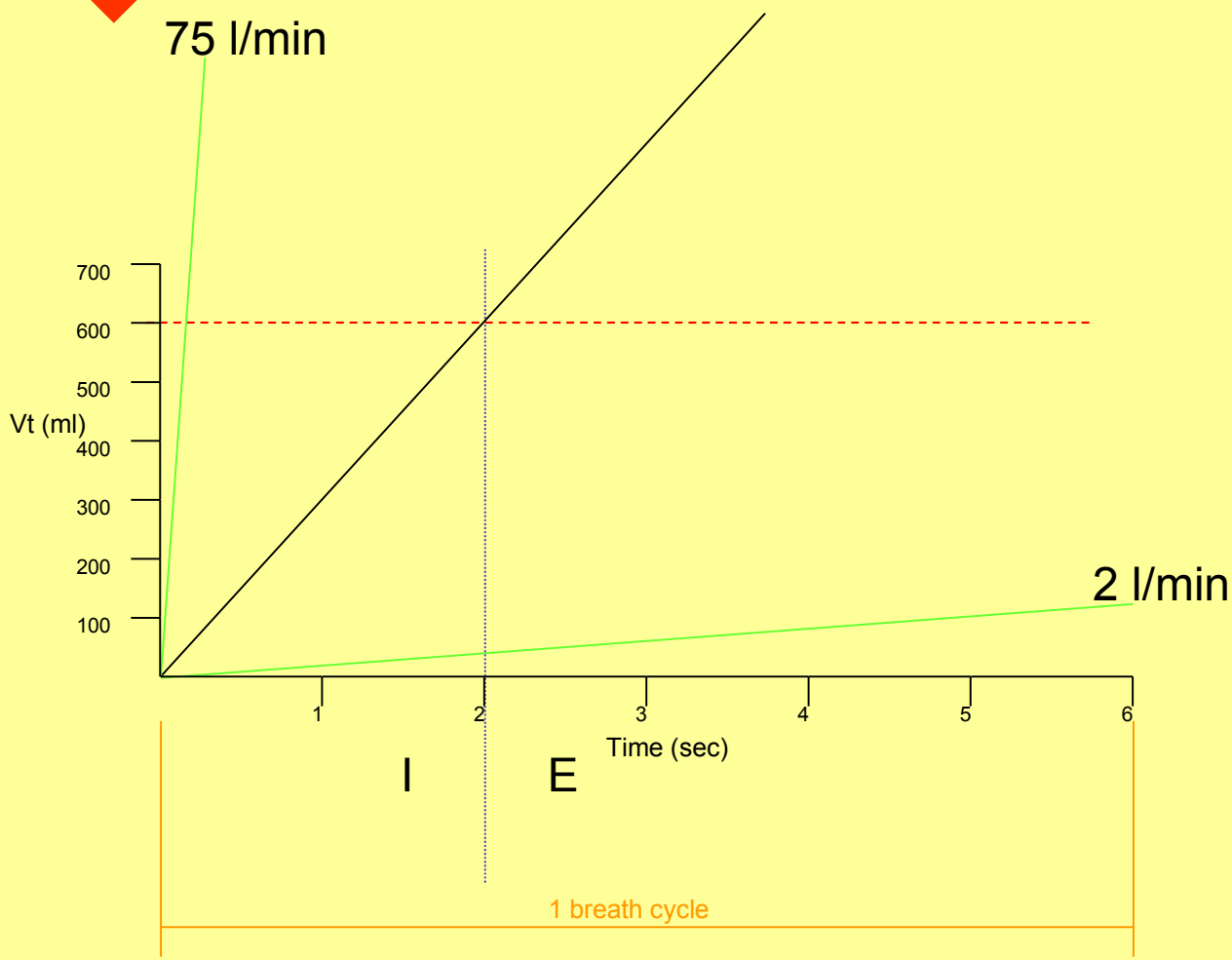

Breath rate of 10 bpm gives a cycle time of 6 seconds

I:E ratio of 1:2 gives an inspiratory time of 2 seconds

With a tidal volume of 600 ml and 2 seconds to deliver it the flow rate is 18 l/min

Changing the Rate; I:E; or Volume will change the inspiratory flow rate

Maximum Flow rate = 75 l/min **Minimum Flow rate = 2 l/min**

Operation

Additional features:

- Absorber connected indicator.
- Adult mode indicator (teddy bear symbol used for paediatric mode).

Operation

Using the menus:

- Menus can be opened by pressing the Menus Select soft-key located on the front of the ventilator, or by touching the relevant area of the touch-screen.
- Use control dial to select item.
- Press control dial to confirm selection.

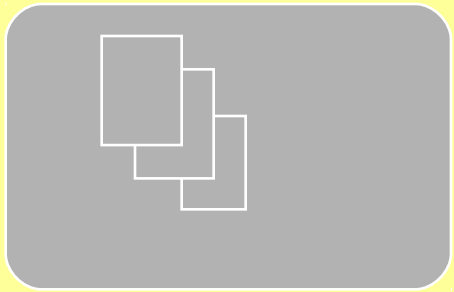

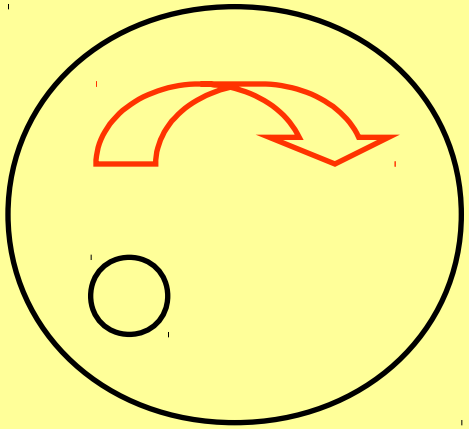

Operation

Main menu:

- Available from stand-by mode.
- Not all subsequent menus are available for alteration by the user.
- To access engineers menu an access code is required.

EXIT MENUS
O2 MONITOR & SPIROMETRY
LEAK TEST MENU
FRESH GAS COMPENSATION: ON
SPECIAL MODES
WAVEFORM
ALARM SETTINGS
GAS MIXTURE: O2+AIR
SERVICE MENU

Operation

O_2 Monitor & Spirometry menu:

- O_2 monitor can be switched On or Off.
- Allows calibration of O_2 cell.
  - 100% (recommended).
  - 21%.
- Set O_2 alarms.
  - High 19 – 105%.
  - Low 18 – 99%.

ESCAPE FROM MENU
> O_2 MONITOR: ON
CALIBRATION: 100%
HIGH ALARM SET: 105
LOW ALARM SET: 18
SPIROMETER: ON
CAL SPIRO: 0 L/min

Penlon

Operation

O_2 Monitor & Spirometry menu:

- Spirometry function can be switched On or Off.
- Allows calibration of Spirometry transducers.
  - Users - daily zero cal.

ESCAPE FROM MENU
O_2 MONITOR: ON
CALIBRATION 100%
HGH ALARM SET: 105
LOW ALARM SET: 18
> SPIROMETER: ON
CAL SPIRO: O L/min

Operation

Leak Test menu:

- Checks system for leaks.
  - Pressurises system to 30 cmH_2O.
  - Holds pressure for 25 seconds.
    - Excellent under 50 ml/min.
    - Good between 50 and 149 ml/min.
    - Poor between 150 and 349 ml/min.
    - Bad 350 ml/min or more.

ESCAPE FROM MENU
> START/STOP LEAK TEST
LEAK TEST STATUS: Excellent
LEAK LEVEL: 39 ml/min
BSYS COM: 7.0 ml/cmH_2O

Operation

Leak test menu cont':

- Measures Breathing system compliance.
  - Typical 5-7 ml/cmH_2O.
  - Max. 18 ml/cmH_2O.
  - Used in compliance compensation mode.

```
  ESCAPE FROM MENU
> START/STOP LEAK TEST
  LEAK TEST STATUS: Excellent
  LEAK LEVEL: 39 ml/min
  BSYS COM: 7.0 ml/cmH2O
```

Operation

Fresh Gas Compensation menu:

- Ensures correct volume delivery with varying fresh gas flows.
  - Automatically OFF if Spirometry is switched off.
  - If ‘Fresh Gas Comp.’ is Off ‘Compliance Comp’ is automatically ON (if turned on in the Penlon Options menu.

> FRESH GAS COMPENSATION: ON

Operation

Fresh Gas Compensation menu cont':

- **Compliance compensation:**
  - Must be enabled in 'Penlon Options' menu.
  - Delivered volume compensated for system compliance losses.
  - Requires accurate 'BSYS Comp' value.
  - Does not compensate for Fresh Gas Flow.

Penlon

Operation

Mode selection menu:

- Support mode selection.
  - SIMV; SMMV; PSV; NONE.
- Trigger level adjustment.
  - 0.7 – 4.0 l/min.
- Sigh Enable switches on or off the sigh function and puts 'SIGH' message on screen.
- Variable Sigh to breath ratio.
  - 1 in up to 100 breaths. An indication icon is shown on screen.
- Variable inspiratory pause.
  - 0 - 60% inspiratory time. An indication icon is shown on screen.

```
>   ESCAPE FROM MENU
    SUPPORT MODE: none
    VOLUME TYPE: TIDAL
    SIGH ENABLE: off
    SIGH TO BREATH: 1:50
    INSP. PAUSE 0%
    APPLY : SITE DEFAULT
```

SIGH

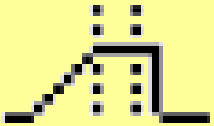

Operation

Waveform menu:

- User can select the required second graphical display.
  - OFF.
  - Volume / Time.
  - Volume / Pressure.

```
  EXIT MENUS
>  SECOND WAVEFORM: off
```

Operation

Alarm settings menu:

- Alarm mode.
  - Default.
    - Uses + 50% of front panel setting.
  - User.
    - Uses menu set values.
- High Tidal Volume.
  - Allows clinician to remove alarm.
  - Auto defaults to ON in standby.

>
ESCAPE FROM MENU
ALARM MODE: default
HIGH TIDAL VOLUME: off
V_M min: 0.3 L (dflt)
V_M max: 0.9 L (dflt)
V_T min: 300 ml (dflt)
V_T max: 900 ml (dflt)
APNOEA ALARM LIMIT: 15 secs
ALARM VOLUME: 50%

Operation

Alarm settings menu cont':

- Alarm limits.
  - V_M min 0.0 – 7.4 ltr.
  - V_M max 0.1 – 7.5 ltr.
  - V_T min 10 – 1600 ml.
  - V_T max 20 – 2400 ml.
- Alarm volume.
  - 50% – 100%.

Penlon

Operation

Gas Mixture selection menu:

- Used for gas density correction to provide accurate spirometry.
  - O_2 + AIR.
  - O_2 + N_2O.
- No individual sub menu.
- If O_2 monitoring is off a 40/60 O_2/other gas mixture is assumed.

> GAS MIXTURE: O2+AIR

Operation

Service menu:

- Language:
  - English.
  - Italian.
  - Turkish.
  - Polish.
  - Spanish.
- Service screens change to that language.

```
  ESCAPE FROM MENU
  LANGUAGE: ENGLISH
> PATIENT LOG MENU
  SITE DEFAULTS
  SERIAL MODE: none
  ABSORBER SWITCH: on
  CLOCK MENU
  UPGRADE MENU
  AMBIENT PRESSURE: 988 mBar
  DISPLAY HISTORY
  SERVICE PIN: 0
  ENGINEER MENU
```

Operation

Service menu cont':

- Patient Log Menu:
  - Provides up to 8 hours of trend information.
- Prints ventilator performance and patient data parameters for up to 8 hours:
  - Enables data logging on or off.
  - Clears all data.
  - Set log time.

```
>  ESCAPE FROM MENU
   PRINT PATIENT DATA
   LOGGING: off
   Log Status : Disabled
   CLEAR LOG DATA
   Logging window: 10 mins
```

Operation

Service menu cont':

- Site Defaults
  - Sets default start up parameters
- Serial Mode
  - Sets output port to a monitor type
- Absorber switch
  - Allows switch detection to be disabled

```
  ESCAPE FROM MENU
  LANGUAGE: ENGLISH
  PATIENT LOG MENU
> SITE DEFAULTS
  SERIAL MODE: none
  ABSORBER SWITCH: on
  CLOCK MENU
  UPGRADE MENU
  AMBIENT PRESSURE: 988 mBar
  DISPLAY HISTORY
  SERVICE PIN: 0
  ENGINEER MENU
```

Operation

Service menu cont':

- Clock menu
  - Date time adjustment
- Upgrade menu
  - Software version
  - Feature enhancement
  - Software upgrades
- Ambient Pressure
  - Displays local pressure

```
  ESCAPE FROM MENU
  LANGUAGE: ENGLISH
  PATIENT LOG MENU
> SITE DEFAULTS
  SERIAL MODE: none
  ABSORBER SWITCH: on
  CLOCK MENU
  UPGRADE MENU
  AMBIENT PRESSURE: 988 mBar
  DISPLAY HISTORY
  SERVICE PIN: 0
  ENGINEER MENU
```

Operation

Site Defaults Menu:

- Saves current values to site defaults.
- View site, adult or paediatric default values.
- Set Tidal or Minute volume default.
- View values…

```
>  ESCAPE FROM MENU
   SAVE TO SITE
   VIEW: SITE DEFAULTS
   VOLUME TYPE: Tidal
   Vt SET: 550ml
   Vm SET: 5.5 litres
   T+PS INIT: 10 cm H2O
   etc
```

InterMed Penlon

Operation

Service menu:

- Display history.
  - Last service date; Run time hours; Valve cycles.
- Service Pin.
  - Code required before access to Engineer menu.
- Engineer menu.
  - Access to Penlon Options and Diagnostic menus.
    - All system voltages; Valve control; Error log.

>

ESCAPE FROM MENU
LANGUAGE: ENGLISH
PATIENT LOG MENU
SERIAL MODE: none
ABSORBER SWITCH: on
CLOCK MENU
UPGRADE MENU
AMBIENT PRESSURE: 988 mBar
DISPLAY HISTORY
SERVICE PIN: 0
ENGINEER MENU

Any Questions?

Workshops

- Complete Operations workshop.
- Complete Calibrations workshop.

InterMed Penlon

AV-S Ventilator

Technical Description

Partnership for Life

Aims and Objectives

- Aim
  - The aim of this module is to explain the electronic and pneumatic principles employed in the AV-S
- Objective
  - By the end of this module the student will be able to
    - Describe the operation of the AV-S pneumatic system
    - Describe the operation of the AV-S electronic system
    - Describe the function of optional devices used with the AV-S

InterMed Penlon

Components

Control module:

- Electrical power supply.
- Inlet Manifold.
- Pneumatic Control Manifold.
- Patient Valve Block.
- Main PCB tray.
- Front panel assembly.

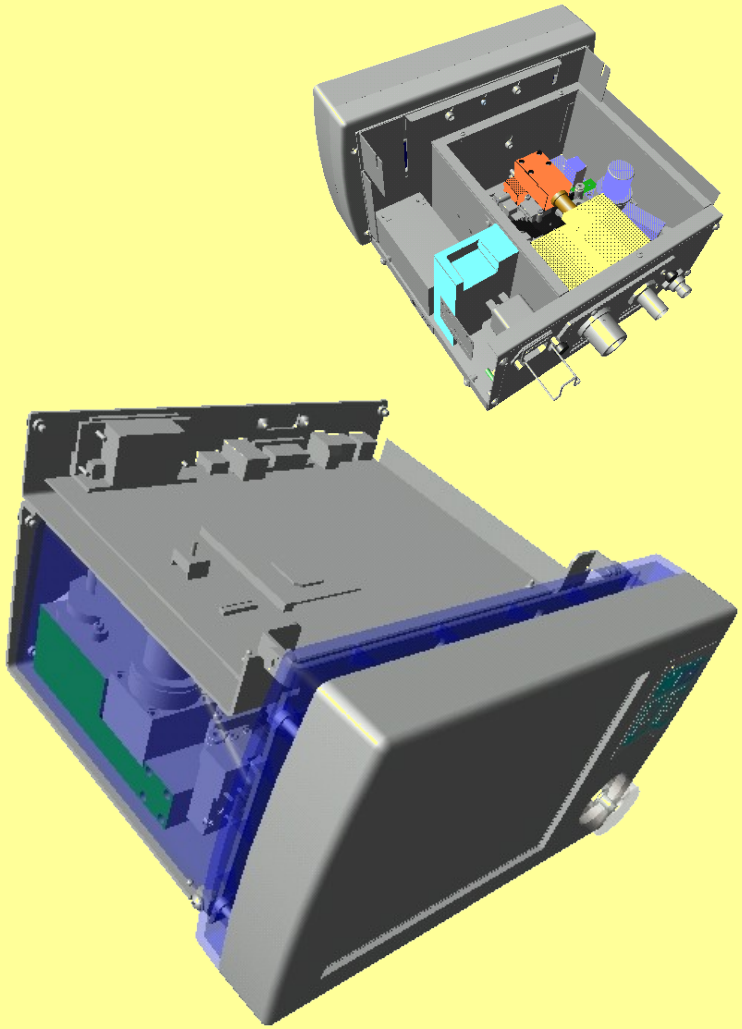

Penlon

Components

Bellows assembly:

- Adult or paediatric bellows.
  - Paediatric adaptor plate.
- Diaphragm valve.

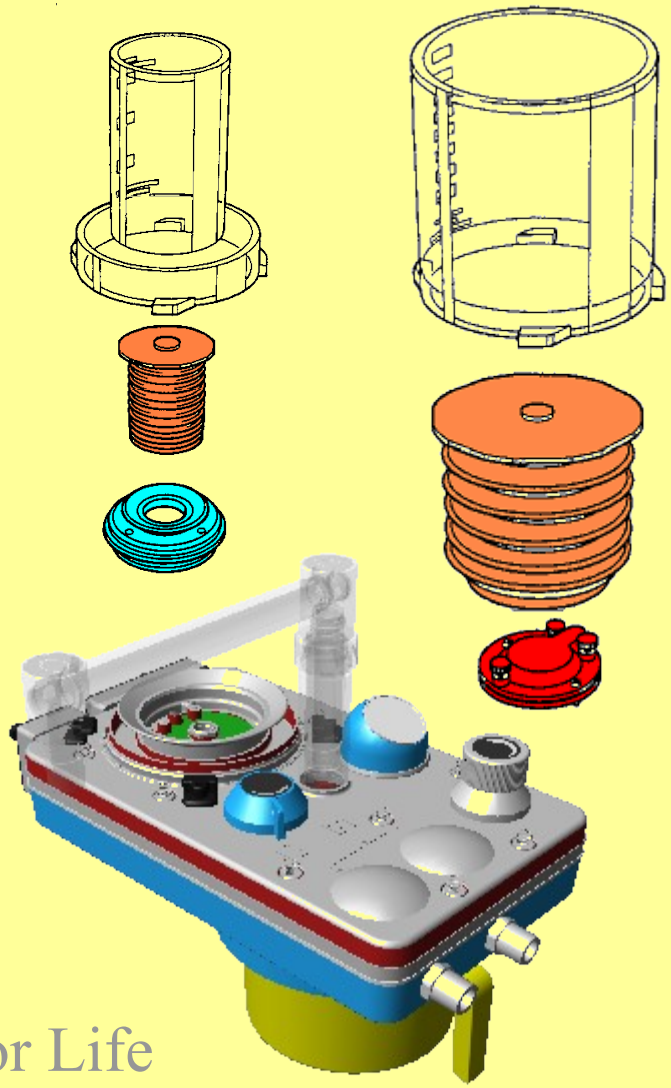

InterMed Penlon

Components

Electrical Box:

- User removable.
- Contains Spirometers and Bag/Vent switch.

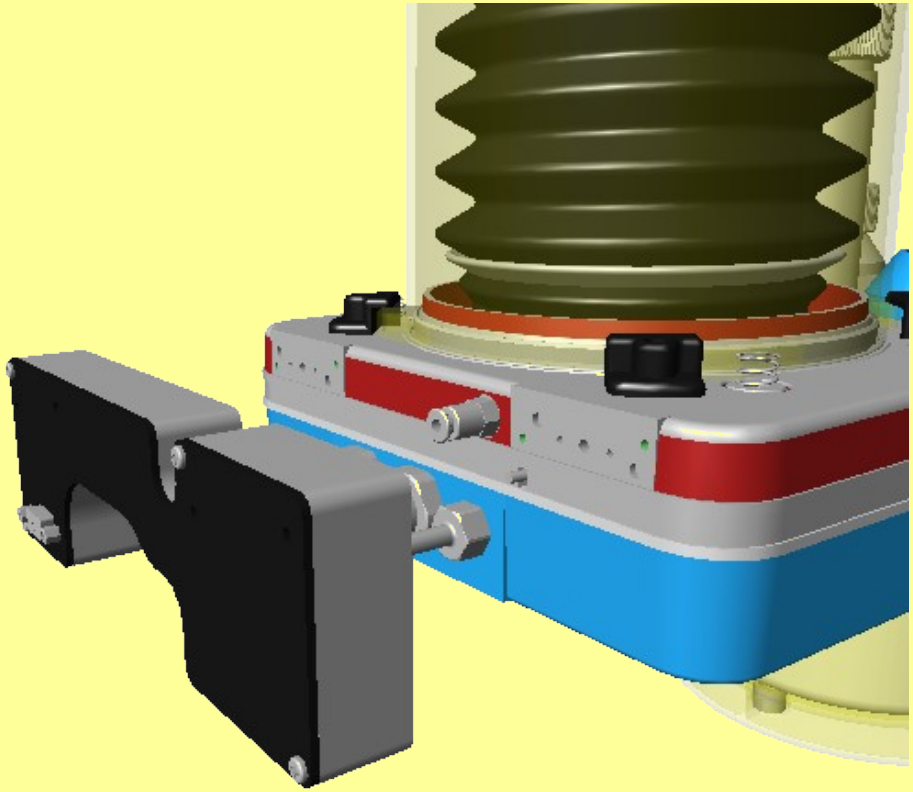

Penlon

Bellows function

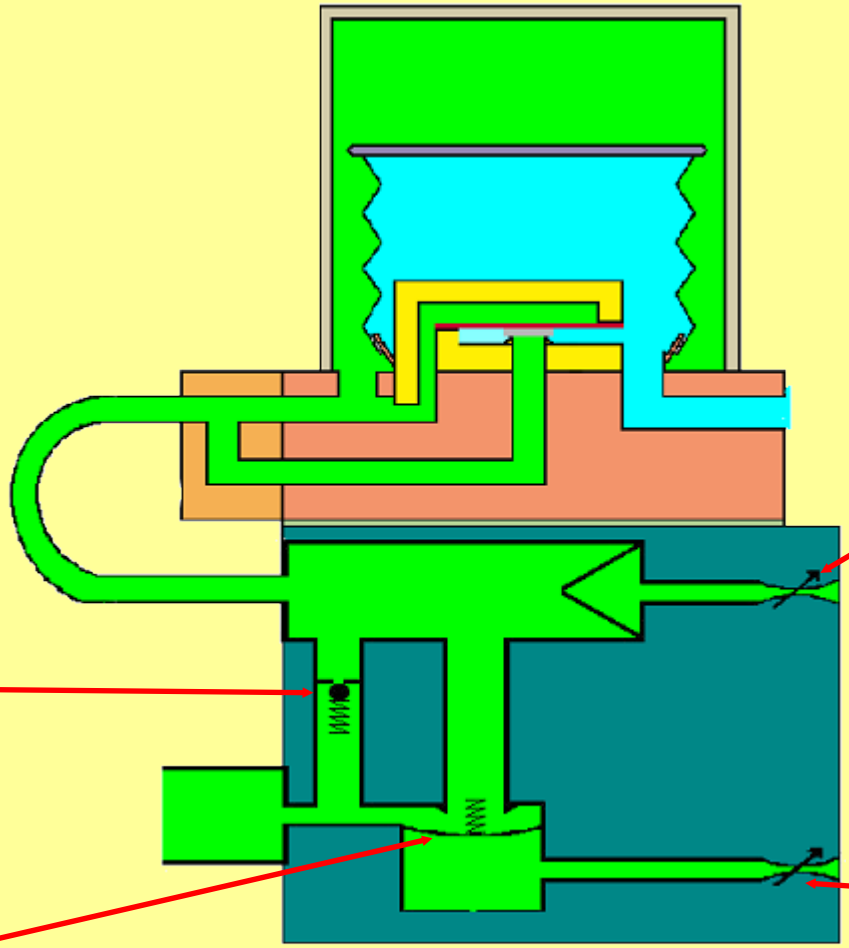

Penlon

Inspiratory phase

The diaphragm is held closed, the bellows is driven down and gas is delivered to patient circuit

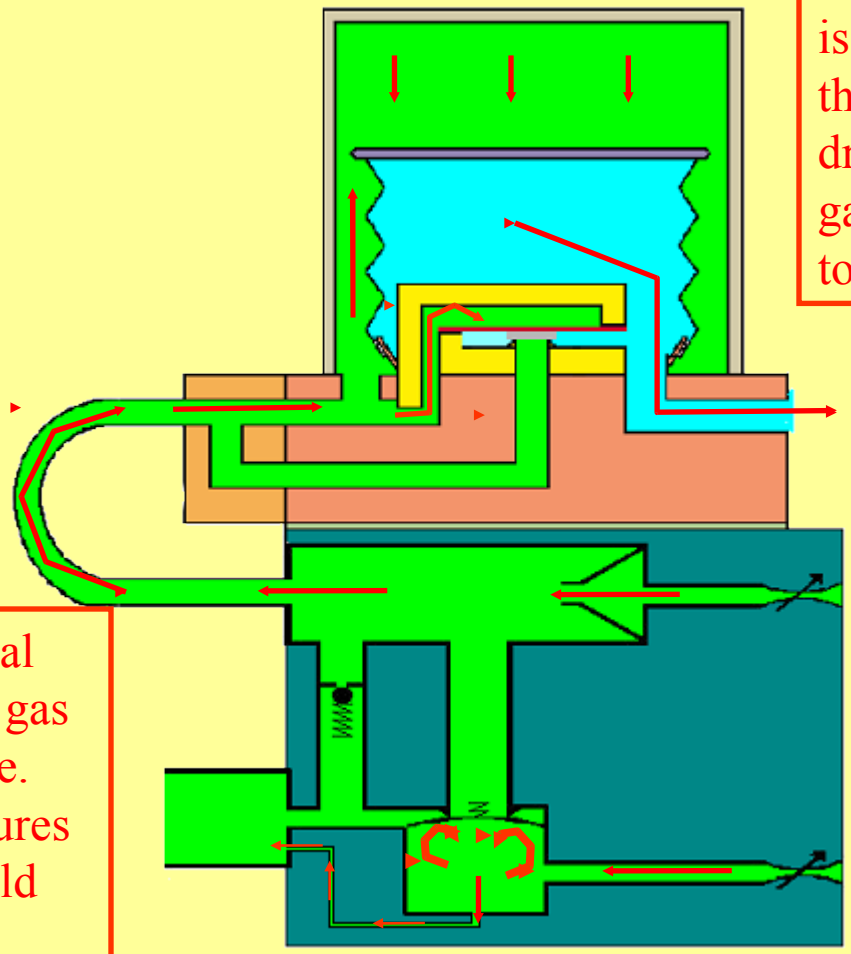

The Drive Gas proportional valve opens and drive gas is delivered to bellows housing.

The Patient proportional valve opens and flows gas through the bleed valve. The back pressure ensures the exhaust valve is held closed.

Penlon

Expiratory phase

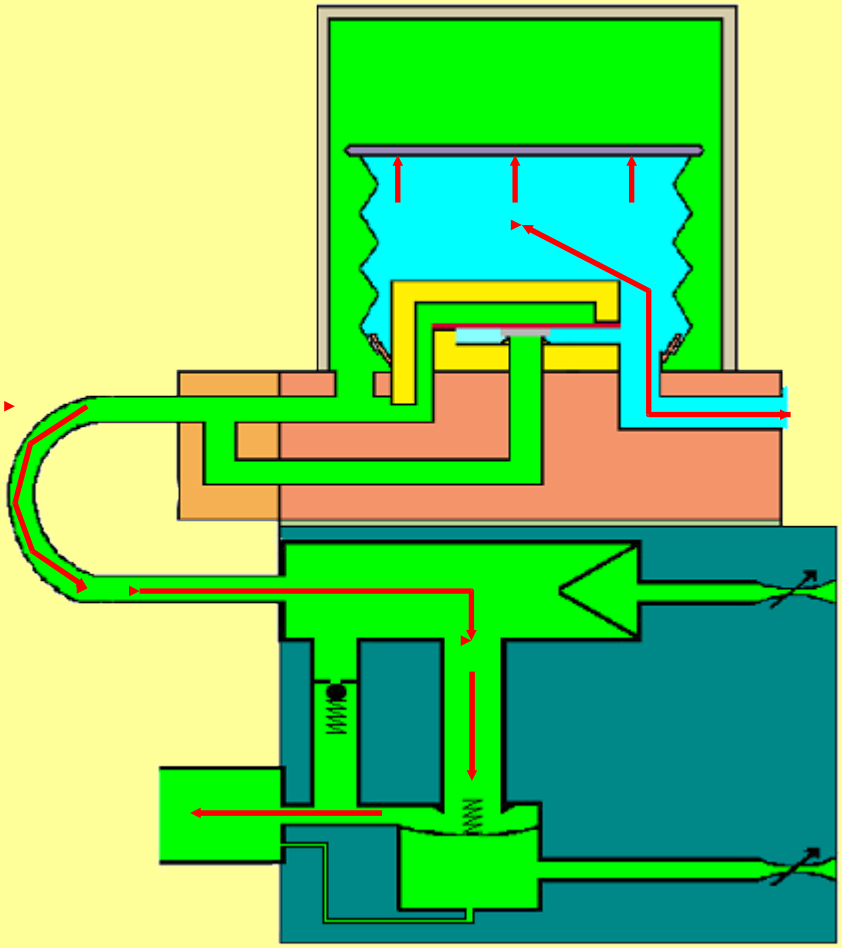

Both the Drive Gas and Patient proportional valves close and exhaust valve opens.

Patient gas returns to bellows.

As bellows lifts redundant drive gas is pushed out through the exhaust valve.

Penlon

Exhalation diaphragm

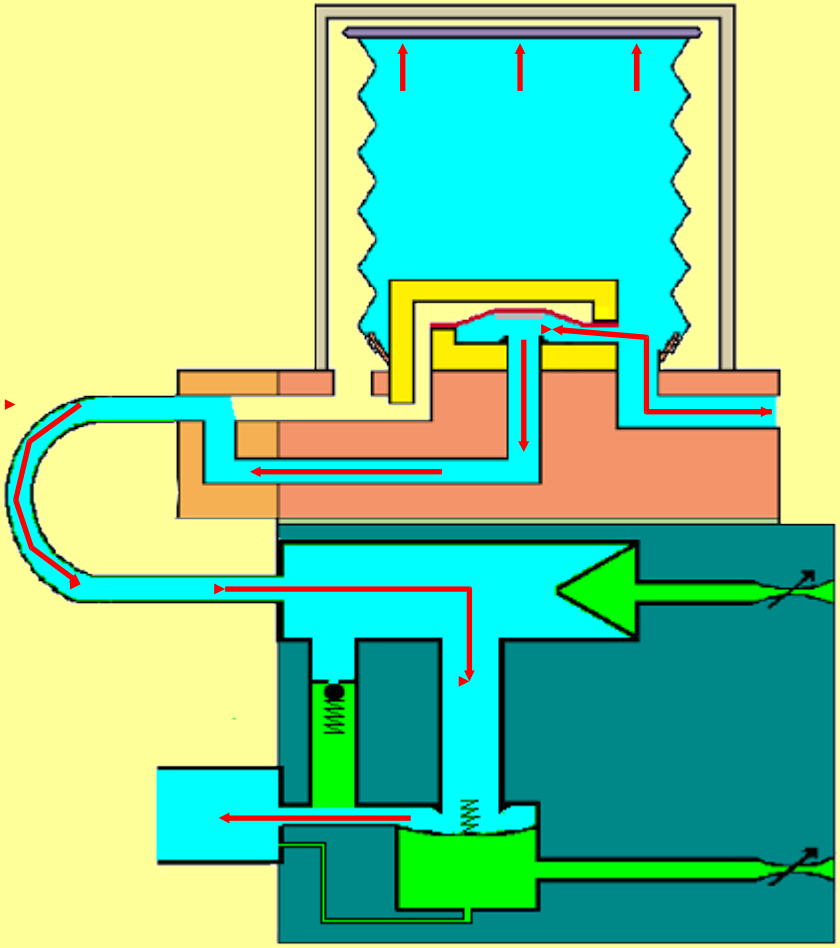

With the bellows at the top of its housing fresh gas continues to flow.

To prevent a high pressure build up the bellows diaphragm valve lifts and allows gas to exit through the exhaust valve.

Penlon

PEEP control

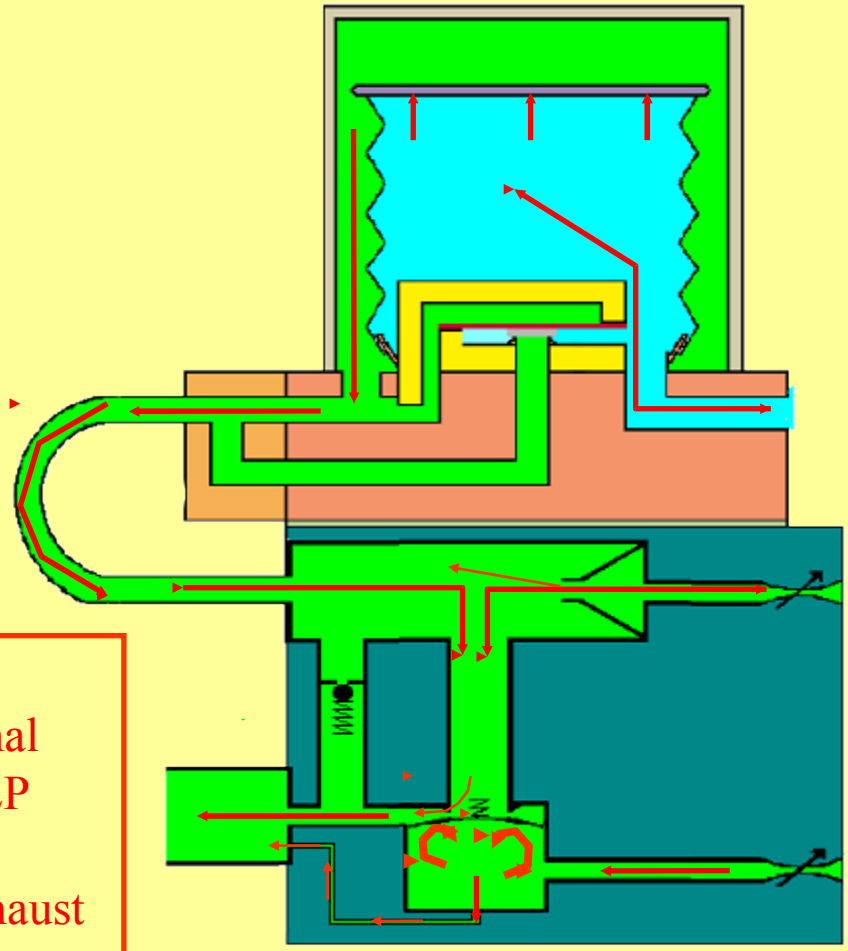

As fresh gas flows in the patient circuit, any pressure increase above PEEP pressure in the bellows will cause gas to bleed past the exhaust valve.

A continuous flow from the Inspiratory proportional valve ensures that any fall in pressure is compensated by driving the bellows as required

During PEEP the Patient Proportional valve applies PEEP pressure plus 20 cmH2O to the exhaust valve.

Penlon

Monitoring devices

- Oxygen monitor:
  - Galvanic cell.
  - Mounted in inspiratory line.
- Spirometry system:
  - Two transducers are used.
    - Inspiratory and expiratory limbs.

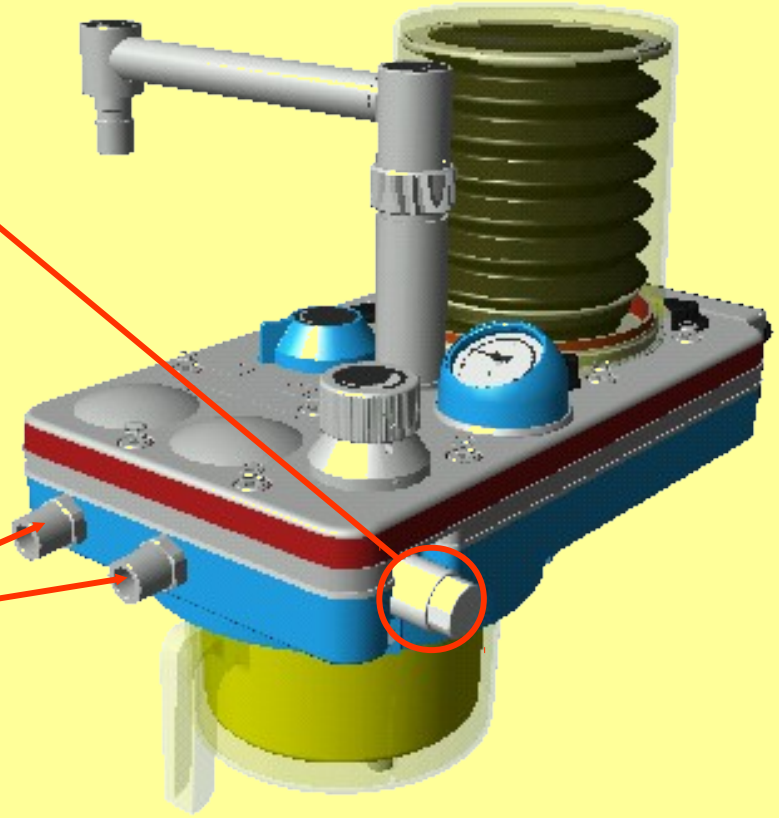

InterMed Penlon

Galvanic Fuel Cell

- Oxygen diffuses through the membrane.
- Oxygen in the electrolyte will cause electrons to flow.
- Current is proportional to the oxygen concentration.

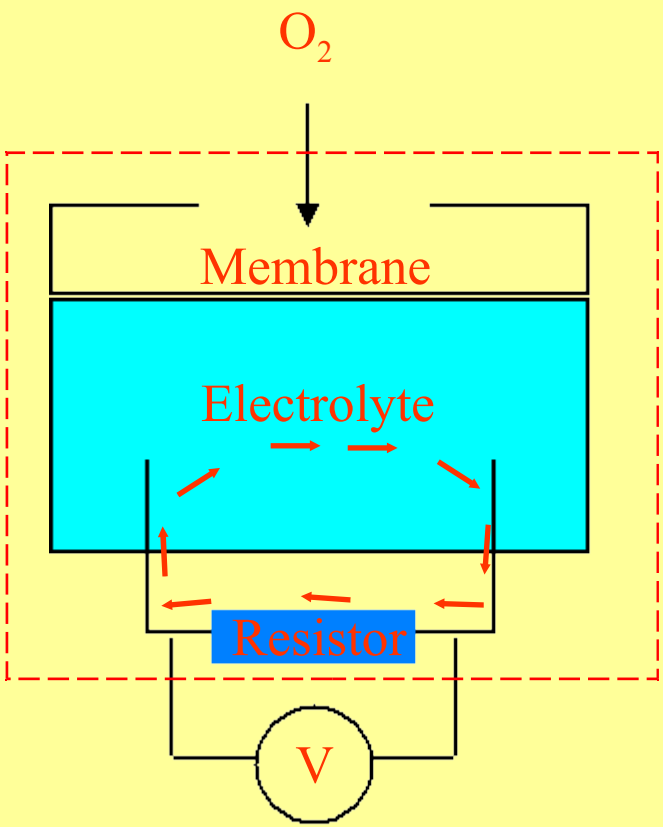

Flow Sensors

- Two electronic flow sensors in absorber electrical box 1.
  - Measures volume delivered to and from the circuit.
  - Inspiratory sensor:
    - Breath detection.
    - Volume waveforms.

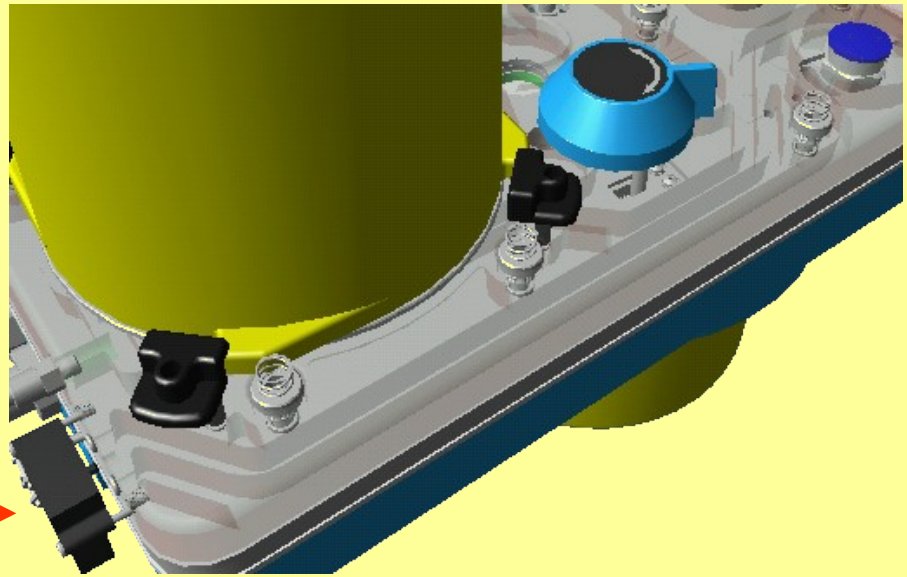

Penlon

Flow Sensor

Cont':

- Expiratory sensor.
- Expired Volume measurement:
  - >300ml ±10%.
  - >100ml <300ml ±20%.
  - <100ml ±50%.
- Lead connects to 'D' connector on rear of control module.

InterMed Penlon

Laminar flow sensor

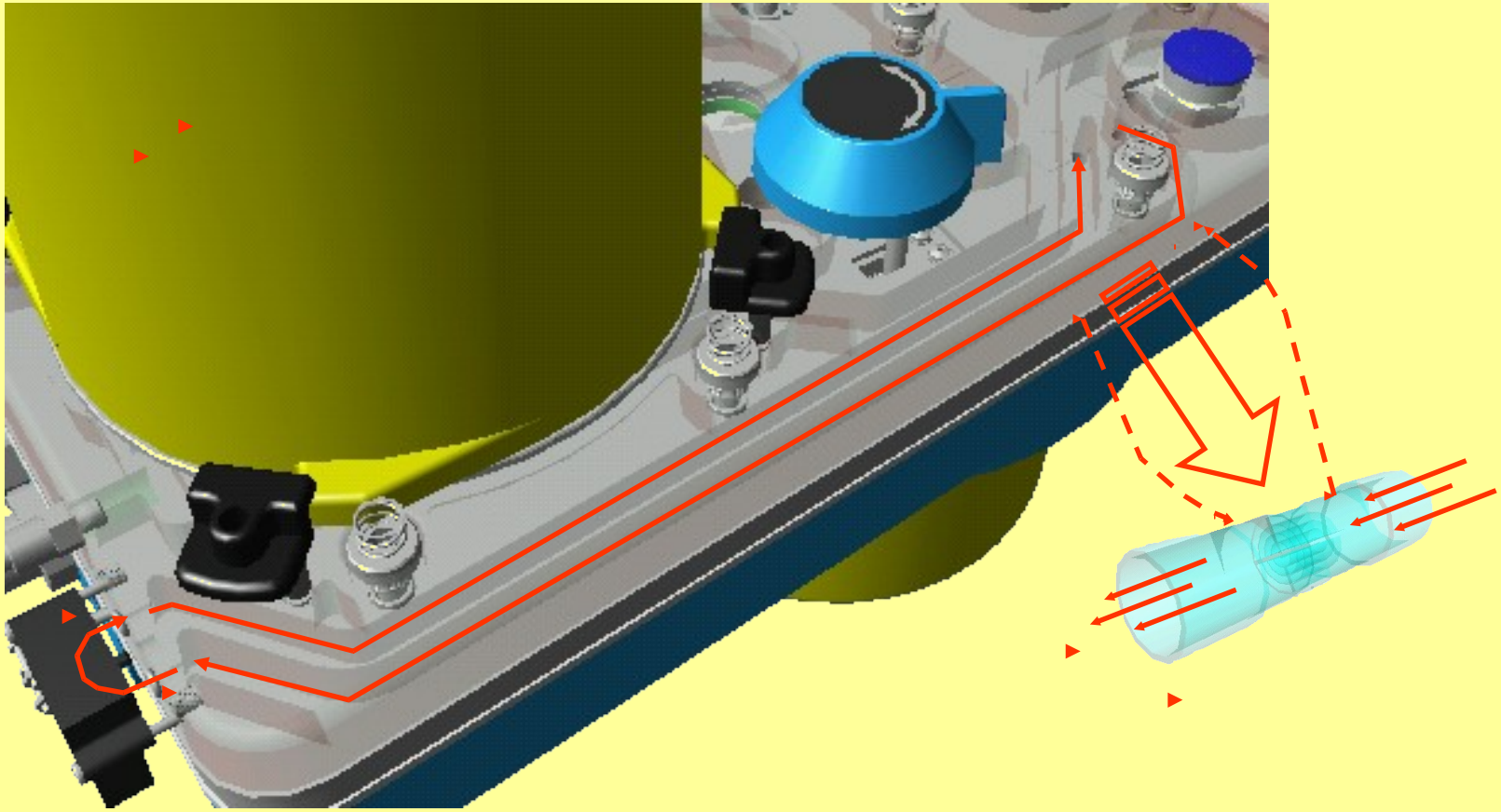

Penlon

Spirometry measurement

- Mass flow sensor:
  - The gas flow cooling effect is a function of velocity and density.
  - Current is passed through a substrate, heating it to a certain temperature. As gas flows across the surface, the substrate cools.
  - The microprocessor adjusts the current as necessary to maintain the substrate temperature.
  - This current is proportional to the flow of the gas.

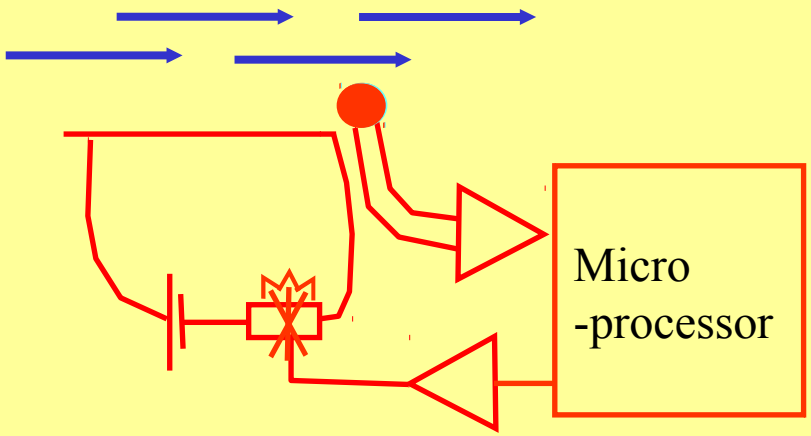

Volume measurement

- Flow rates are sampled every 10 ms.
- Raw volume data is calculated.
- Gas mixture correction made using O_2 measurement.
- Expired tidal volume is displayed.
  - In normal alarm mode, if less or more than 50% of set volume, Low or High Volume alarm is given.

Volume measurement cont’

- With Fresh Gas Compensation 'ON' fresh gas flow is calculated and the next breath is adjusted as necessary.
- In ‘Spont’ mode Inspiratory and Expiratory phases are detected by respective flow being greater than the other.
  - End of Expiratory phase detected when Inspiratory and Expiratory flows are equal.

Penlon

Pneumatic Block Diagram

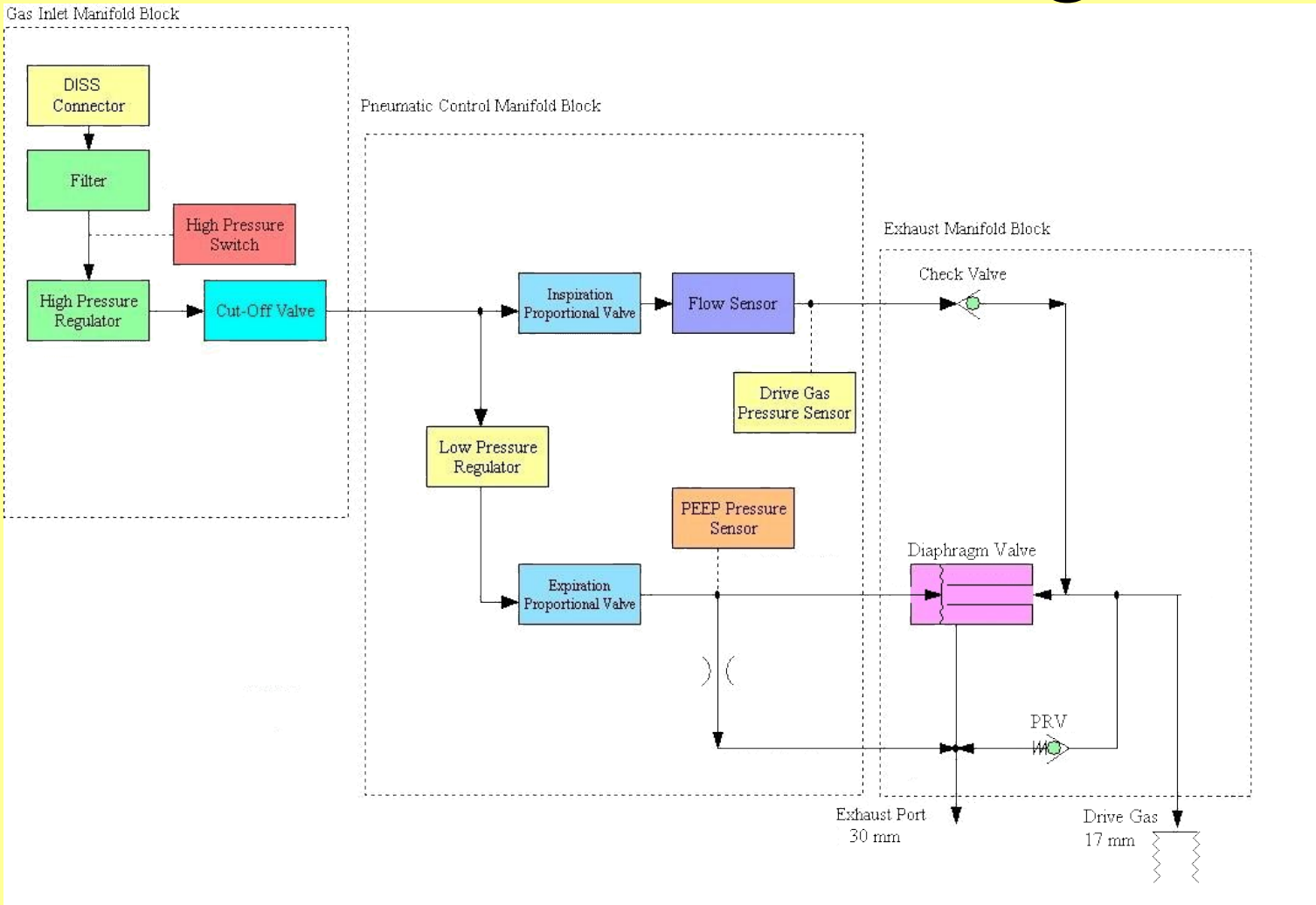

Gas Inlet manifold components

- Gas supply O_2 or Air:
  - 310 – 689 kPa.
    - 45 – 100 psi.
    - 80 L/min.
- Inlet filter:
  - 40 micron.
  - Accessible from outside the unit.
- High Pressure switch:
  - Set to open at 240 kPa falling.

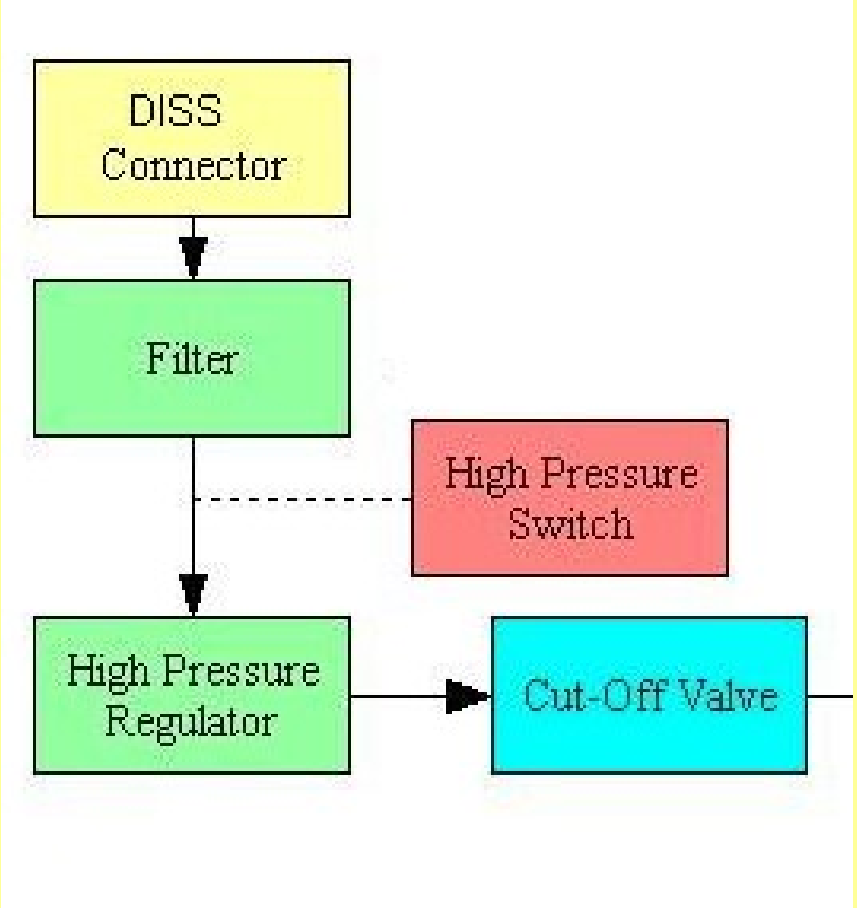

Gas Inlet manifold components

- Gas regulator:
  - Set to 260 ±21 kPa (38 ± 3 psi) @ 5 L/min.
- Cut Off Valve:
  - Once on power is reduce by 30%.
  - Removes gas supply when unit is switched off.
  - Removes gas supply in fault condition.

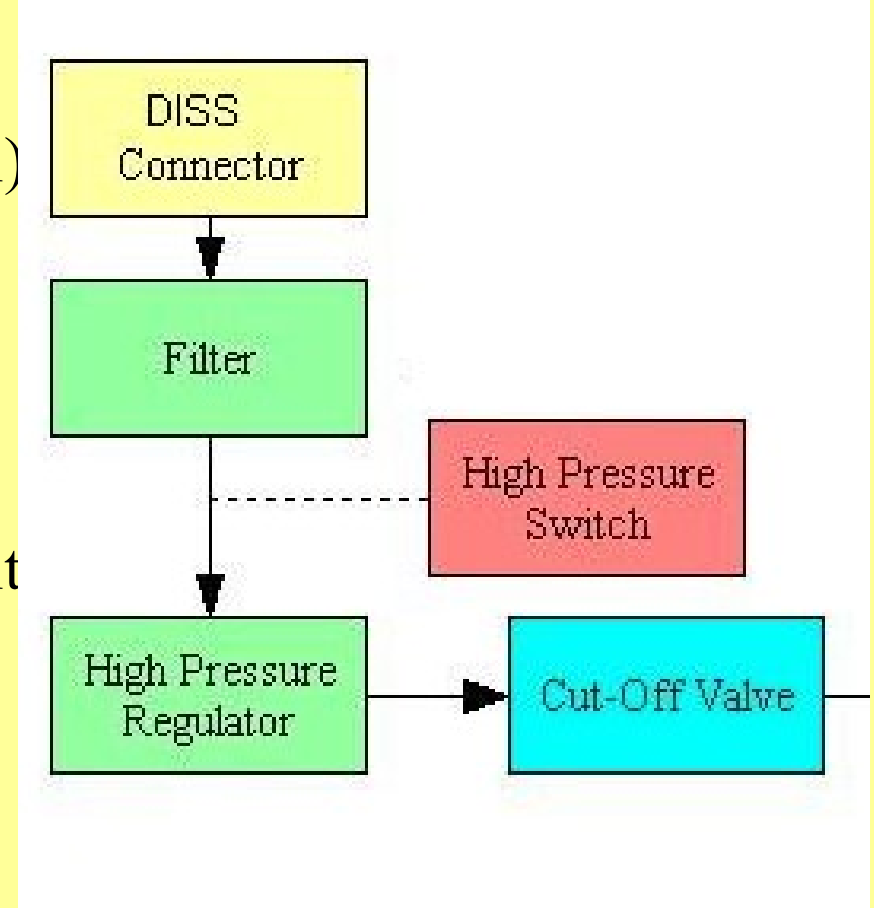

InterMed Penlon

Gas Inlet Manifold gas path

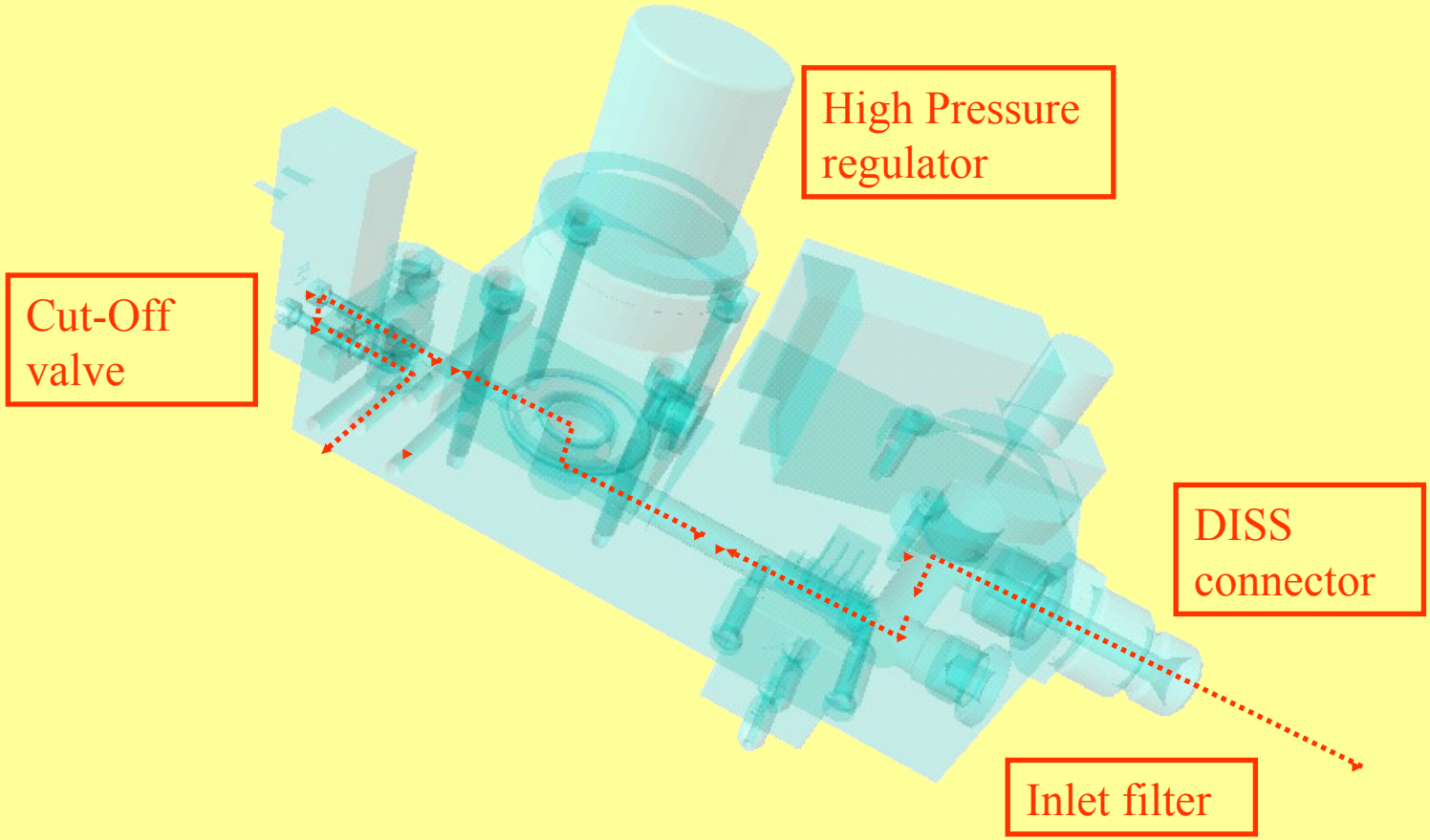

Penlon

Pneumatic Control Block

- Drive Gas Proportional valve.
  - Microprocessor generates a PWM signal to control current in proportional valve.
  - Operates between 3.5 - 13.5 Vdc.
- Flow Sensor.
  - Provides feedback control to ensure correct output from proportional valve.
  - Will detect proportional valve malfunction.
- Drive Gas Pressure sensor.
  - Detects drive gas line occlusion.

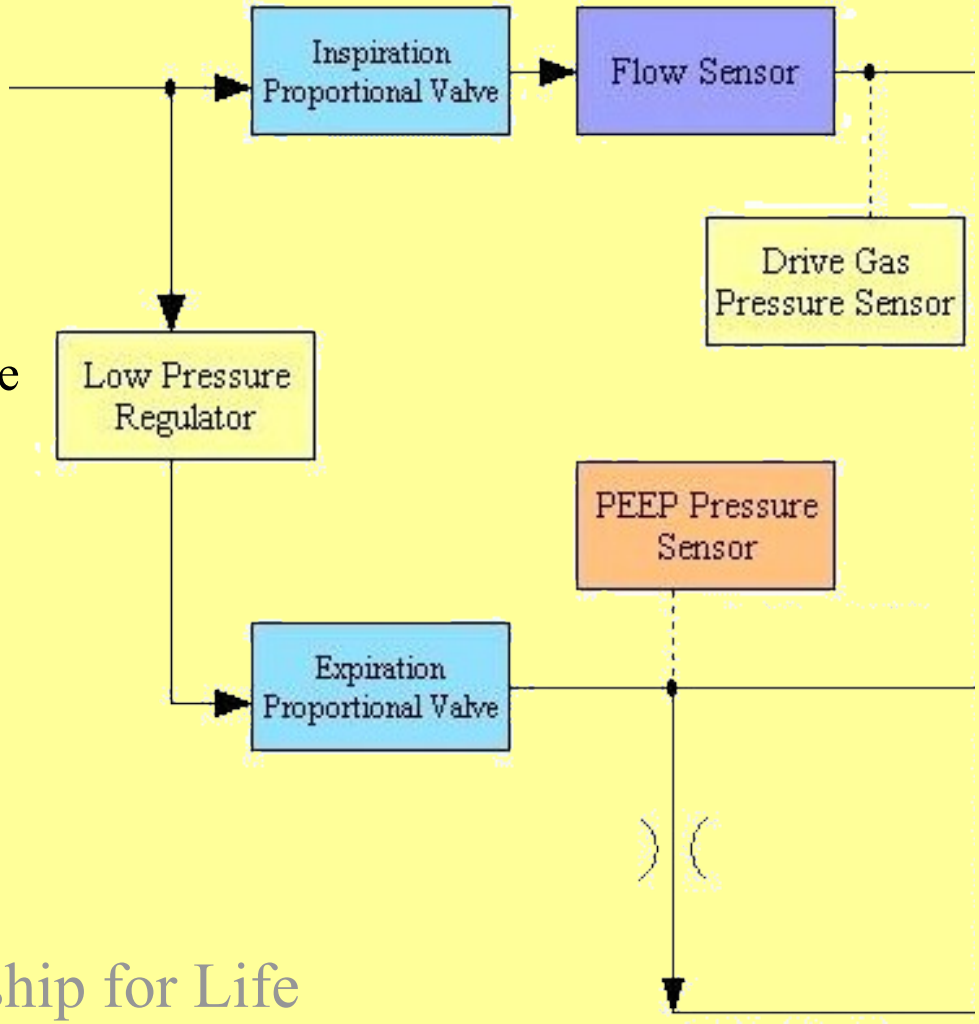

Penlon

Pneumatic Control Block

- Low pressure regulator
  - Approximately 14kPa
  - Adjusted to give 95 cmH_2O at diaphragm valve
- Patient Proportional Valve
  - Controls flow through bleed resistor to set pressure on diaphragm
  - Approximately 95 cmH_2O during Inspiratory phase in volume ventilation
  - Controls pressure on diaphragm during PEEP; PCV; Pressure support
- PEEP Pressure sensor
  - Detects bleed occlusions
    - 108 cmH_2O - Outlet Blocked
    - 120 cmH_2O - PVP sensor error - Ventilator inoperative

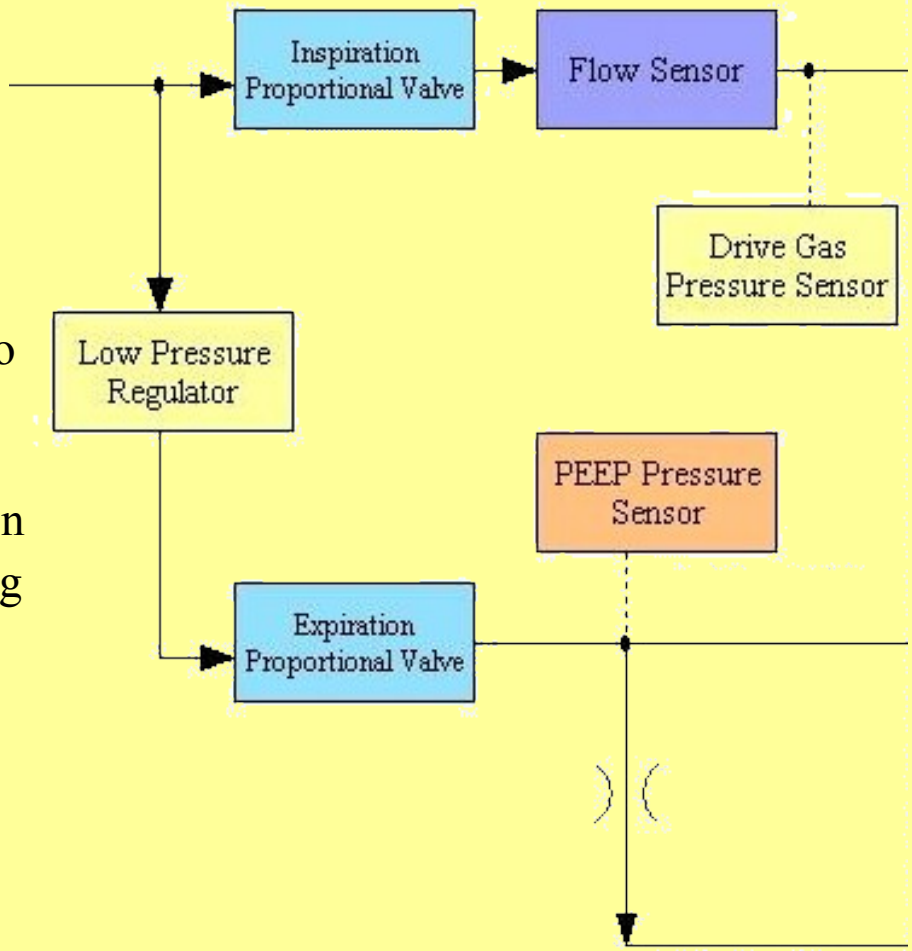

Penlon

Pneumatic Control Block

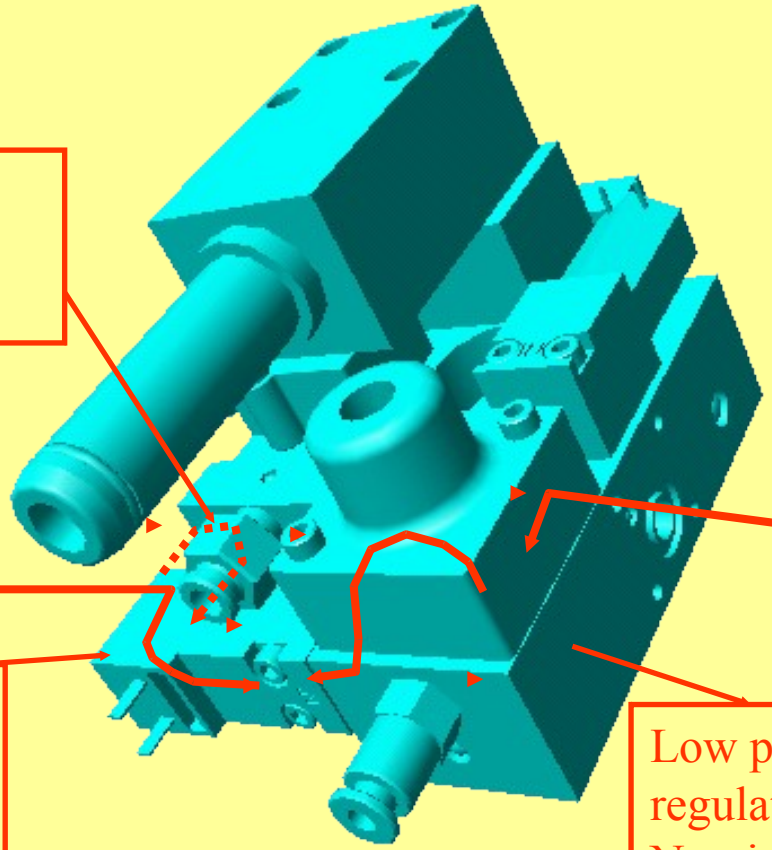

Penlon

Patient Valve Block

- Removable and Auto-clavable.
- Check valve:
  - Duck-bill style valve.
  - Prevents exhaust gases entering the drive gas system.
- Diaphragm valve:
  - Diaphragm closed during Inspiratory phase.
    - Approx. 95 cmH_2O.
  - Variable pressure applied to diaphragm sets pressure control and PEEP.
  - Approx. 20 cmH_2O spring for open bias.
- Pressure relief valve:
  - Provides mechanical relief @ 100 cmH_2O.

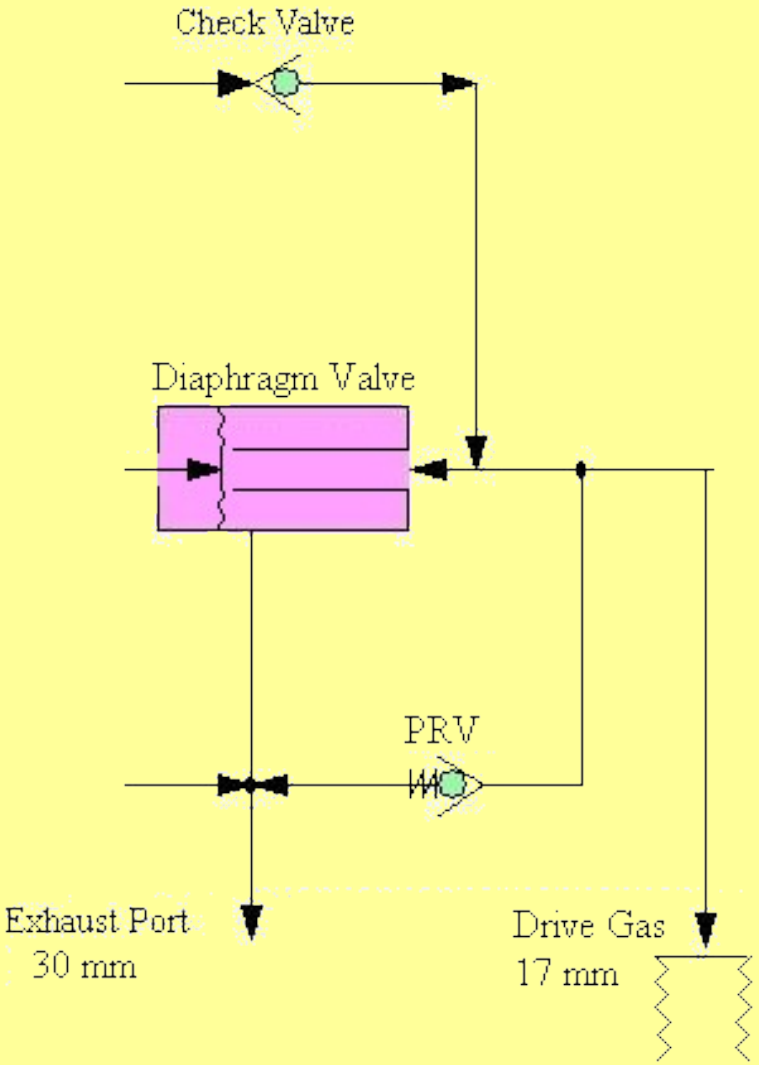

Penlon

Diaphragm valve (Inspiratory Phase)

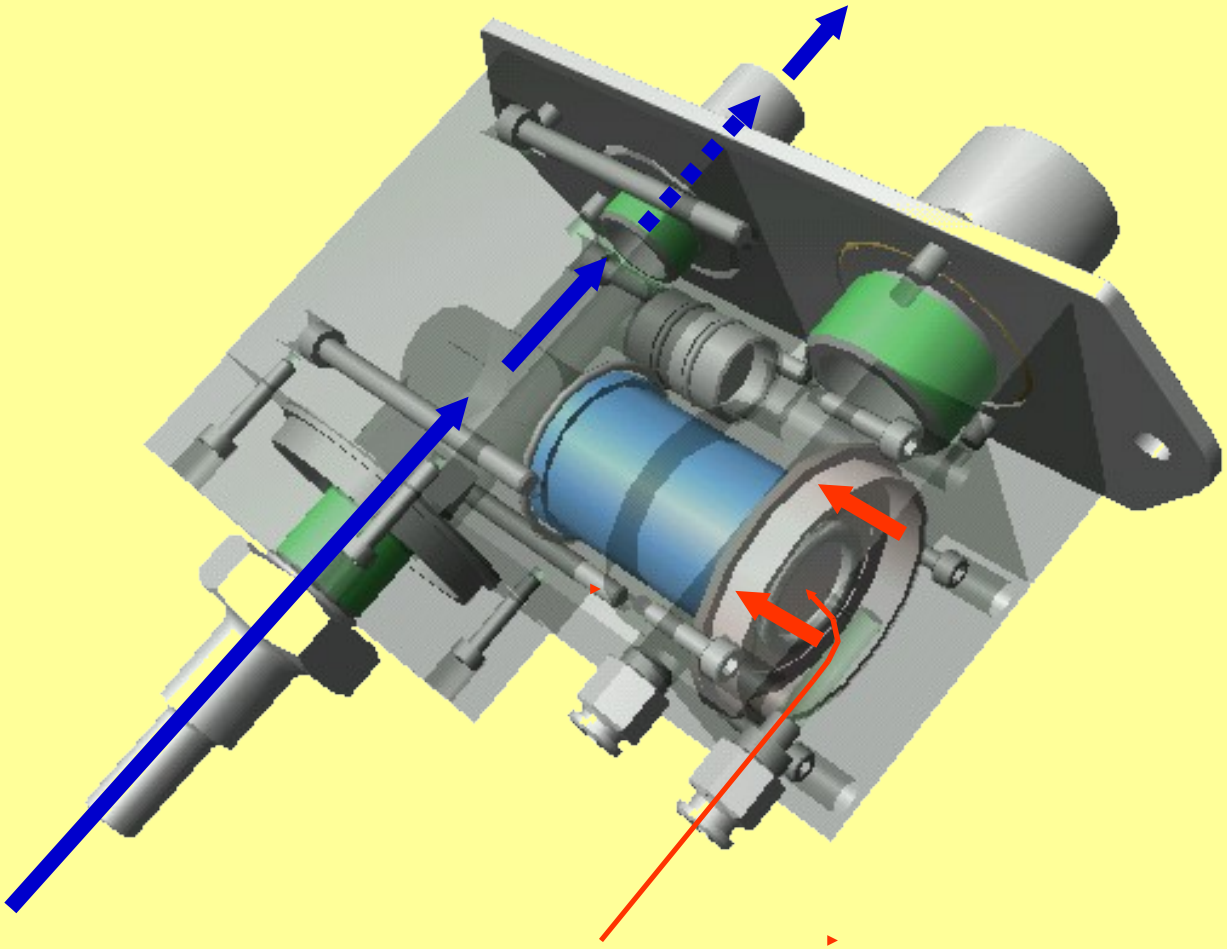

Penlon

Diaphragm valve (Expiratory Phase)

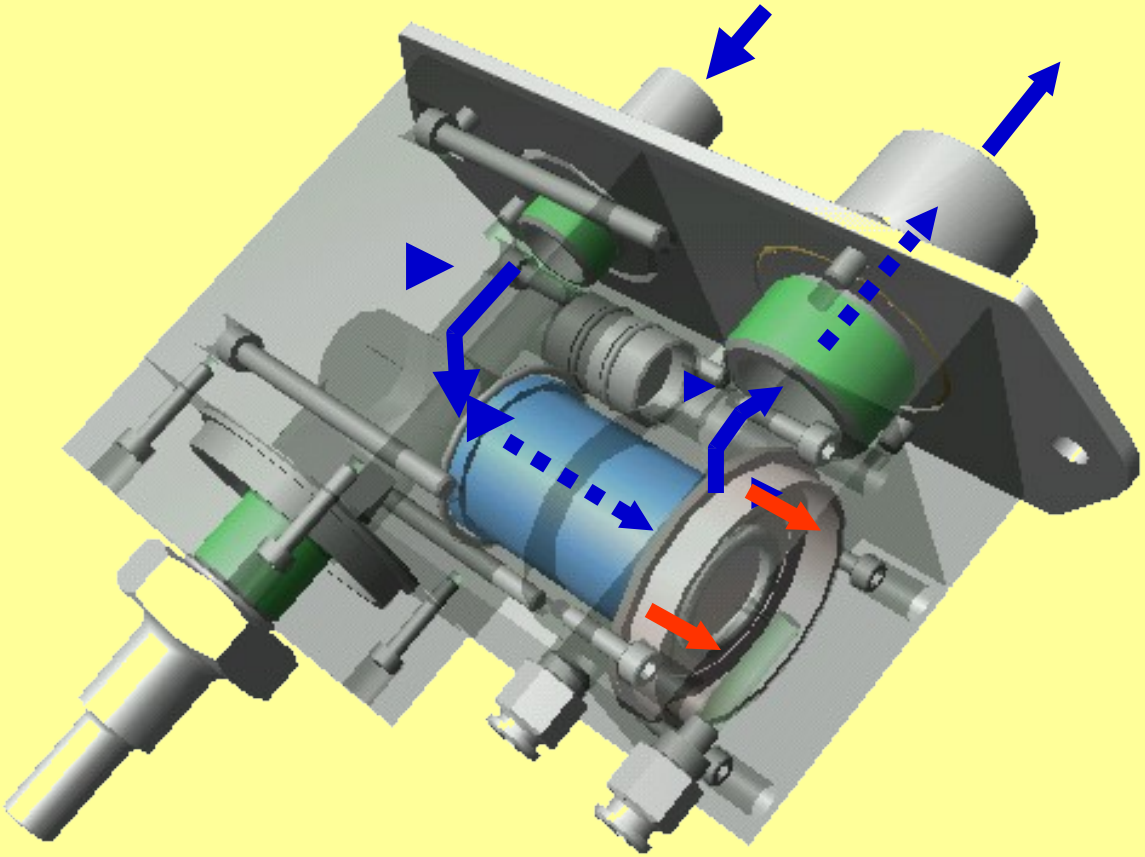

InterMed Penlon

Main Tray Assembly

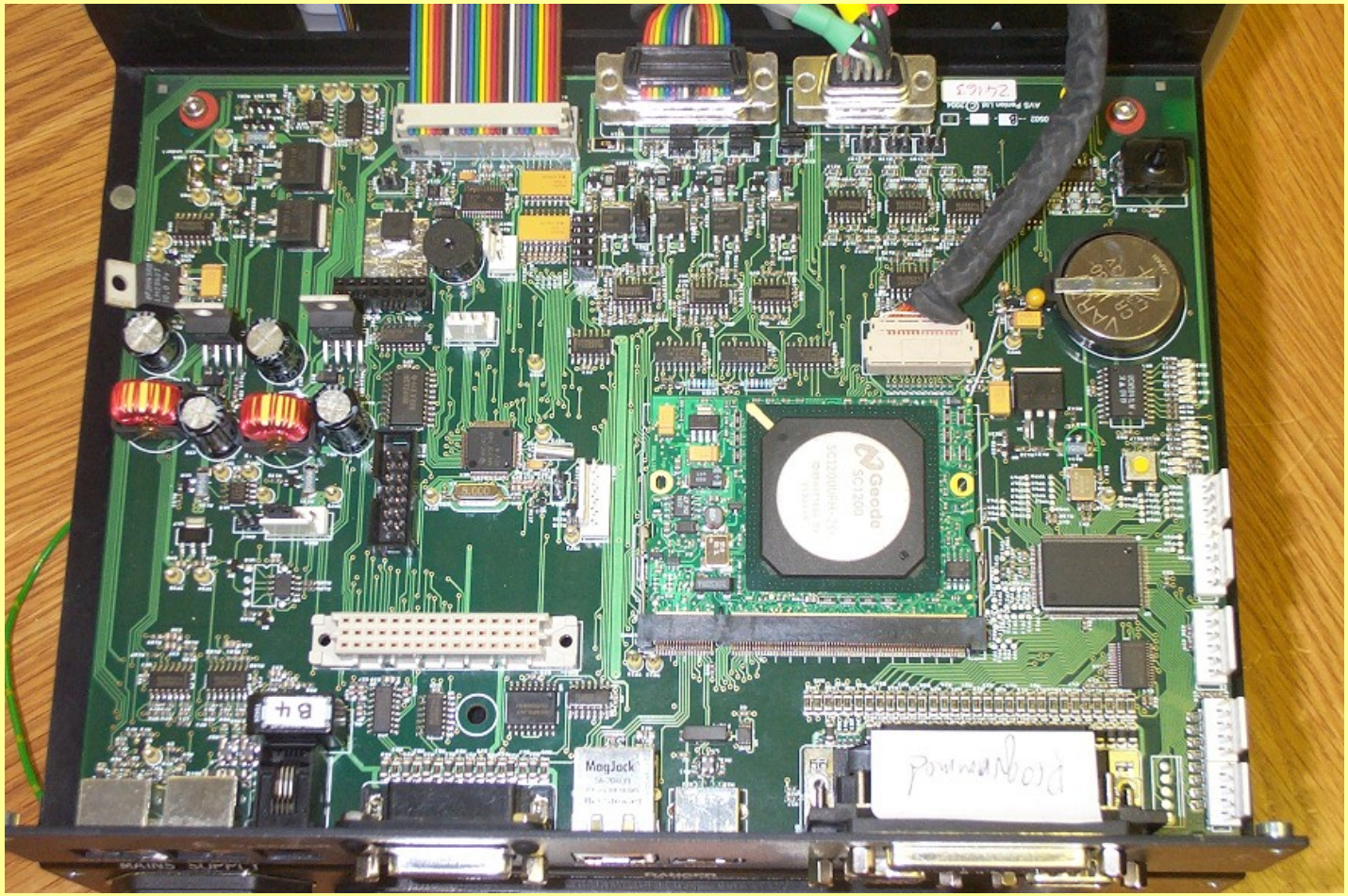

Partnership for Life

Main Tray Assembly

- The main tray assembly controls all the functionality of the AV-S.
- Due to prohibitive costs Penlon do not repair defective or faulty boards. Boards will be replaced under warranty or can be supplied if outside of warranty period.

InterMed Penlon

Main PCB connections

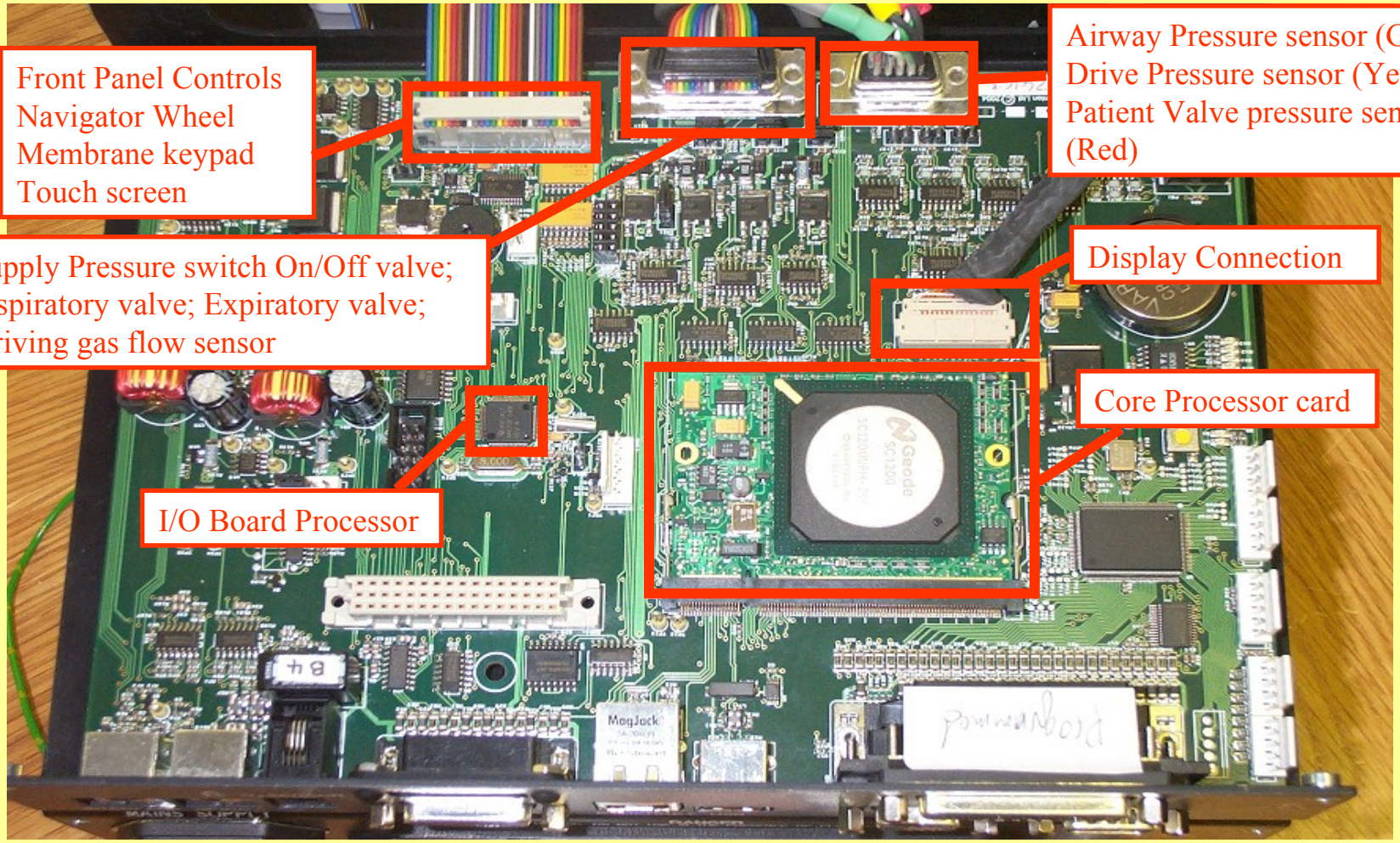

InterMed Penlon

PCB Features

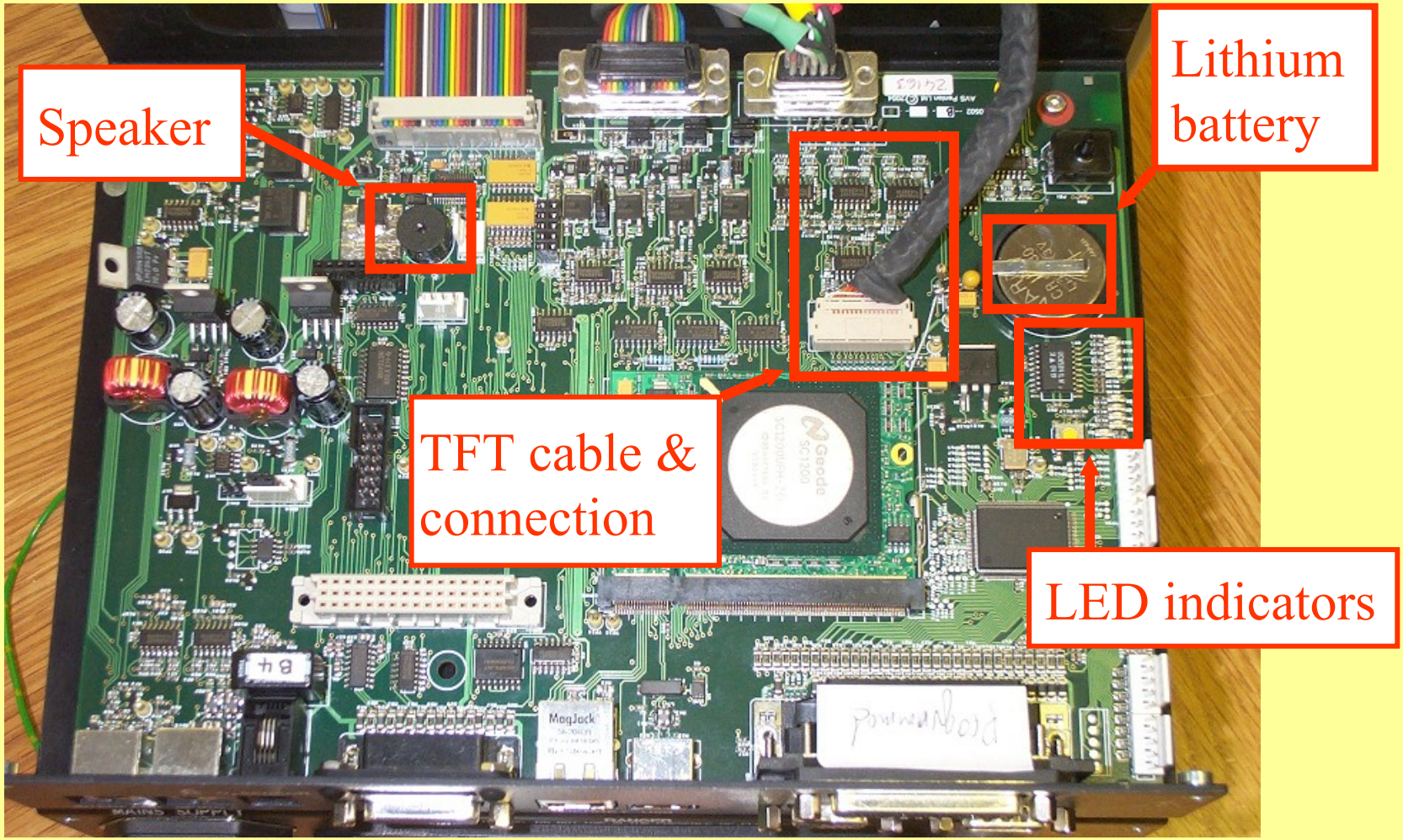

LED indicators

- LED-11 (nearest front): heartbeat
- LED-10: lit when drive valve is powered
- LED-9: lit when patient valve is powered
- LED-8: lit when touch-screen pressed
- LED-7: lit when I/O board running in test-harness mode
- LED-6: flashes to indicate Ethernet activity
- LED-5: lit when 100Mbit Ethernet present
- LED-4 to LED-1: no function currently assigned

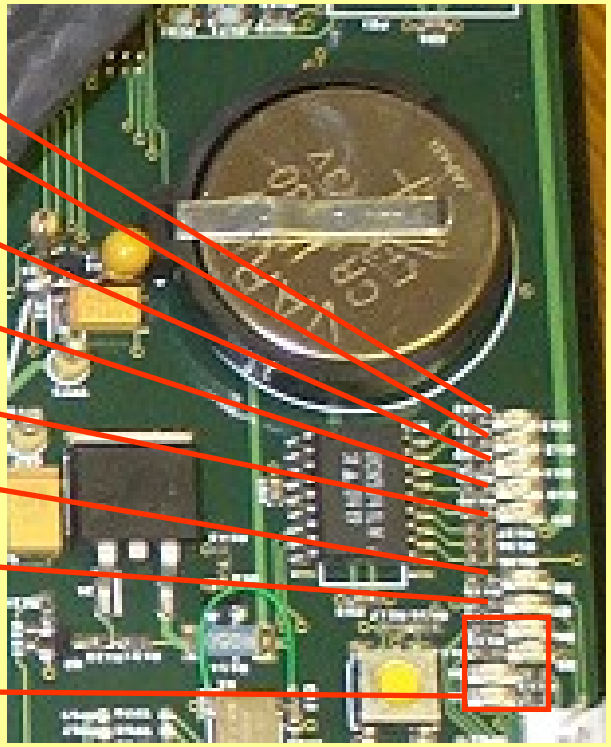

Front panel

- 8.4" TFT colour screen.
- Touch screen is resistive X-Y matrix.
  - Light touch membrane.

- Direct graphic cable from main board CPU core.
- Ribbon cable to Encoder Board routes.
  - Serial communications signals for Led's, Membrane switches, Rotary encoder and touch screen.
  - 5V for TFT inverter board.
- Remote front panel Encoder board contains LVDS receiver.
    - All signals through LVDS RX board.
    - Main board requires LVDS TX board.

Penlon

CPU Core and TI Processor

- CPU Core:
  - Mounted in removable card slot.
  - Holds main software.
  - Main ventilator control.
  - External communications.
  - LCD and VGA controller.

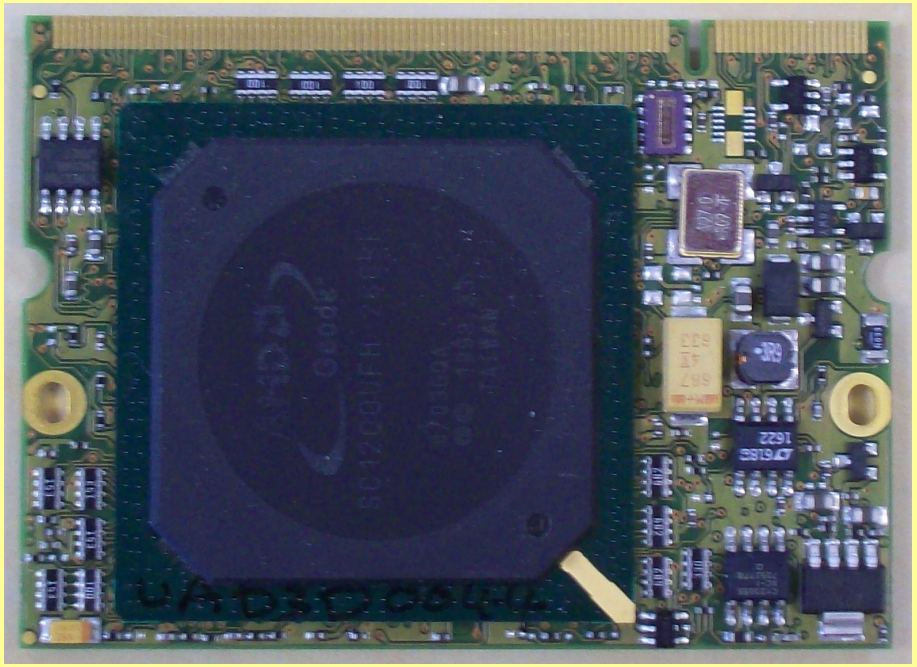

- I/O Board processor:
  - Control and communication with internal peripheral devices.

Penlon

Power Supplies

- Main supply.
  - 14.2 Vdc from power supply unit.
- Battery supply.
  - 12Vdc 1.2Ah lead acid - 3 Amp delay fused.
  - Will power ventilator for 30 minutes from full charge.
    - Screen goes to low power mode on battery.
  - Battery low alarm at 11.5V.
  - Medium priority alarm at 10.8V.
    - Approx. 5 minute power remaining.
  - Shut down at 10.4V.

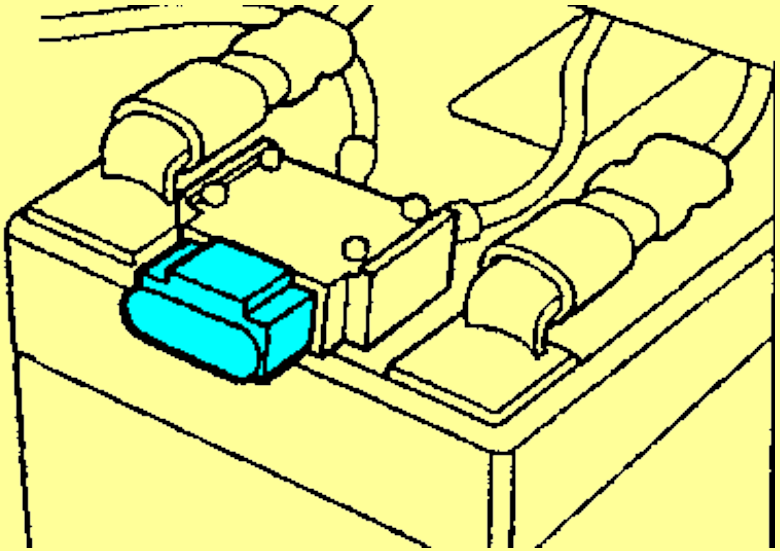

Power Supplies

- Lithium battery:
  - Support real time clock for error.
  - Vent' Inoperative if defective.

Penlon

Power supplies

- Medical grade filtered IEC connector
  - Line and neutral fused T2A
- 14.25 Vdc supplied from switch mode power supply 60W
  - Voltage and Current limited
- On board supplies
  - Regulated +12Vdc
  - LT1074 switch mode converter provides
    - +3.3Vdc
    - +5Vdc
    - +10Vdc

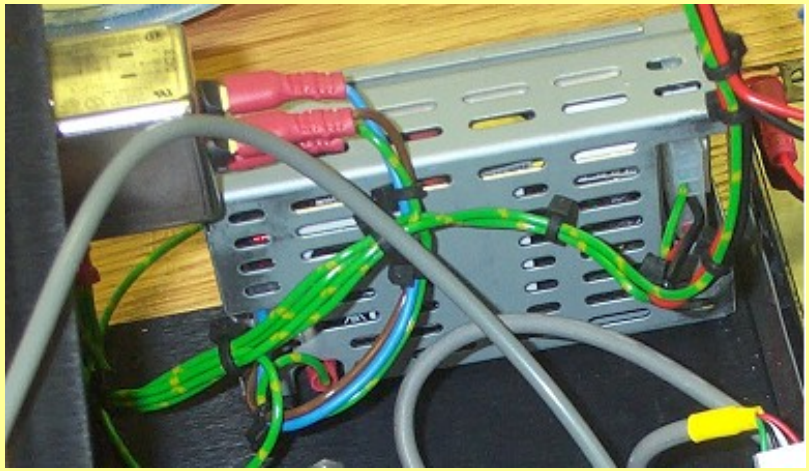

Penlon

Drive Gas Proportioning valve

- Uses +12V supply.
  - Initial output set according to user settings.
    - gives 2 – 75 l/min.
  - Current through valve controlled using FET.
  - FET controlled by micro-processor through a digital/analogue converter to give 4.5 – 11.5Vdc across valve.
  - Accurate delivery set using feed back from flow sensor.
    - + 10Vdc supply.
    - 0 – 5 Vdc output.

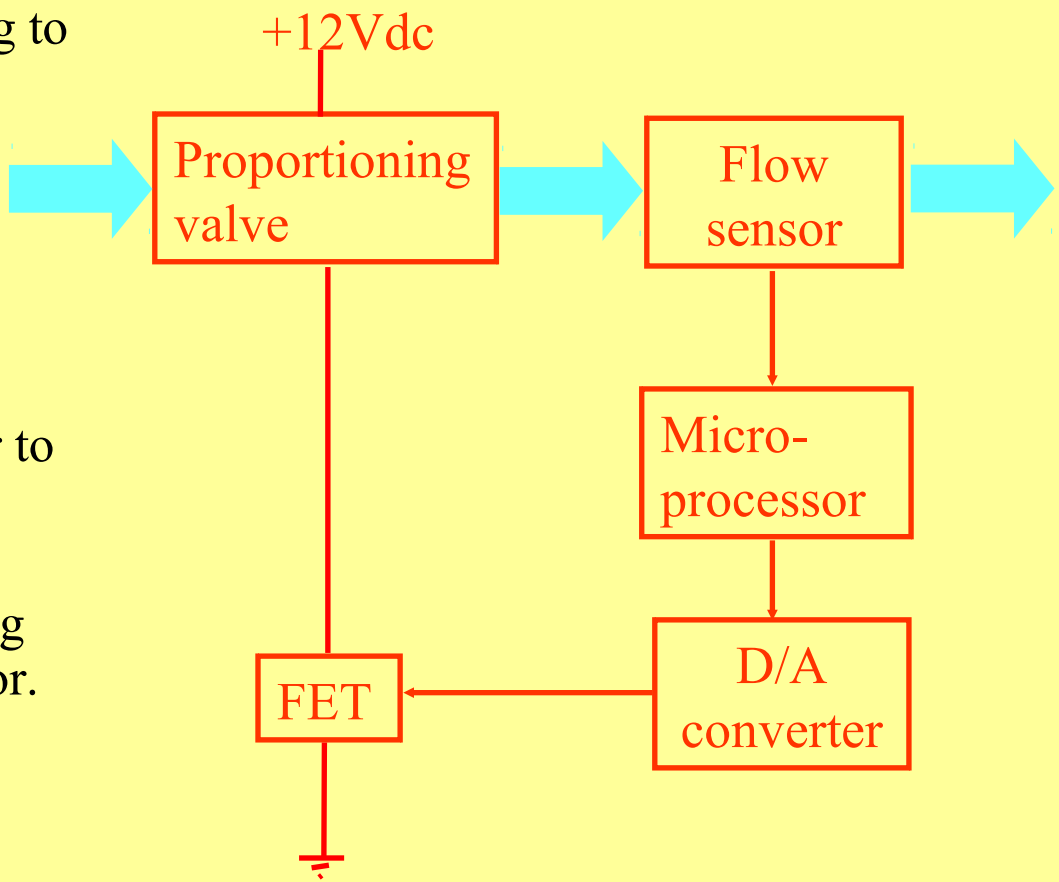

Penlon

Patient Proportional valve

- Uses +12V supply
  - Initial pressure on diaphragm set according to user settings
  - Current through valve controlled using FET
  - FET controlled by micro-processor through a digital/analogue converter to give 3.5 – 13.5Vdc across valve
  - Delivery adjusted to maintain airway pressure
    - 0 – 95 cmH_2O
  - Pressure sensor monitors for high pressure condition
    - Outlet blocked

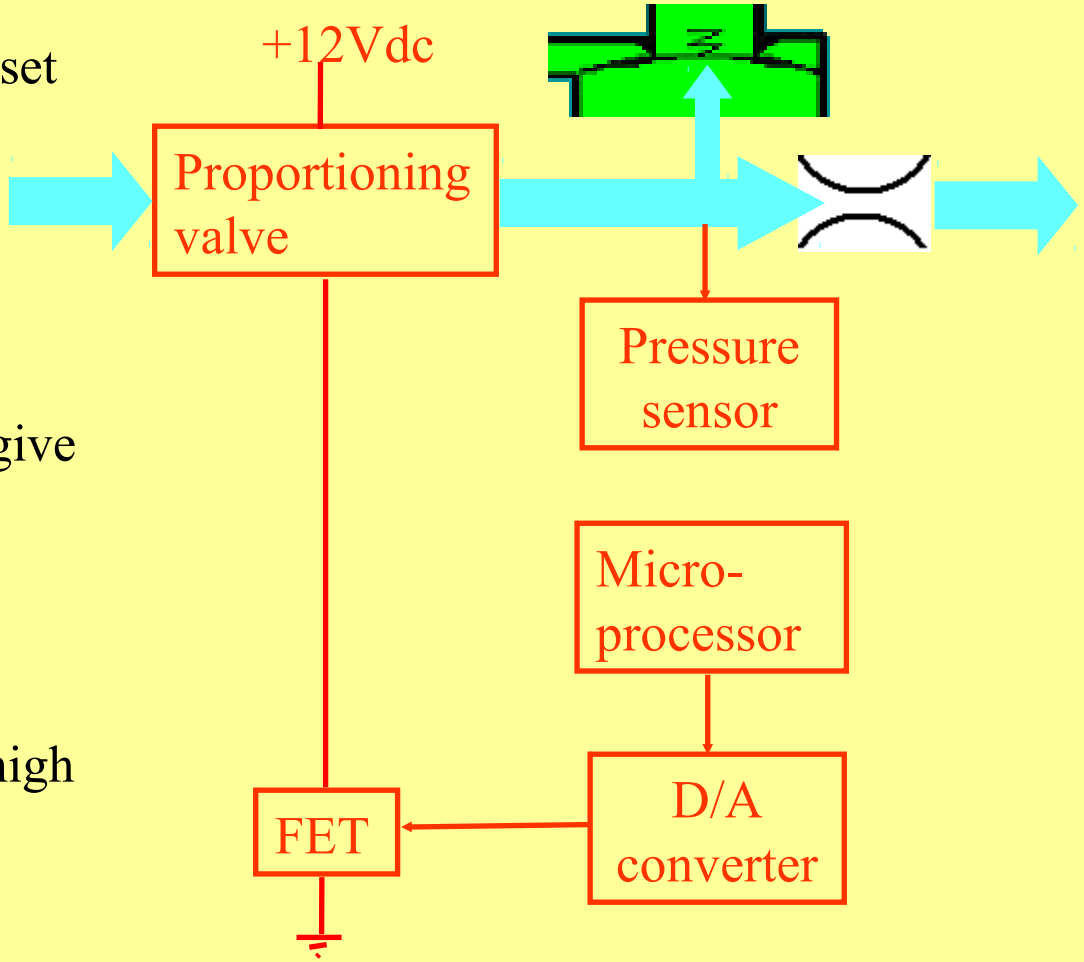

Penlon

Pressure Switches and Sensors

- Supply Pressure switch:
  - Monitors gas supply pressure.
  - Switch is normally open.
    - Greater than 262 kPa (38psi) and switch closes.
    - Less than 240 kPa (35psi) and switch opens.
- Drive Gas pressure sensor:
  - 0-80cmH_2O pressure sensor.
  - High airway pressure protection.
  - Safety feedback in pressure control ventilation.
- Patient Valve pressure sensor:
  - Monitors pressure on Diaphragm valve.

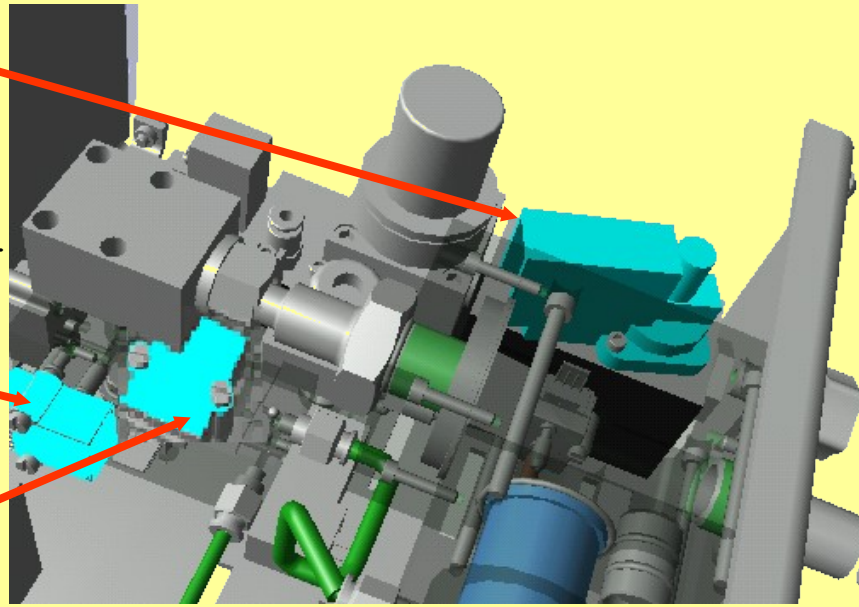

Penlon

Pressure transducers

- Airway and barometric pressure:
  - Measures from expiratory line.
  - Highly accurate device < 0.1% drift per year.
  - As pressure applied to silicon the resisters generate a proportional voltage.

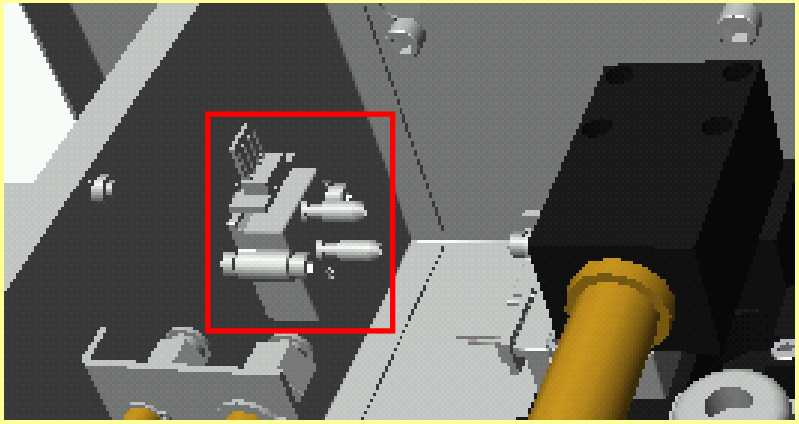

InterMed Penlon

Interface connections

- Parallel printer port:
  - Uses HPPCL4.
- VGA:
  - Provides output for external display.
- RS232:
  - Proprietary use only.
- LVDS:
  - Used for remote control panel ventilators.
- Ethernet:
  - Allows network connection.
- USB:
  - Used for software/keyboard commands upgrade.

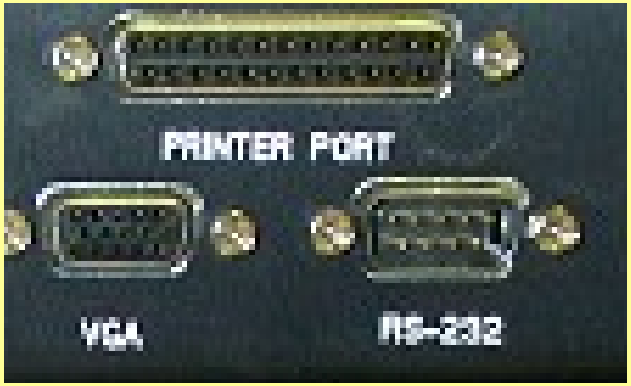

Penlon

Data outputs

- DB15 socket.
- 6 Analogue channels 0-5Vdc:
  1. Paw **–10 to +100 cmH_2O.**
  2. Average Paw **–10 to +100 cmH_2O.**
  3. Vt measured **0 – 2 litres.**
  4. Inspiratory Flow **0 – 100 l/min.**
  5. Vm measured **0 – 160 litres.**
  6. O_2% **0 – 100%.**
- Serial data RS232:

  7.Rx Vuelink protocol.

  8.Tx Vuelink protocol.
- Pins 9 – 15 grounded.

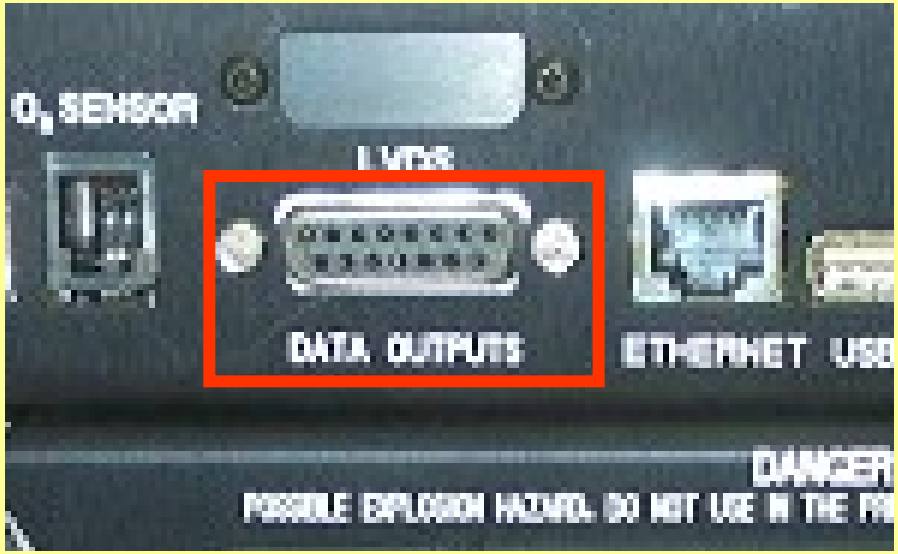

Any Questions?

InterMed Penlon

AV-S Ventilator

Service and calibrations

Practical workshop

Partnership for Life

Aims and objectives

- Aim
  - The aim of this module is to explain the service, maintenance and calibration procedures required for the AV-S
- Objective
  - By the end of this module the student will be able to
    - Remove and replace major sub-assemblies
    - Carry out routine service procedures
    - Perform tests and calibration checks

Penlon

Removal of sub-assemblies

- Front panel display.
- PCB tray.
- Pneumatic Control manifold.
- Power supply unit.
- Battery.
- Patient Block.
- Gas Inlet manifold.
- Bellows assembly.

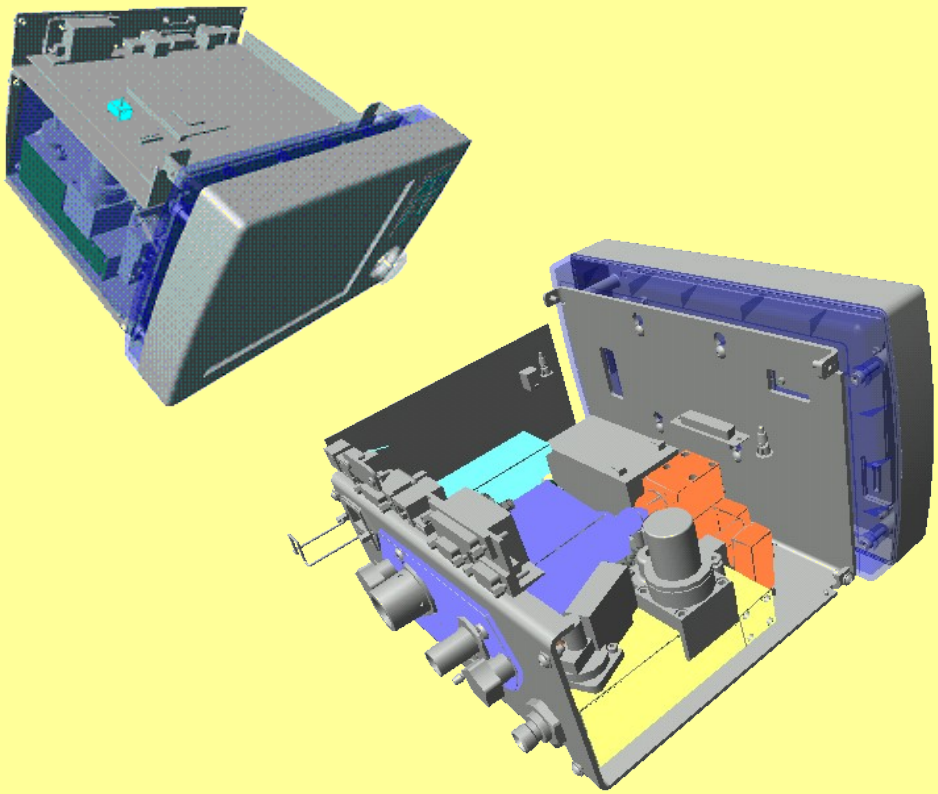

Penlon

Front panel display removal

- Disconnect mains supply and remove top cover.
- Remove five screws:
  - Two from each side at rear of front panel.
  - One from centre of panel.
- Unplug two cables from front panel.
- Identify:
  - Navigator wheel connection.
  - Membrane keys connection.
  - Inverter board.

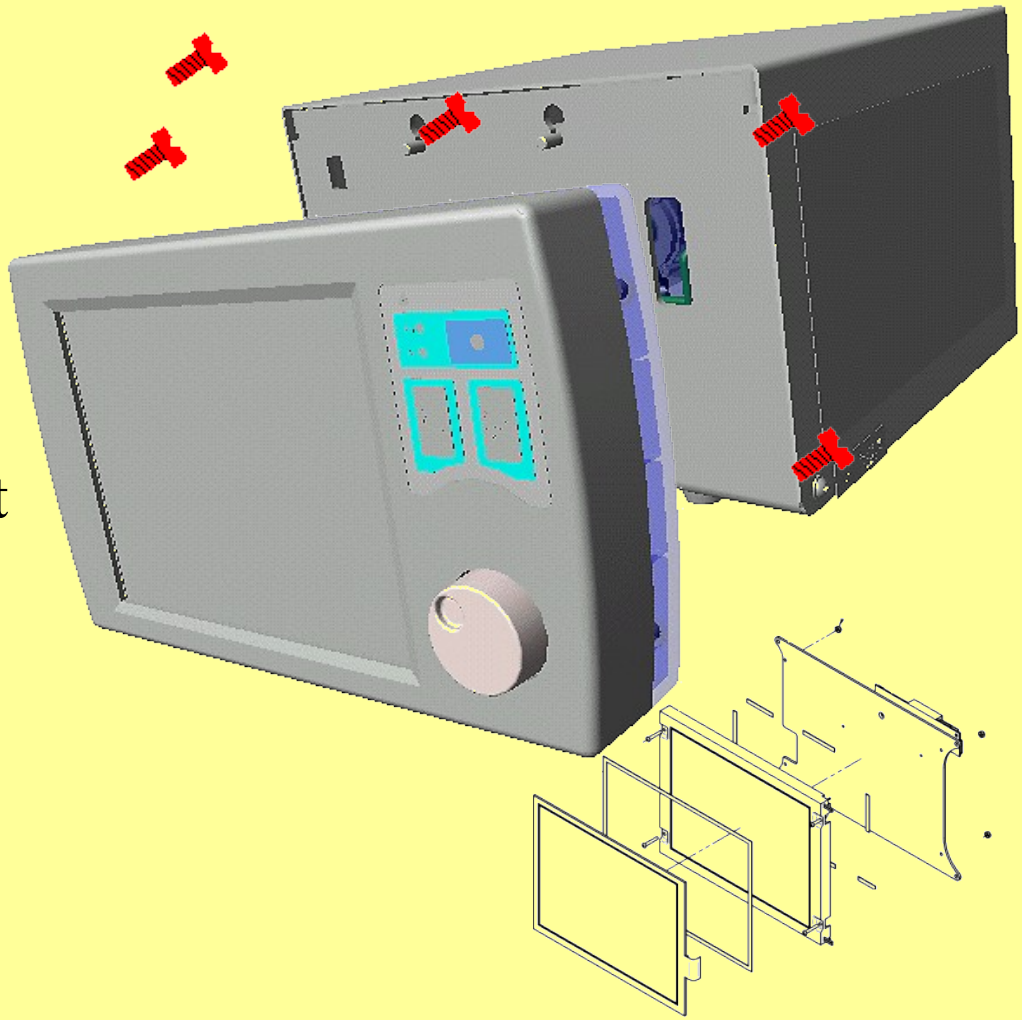

Penlon

PCB tray removal

- Disconnect mains supply and remove covers.
- Remove battery fuse.
- Remove two tray screws.
- Lift up tray.
- Disconnect five electrical connectors.
- Identify:
  - Core Processor.
  - Pressure transducer.
  - Power circuit test points.
  - Lithium battery.
  - Control LEDs.
  - LVDS tx/rx board.

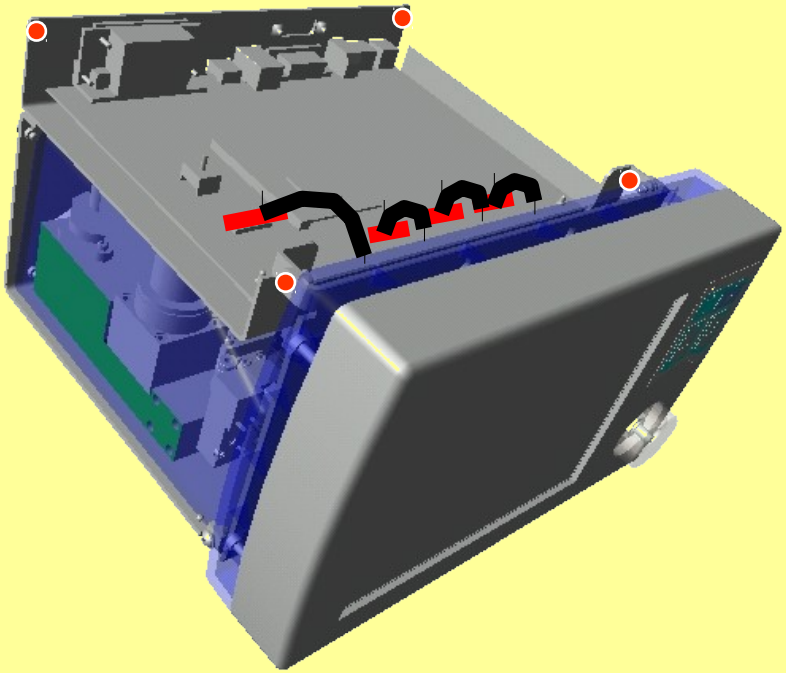

InterMed Penlon

Patient Block removal

- Undo two thumb screws and withdraw Patient Block.
- Identify:
  - Diaphragm valve.
    - Pressure connector.
    - Bleed connector.
  - One way valve.
  - Pressure relief valve.

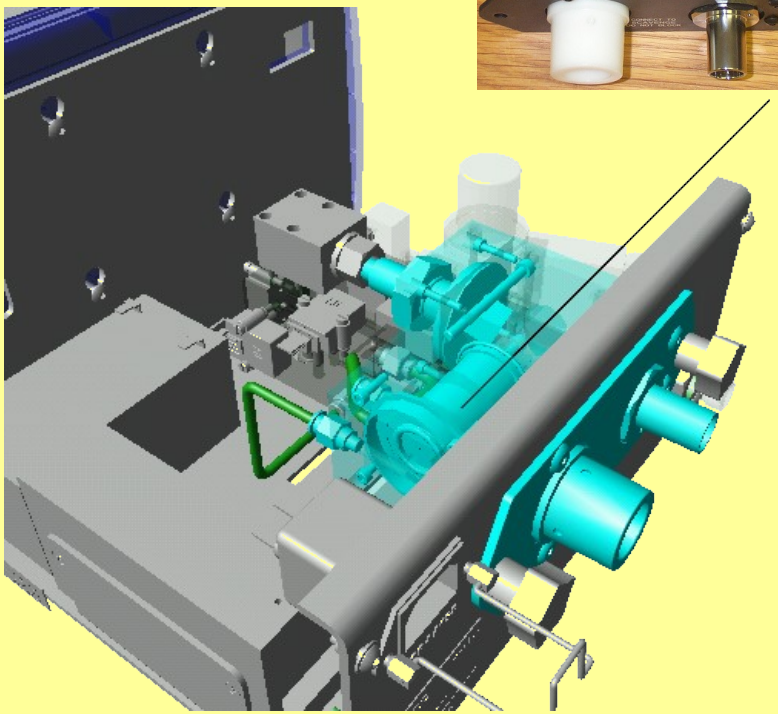

Penlon

Patient Block removal

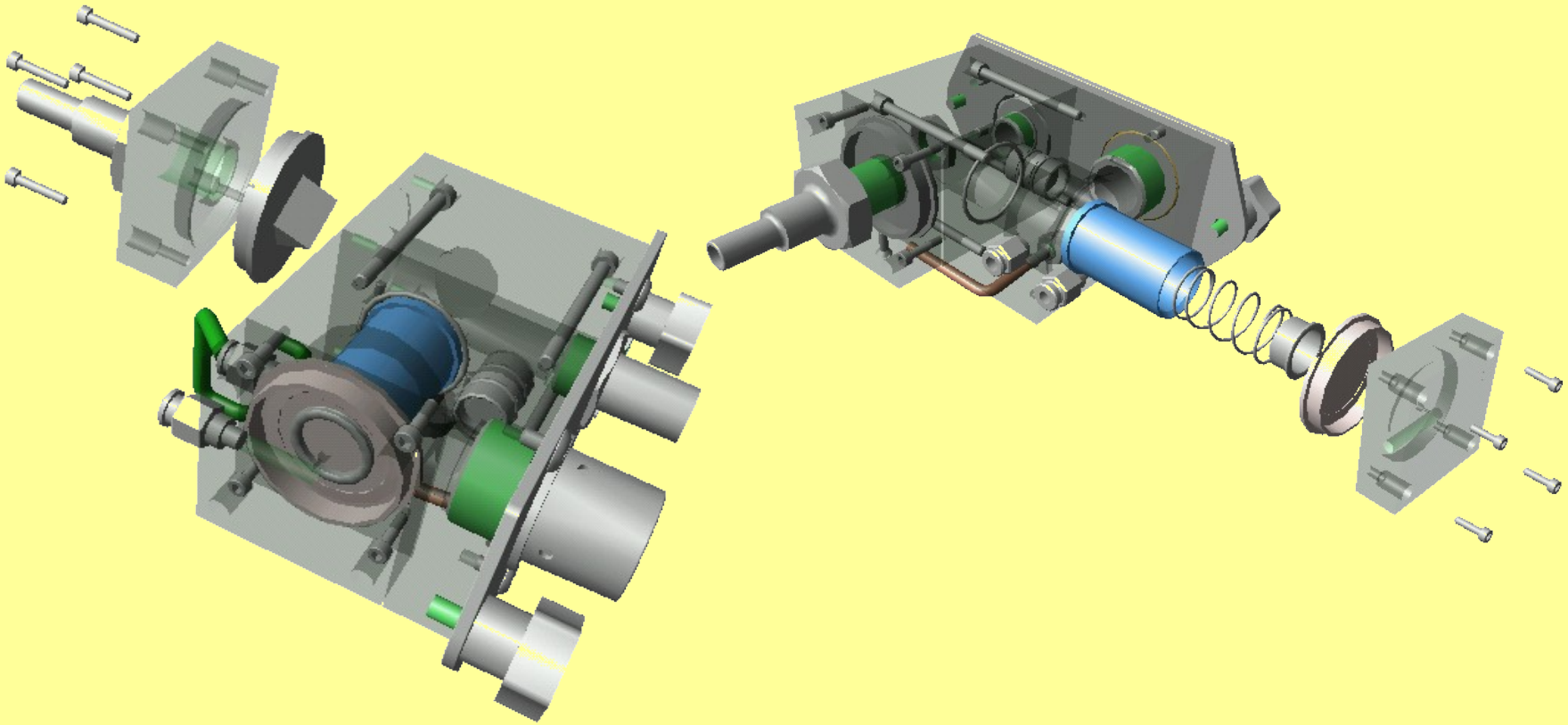

Penlon

Pneumatic components removal

- Disconnect gas supply.
- Remove PCB tray.
- Remove Patient Block.
  - Remove two screws from underneath.
  - Unscrew DISS fitting nut.
  - Disconnect the Patient Airway Pressure transducer (Green).
  - Disconnect two tubes.
  - Lift out assembly.

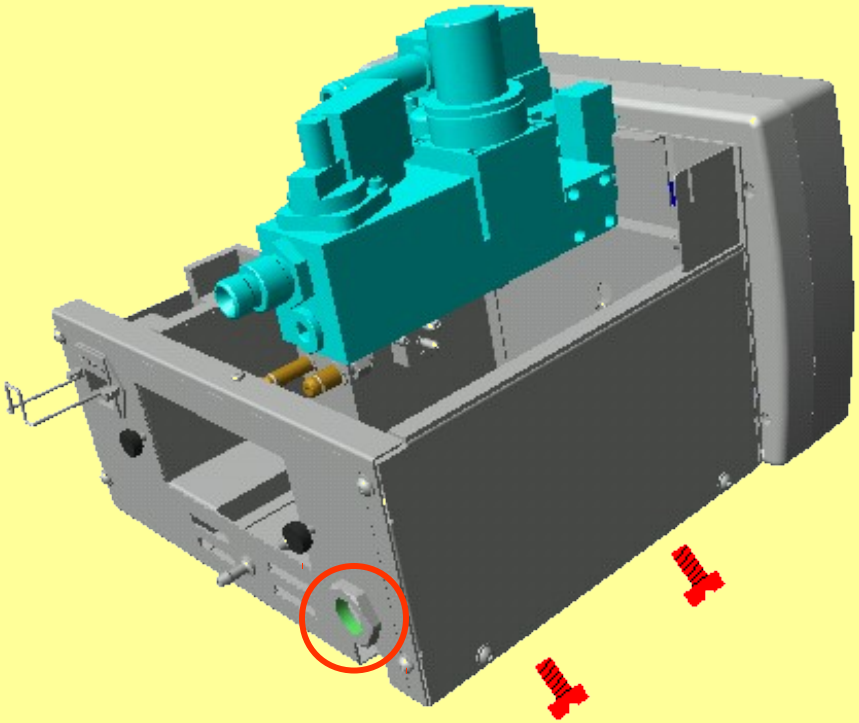

Penlon

Gas Inlet block Components

- Identify the following:
  - Inlet filter.
  - High pressure switch.
  - Regulator.
  - Pressure test point.
  - On/Off valve.

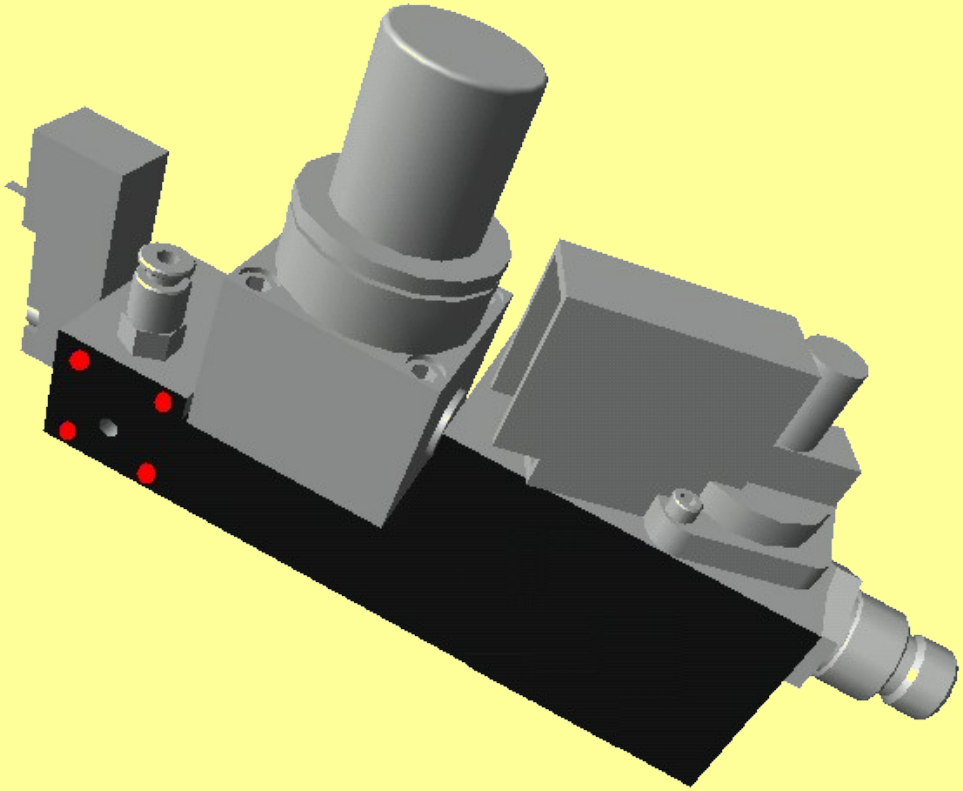

Penlon

Pneumatic Control block components

- Identify the following:
  - Drive Gas valve.
  - Patient valve.
  - Drive Gas pressure sensor.
  - Drive Gas Flow sensor.
  - Patient valve pressure sensor.
  - Low Pressure regulator.
  - Drive Gas connector.

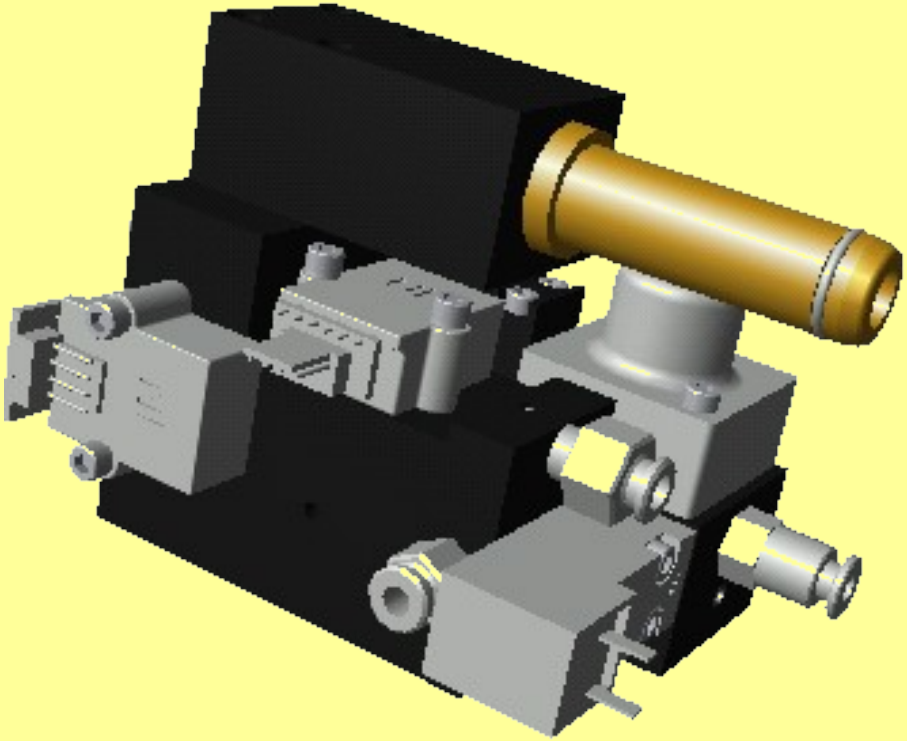

Penlon

Power supply removal

- Remove PCB tray.
- Disconnect fuse.
- Disconnect two electrical connectors.
- Remove two screws holding PSU to mounting plate.

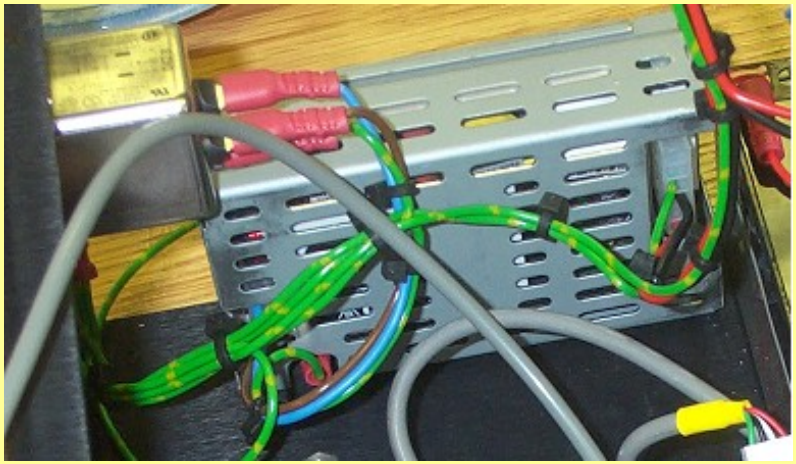

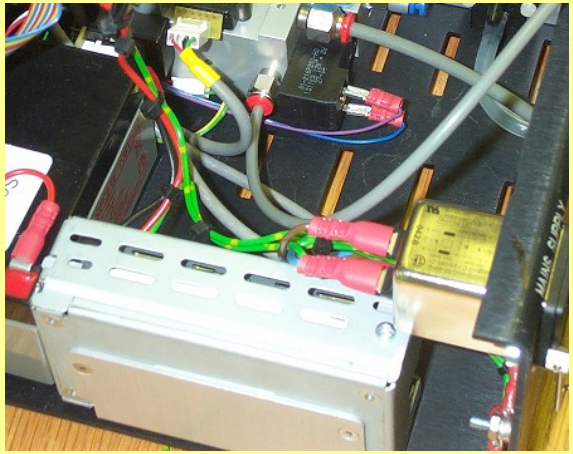

Penlon

Battery removal

- Remove fuse.
- Remove PCB tray.
- Lift out battery detaching from adhesive pad on chassis.
- Identify:
  - 3 Amp battery fuse.
    - Blade type.

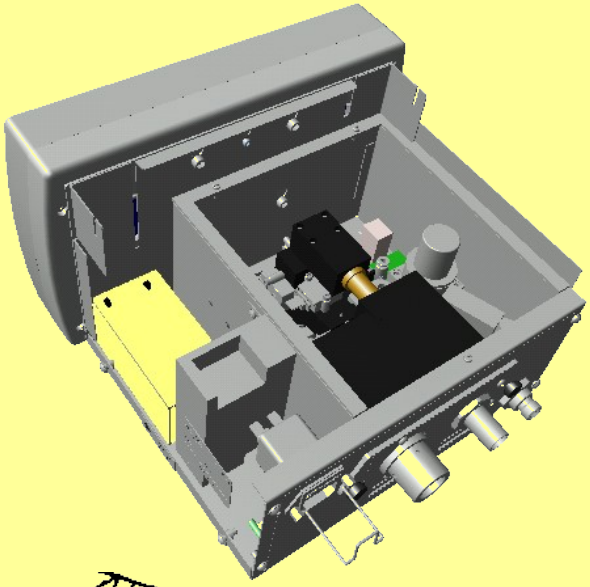

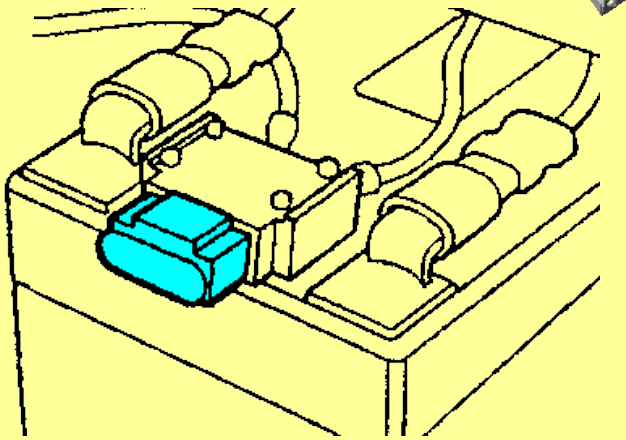

Penlon

Bellows assembly

- Twist the canister 90^0 and remove.
- Ease bellows from rim.
- Undo three screws and remove expiratory valve:
  - Note o-ring under valve.

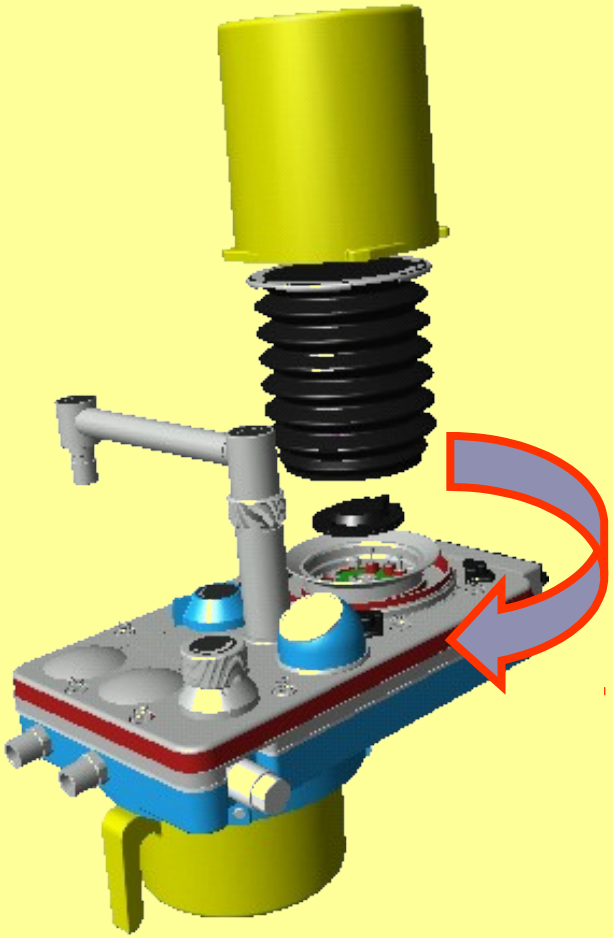

Service Procedure

- Four year Service program:
  - 6 Monthly.
    - No Preventive maintenance Kit (PMK) required.
  - Annual service.
    - PMK Pt No – 57298.
  - 2 Year service.
    - PMK Pt No – 57299.
  - 4 Year service.
    - PMK Pt No – 57300.

Penlon

Preventive Maintenance Kits

- All kits come with a data sheet listing components and detailed fitting instructions.

One year Kit Part No 57298
Patient Block Assembly:
Exhaust diaphragm 300580
One-way valve 300581
O-ring 5 mm 041204
O-ring 7 mm 041245
O-ring 12 mm 041222
Inlet filter 300560

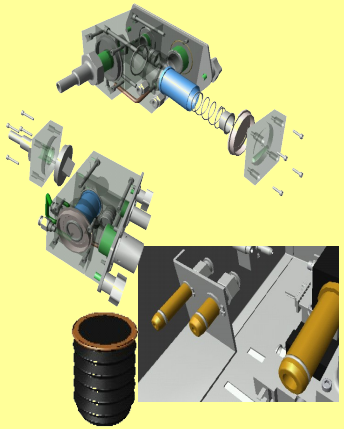

Service Procedure - 6 Monthly

- Check:
  - Mechanical damage.
  - Electrical safety (IEC class 1type B device).
  - Power on; display; control functions.
  - Supply voltages.
  - Error history.
  - Bellows diaphragm valve.
  - Operation in all modes.
  - All alarm functions.

Service Procedure - 6 Monthly

- Calibrate:
  - O_2 sensor.
    - 100%.
    - Check at 21%.
- Check Calibration:
  - Spirometery.
  - Gas Delivery.

Service Procedure - 6 Monthly

- Remove Patient Block.
- Examine Diaphragm valve.
  - Clean as necessary.
  - Strip and clean Spring, End Cap, and Insert.

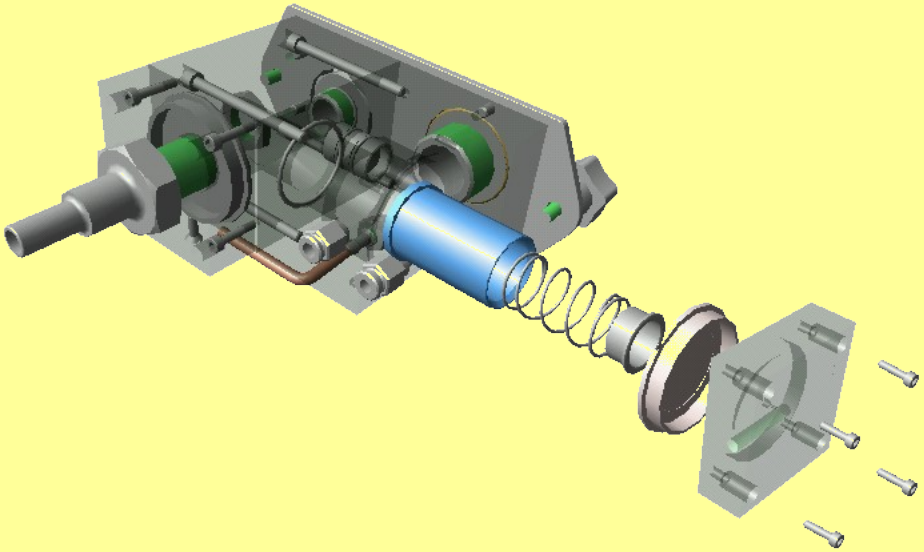

Penlon

Service Procedure - Annual

- In Addition to 6 monthly procedure.
- Check primary regulator.
- Check Patient valve pressure.
- Check proportional valves.
- Replace the following:
  - Probe o-rings.
  - Patient valve Diaphragm.
  - Patient valve Check valve.
  - Bellows.
  - Large and small bellows O-rings.

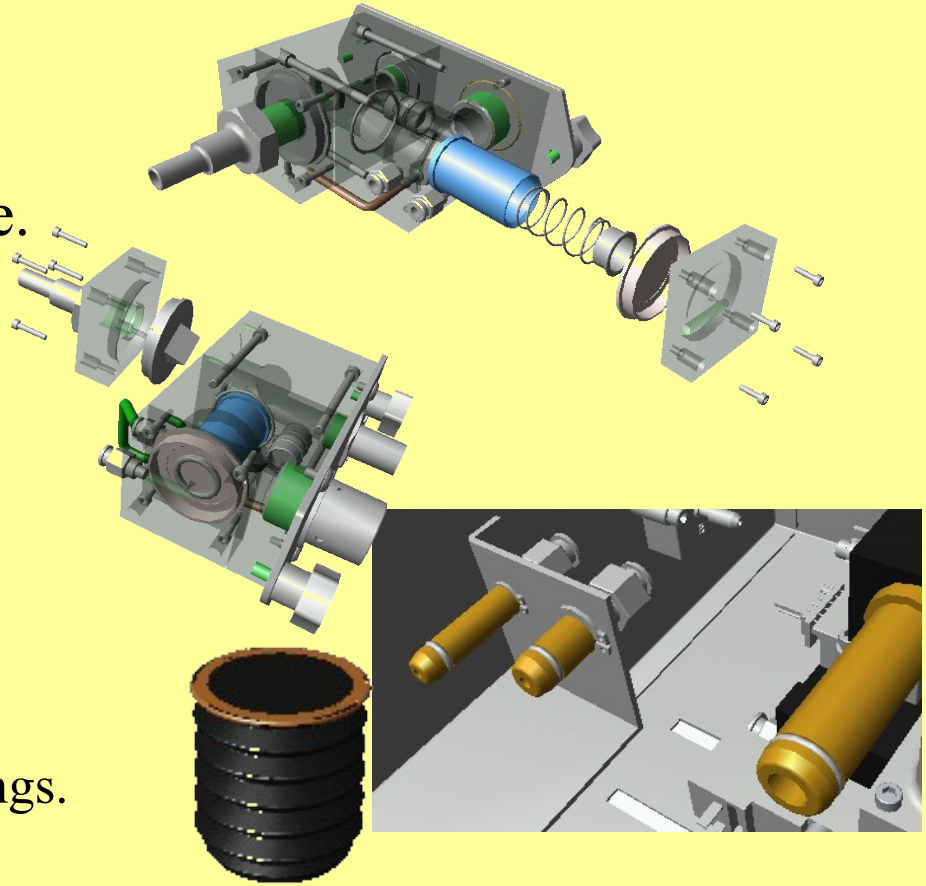

Penlon

Service Procedure - 2 year

- In addition to annual Service.
- Replace:
  - Mains back-up battery.

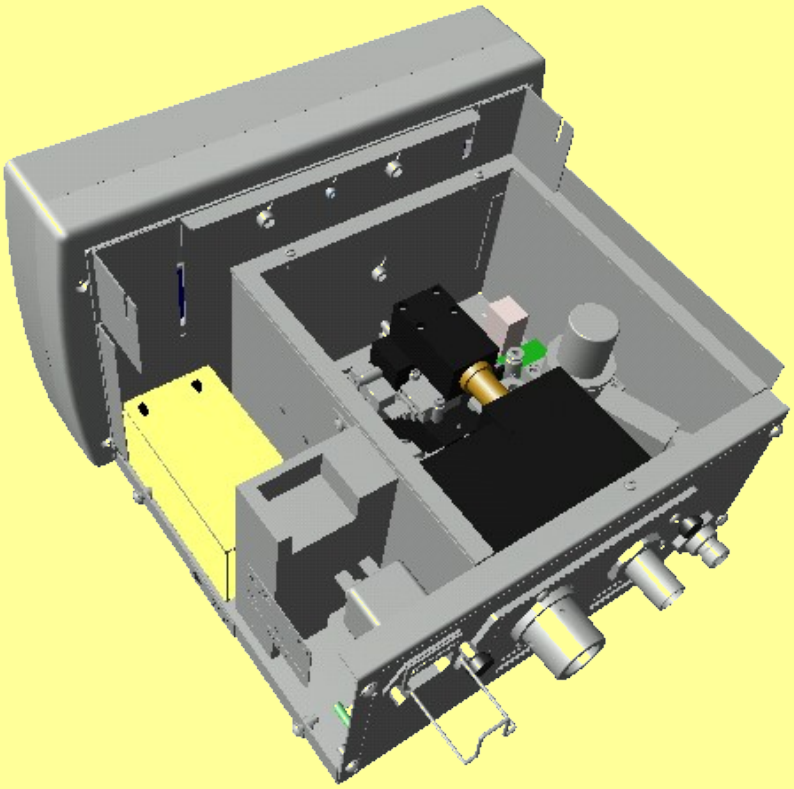

Penlon

Service Procedure – 4 year

- In addition to 2 year Service.
- Replace:
  - Patient block o-rings.
  - Patient block Pressure relief valve.
  - Lithium battery.
  - Bellows diaphragm.

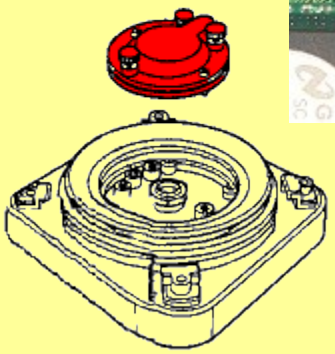

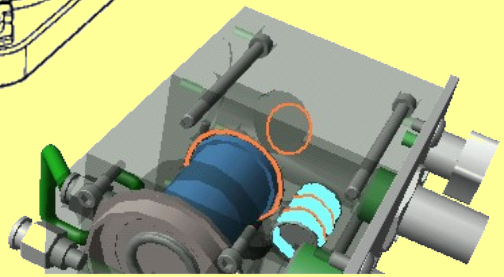

Service procedure

- Practical workshop:
  - Carry out an annual service in accordance with Service Manual section 7.

Any Questions?

InterMed Penlon

AV-S Ventilator

Calibrations and Adjustments

Practical Workshop

Partnership for Life

Penlon

Primary regulator calibration

- Dynamic measurement:
  - 260 kPa +21kPa (38psi +3psi) @ 5lpm flow.
- Connect test manometer to self sealing test point.
- Adjust gas flow to 5lpm.
  - Set front panel controls to:
    - Vt – 500 ml.
    - Rate – 5.
    - I:E – 1:1.
- Measure during inspiratory phase:
  - Adjust as necessary.

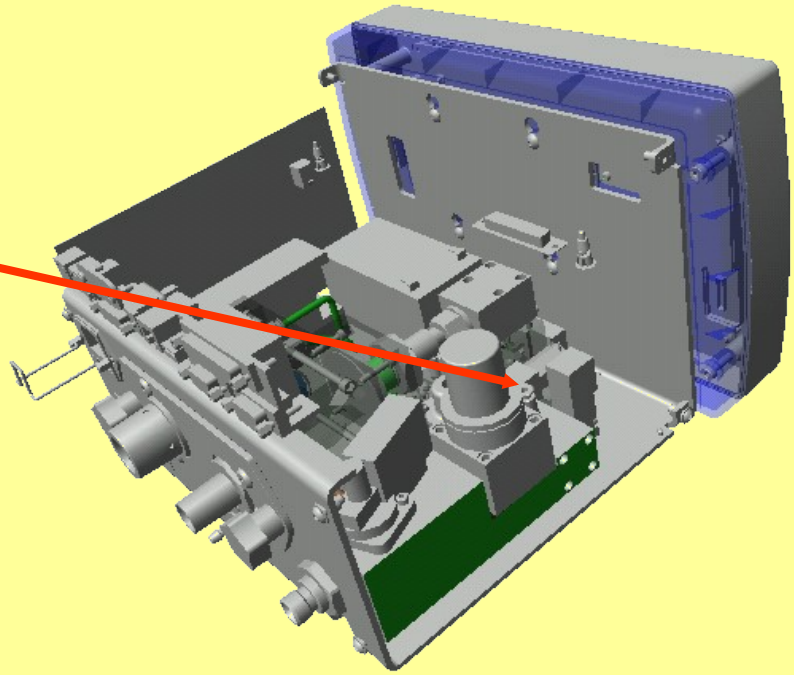

Penlon

Secondary regulator calibration

- Dynamic measurement:
  - Provides 140 cmH_2O on diaphragm with bleed flow.
    - Approximately 2 l/min.
- Connect test manometer into the 4mm test point **2**.
- Set front panel controls to default settings.
- Measure during inspiratory phase:
  - Adjust secondary regulator as necessary to achieve 140 cmH_2O **1**.

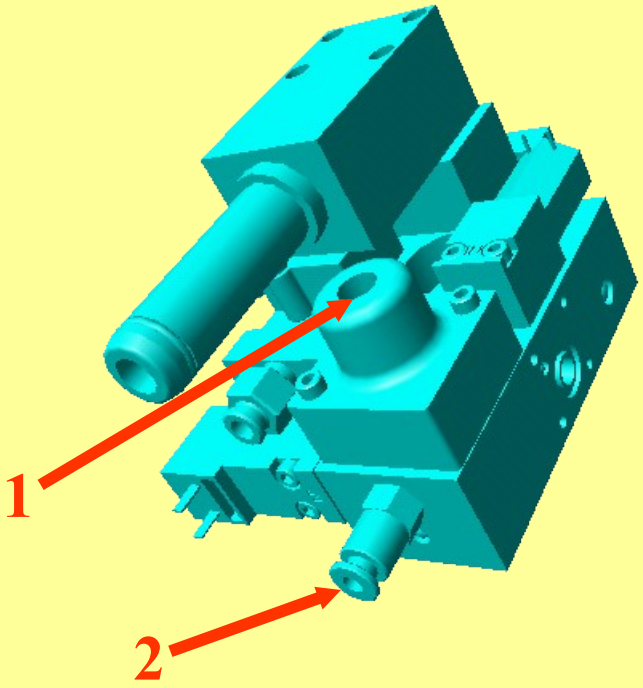

Penlon

Alternative method of Secondary regulator calibration

- Dynamic measurement:
  - Provides 95 cmH_2O on diaphragm with bleed flow.
    - Approximately 2 l/min.
- Remove Patient Block.
- Connect test manometer smallest probe from Pneumatic Control Manifold.
- Set front panel controls to default settings.
- Measure during inspiratory phase:
  - Adjust secondary regulator as necessary to achieve 95 cmH_2O.

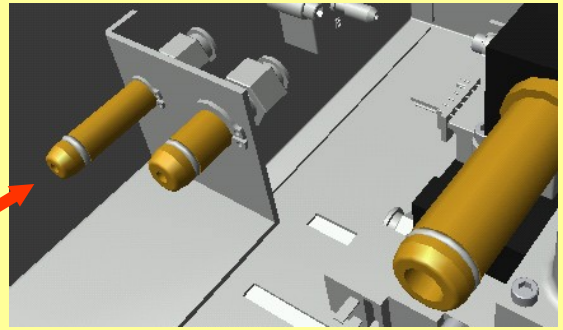

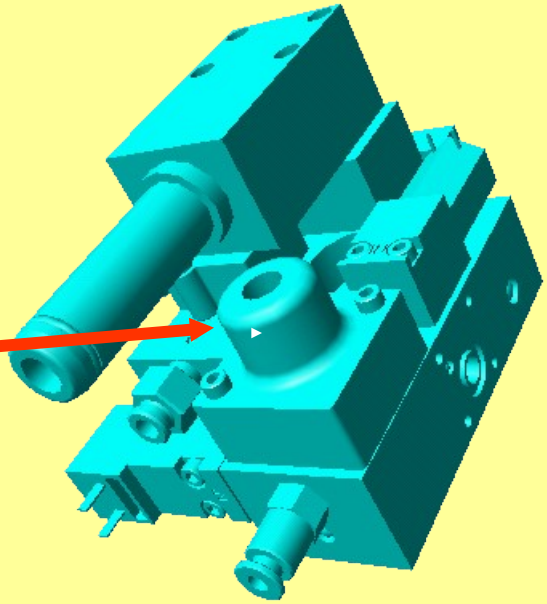

Penlon

Barometric Calibration

- Ensure all tubes disconnected from rear of ventilator.
- In ‘Penlon Options’ menu select ‘Cal Pressure’.
- Adjust to current barometric pressure and confirm.
- Zeros all pressure transducers:
  - Drive Valve.
  - Patient Valve.
  - Patient Airway.
  - Ambient.

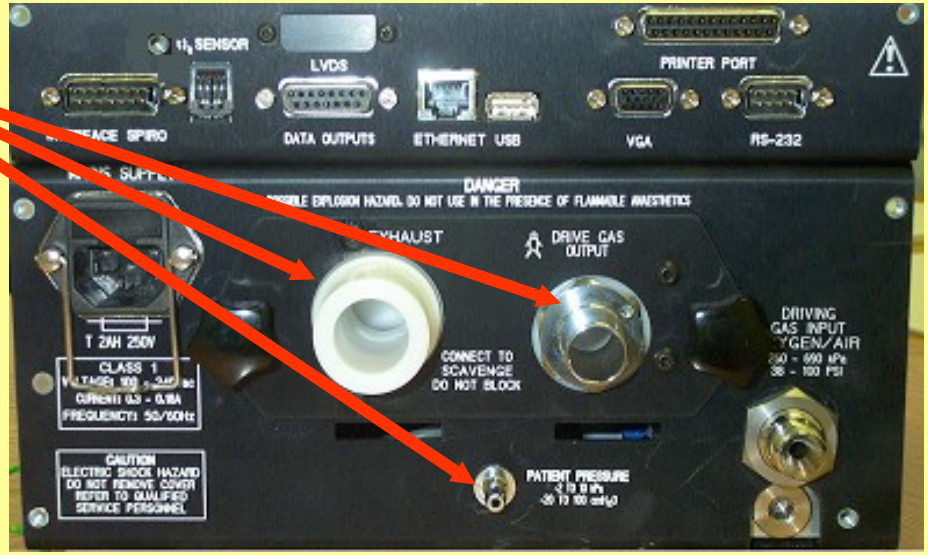

Spirometry zero calibration

- Disconnect fresh gas hose from anaesthesia machine.
- Set bag vent switch to bag and disconnect bag from bag-arm.
- Remove breathing circuit from absorber.
- Select 'SPIRO CALIBRATION:0 L/min' from menu and confirm.
  - Zeros Drive Flow sensor and External Spirometry.
  - In ‘Diagnosis’ menu spiro values should read approx 80mV when zero is good.

Patient valve – Zero and Cal

- Connect ventilator to circle system as for normal use with patient Y-piece occluded.
- Set anaesthesia machine to 5 l/min.
- Select ‘PV Zero‘.
  - Patient valve is slowly opened. As diaphragm is closed circuit pressure will increase by 5 cmH_2O.
  - Lift point of valve measured.
  - Maximum diaphragm pressure 35 cmH_2O.
  - Maximum PWM 500.
- Pressure is incremented in steps up to 50 cmH_2O.

Penlon

Drive valve - Zero

- Fit Patient Block:
  - Disconnect drive gas hose and occlude connector.
- Select ‘DV zero‘ from Cal Valves menu:
  - Patient valve automatically closes.
  - Drive valve PWM slowly incremented until pressure increase detected.

Penlon

Drive valve - Measure

- Connect calibrated flowmeter to Drive gas outlet.
- Select ‘DV Measure’.
  - Drive Valve opens until Drive flow sensor reads 20 l/min.
  - Compare with calibrated flowmeter and adjust with Trim Flow.
  - Adjusting ‘Trim Flow’ down reduces output of flow sensor and so increases output of Drive flow.
  - Adjusting ‘Trim Flow’ up increases output of flow sensor and so decreases output of Drive flow.

Drive Flow Curve Calibration

- Ensure Leak Test is completed successfully.
- Connect ventilator, absorber and breathing circuit with re-breathing bag fitted.
- Remove bellows from canister.
- Select '<Start/Stop Curve Cal>'.
- Bag is filled at 20 l/min:
  - Timed between 5 and 30 cmH_2O.
- Process repeated at higher and lower flow rates:
  - Full curve generation from 2 – 75 l/min.
  - Takes approx 5 minutes.
- **Verify flow and use 'Trim Drive Flow' to adjust.**

Penlon

External Spirometry calibration

- Ensure Drive Flow has been calibrated.
- Disconnect fresh gas hose from anaesthesia machine and connect to Bag arm.
- Close APL valve and set bag vent switch to bag.
- Disconnect Vent Drive hose from rear of absorber and connect to Expiratory port (use Pt no 52036).
- Connect short hose to Inspiratory port.
- Select ‘EXT. SPIRO MENU’ - ‘<Start/Stop Curve Cal>’.
- **Verify spirometry and use ‘Trim Ext. Spiros’ to adjust.**

Any Questions?

The End