Table of Contents Page

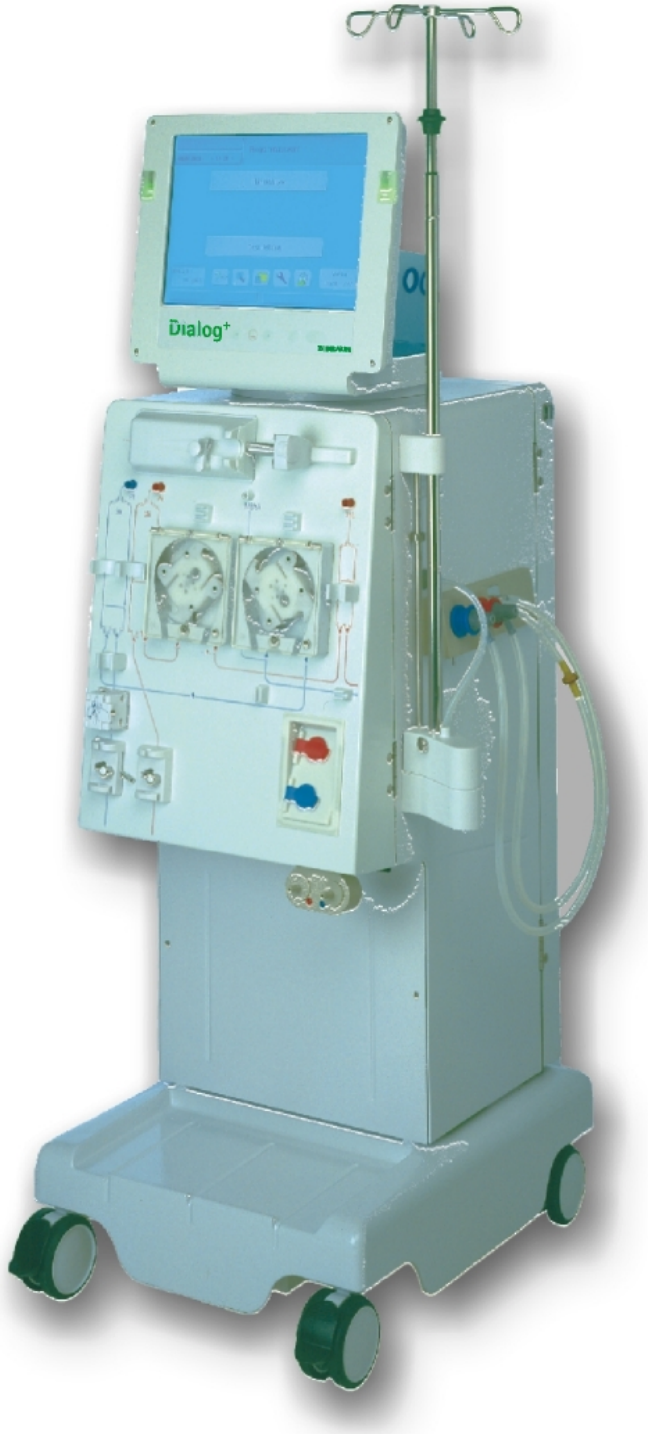

Dialog+

with the options:

- **Double Pump**
- **BIC Cartridge Holder**
- **Central Concentrate Supply**

General Information

Operation is accomplished via a touch screen (TFT monitor). Two microprocessor systems control and monitor the machine.

The hardware concept consists of the following systems:

- Top Level System
- Low Level System

Top Level System

The top level system consists of the following components:

- Communication module
- Top level controller TLC (motherboard)
- Hard disk drive
- Floppy disk drive
- ABPM (option)

The communication between the user and the machine is performed via the top level.

Example data exchange to communication module:

- Entry via input mask of the touch screen or keyboard
- Output via the output mask of the TFT monitor

Example data exchange to low level:

- Transmitting and receiving of data from/to low level controller

Low Level System

The low level system consists of the following components:

- Low level controller LLC
- Supervisor SB
- Power board PB1 and power board PB2

The low level controls and monitors all functions.

Example data exchange to top level controller:

- Transmitting and receiving of data from/to low level controller

Example data exchange low level controller to supervisor:

- Transmitting and receiving messages, data and commands from/to supervisor

All sensors are connected to the processor system via the supervisor board. The actuators, motors and valves are driven via the power boards 1 and 2.

2.1 Overview Sub-Racks

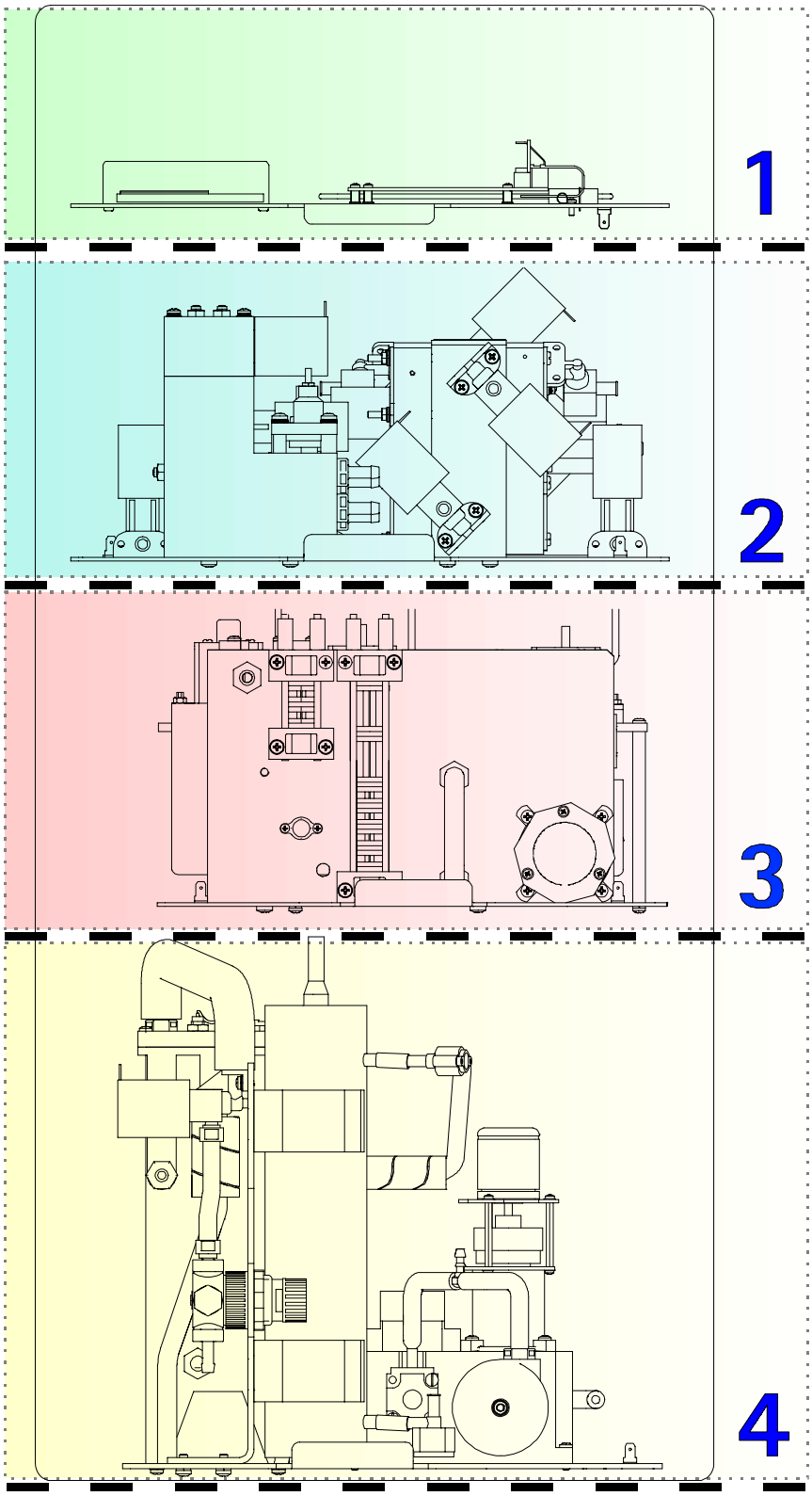

Fig. : Overview Sub-Racks Rear View Dialog+

2.1.1 Legend Overview Sub-Racks

1	Top Level Sub-Rack	**3**	DF Sub-Rack
2	UF Sub-Rack	**4**	Water Inlet Sub-Rack

2.2 Top Level Sub-Rack

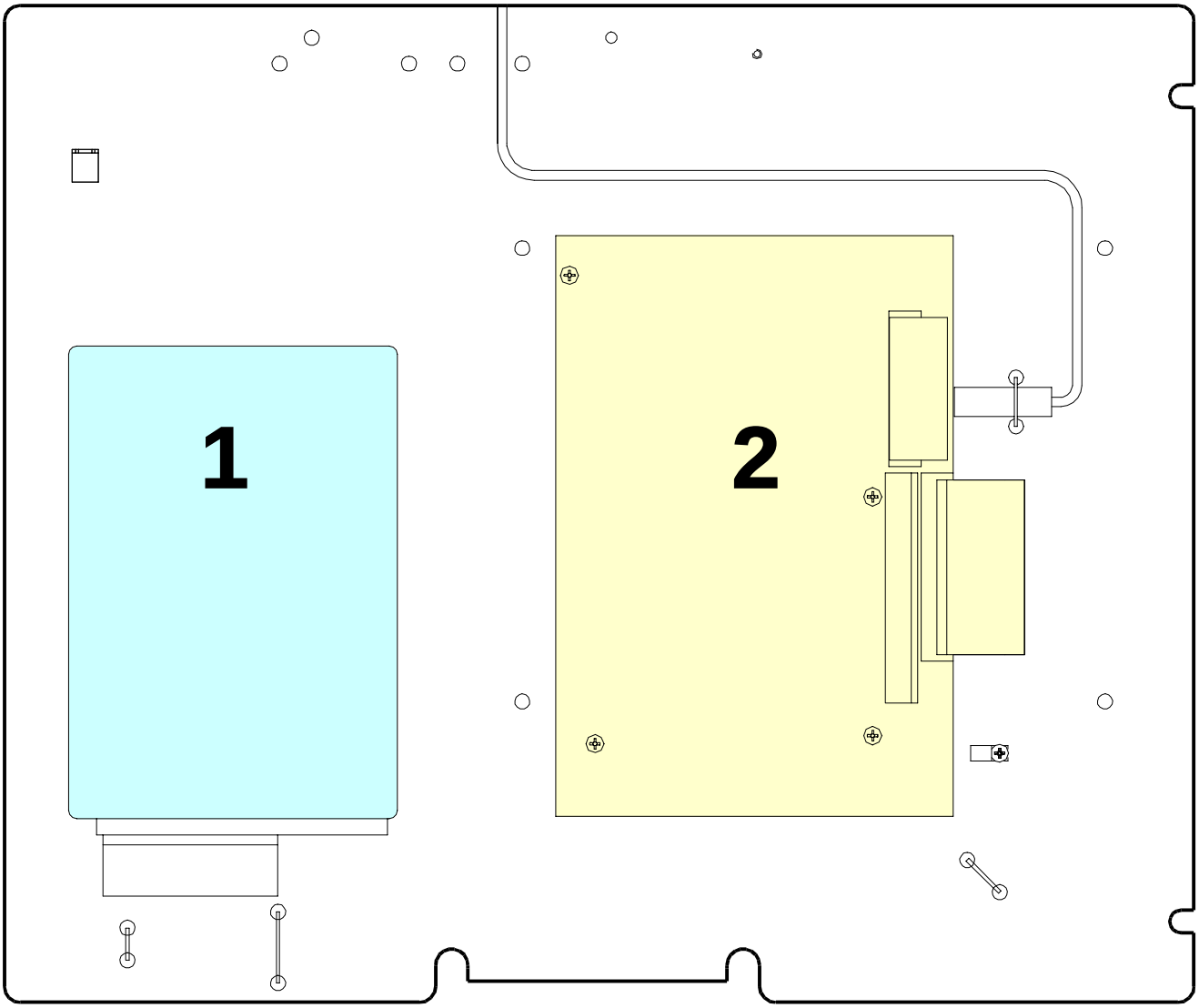

Fig. : Top Level Sub-Rack

2.2.1 Legend Top Level Sub-Rack

1 Hard Disk Drive
2 Motherboard

2.3 UF Sub-Rack

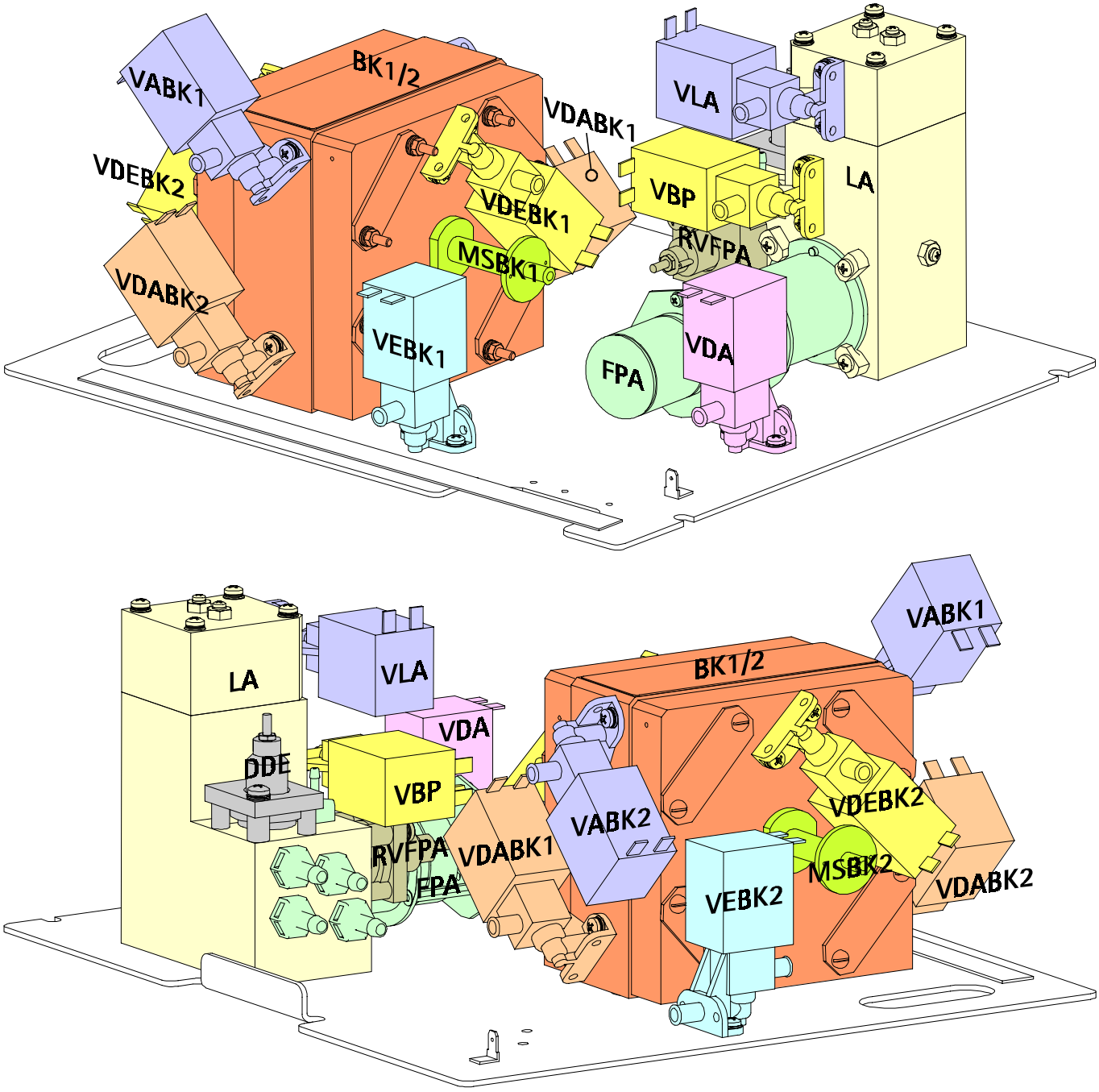

Fig. : UF Sub-Rack

2.3.1 Legend UF Sub-Rack

Air Separator **LA**
Air Separator Valve **VLA**
Balance Chamber **BK1/2**
Bypass Valve **VBP**
Dialyser Inlet Throttle **DDE**
Dialyser Inlet Valve **VDEBK1**
Dialyser Inlet Valve **VDEBK2**
Dialyser Outlet Valve Balance Chamber **VABK1**
Dialyser Outlet Valve Balance Chamber **VABK2**
Dialyser Dialyser Outlet Valve Balance Chamber **VDABK1**
Dialyser Dialyser Outlet Valve Balance Chamber **VDABK2**
Inlet Valve Balance Chamber **VEBK1**
Inlet Valve Balance Chamber **VEBK2**
Membrane Position Sensor Balance Chamber **MSBK1/2**
Outlet Flow Pump **FPA**
Outlet Flow Pump Throttle **RVFPA**

2.4 DF Sub-Rack

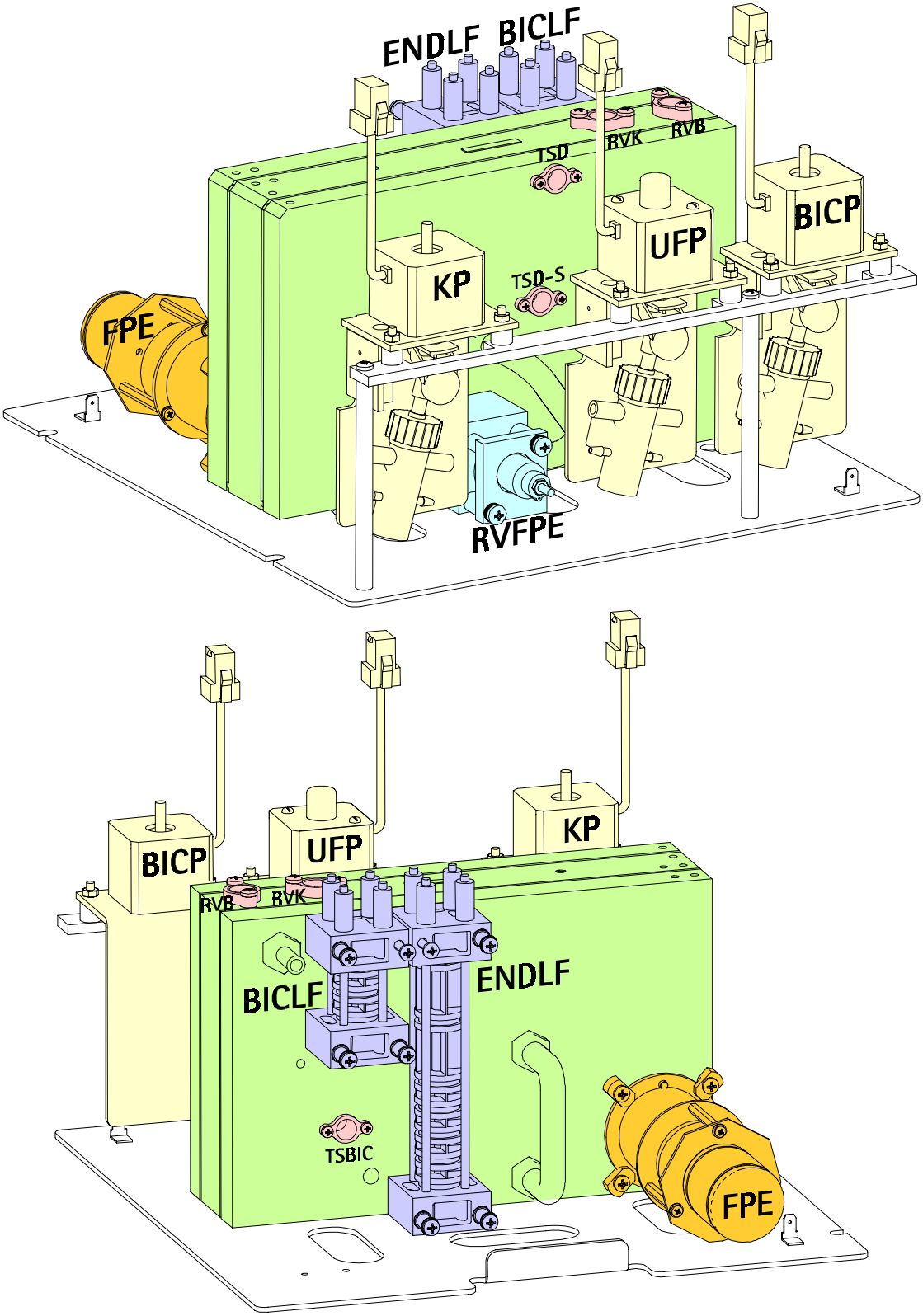

Fig. : DF Sub-Rack

2.4.1 Legend DF Sub-Rack

BIC Pump **BICP**
Bicarbonate Conductivity **BICLF**
Bicarbonate Temperature Sensor **TSBIC**
Bicarbonate Throttle **RVB**
Concentrate Pump **KP**
Concentrate Throttle **RVK**
Degassing Chamber **EK**
Degassing Control Valve **RVE**
Degassing Pressure Sensor **PE**
Degassing Pump **EP**
Dialysate Temperature Sensor Supervisor **TSD-S**
Dialysate Temperature Sensor **TSD**
END Conductivity/Supervisor **ENDLF/ENDLF-S**
Inlet Flow Pump **FPE**
Inlet Flow Pump Throttle **RVFPE**
UF Pump **UFP**

2.5 Water Inlet Sub-Rack

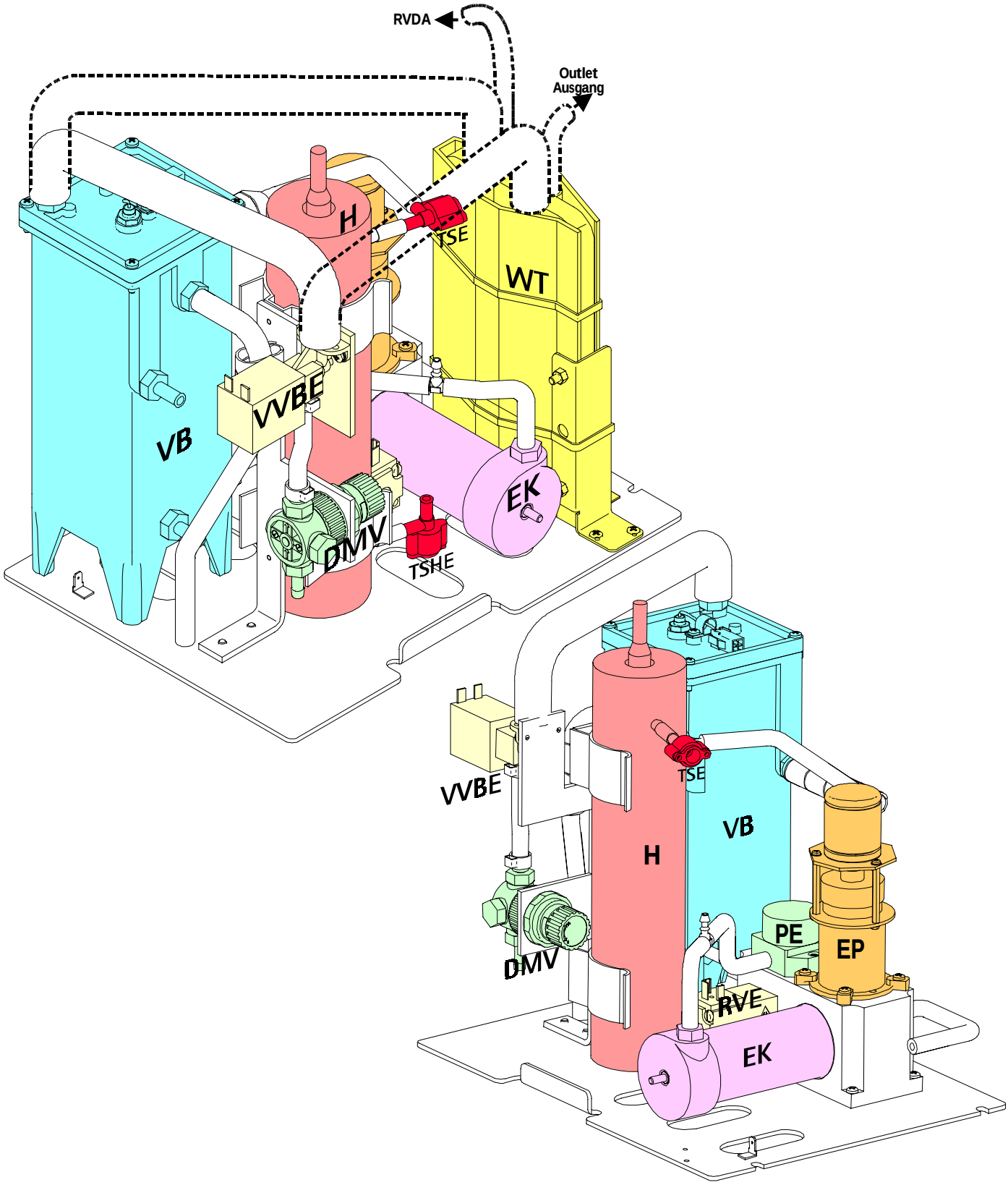

Fig. : Water Inlet Sub-Rack (with and without Heat Exchanger WT Option)

2.5.1 Legend Water Inlet Sub-Rack

Degassing Chamber **EK**
Degassing Control Valve **RVE**
Degassing Pressure Sensor **PE**
Degassing Pump **EP**
Degassing Temperature Sensor **TSE**
Heat Exchanger **WT** (Option)

Heater **H**
Heater Inlet Temperature Sensor **TSHE**
Heater Temperature Sensor **TSH**
Pressure Reducer Valve **DMV**
Upline Tank Inlet Valve **VVBE**
Upline Tank **VB**

2.6 Rinsing Bridge

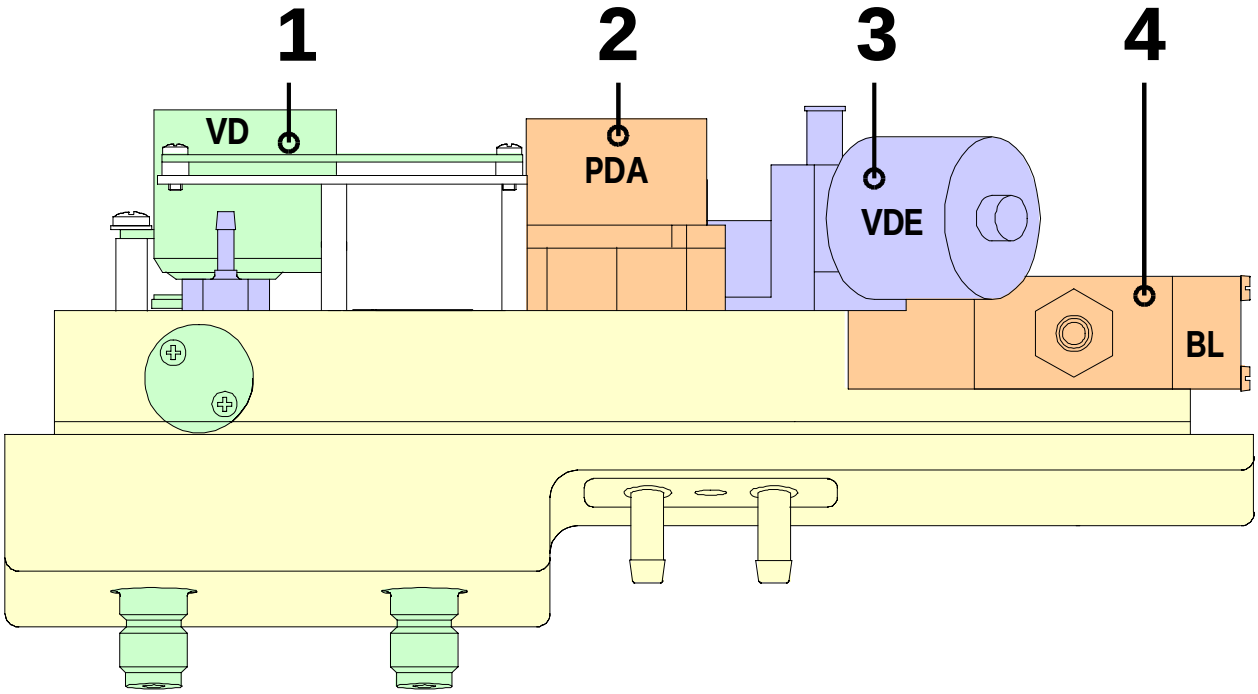

Fig. : Rinsing Bridge

2.6.1 Legend Rinsing Bridge

1 Disinfection Valve **VD**
2 Pressure Sensor Dialysate Outlet **PDA**
3 Dialyser Inlet Valve **VDE**
4 Blood Leak Detector **BL**

2.7 Rear Door

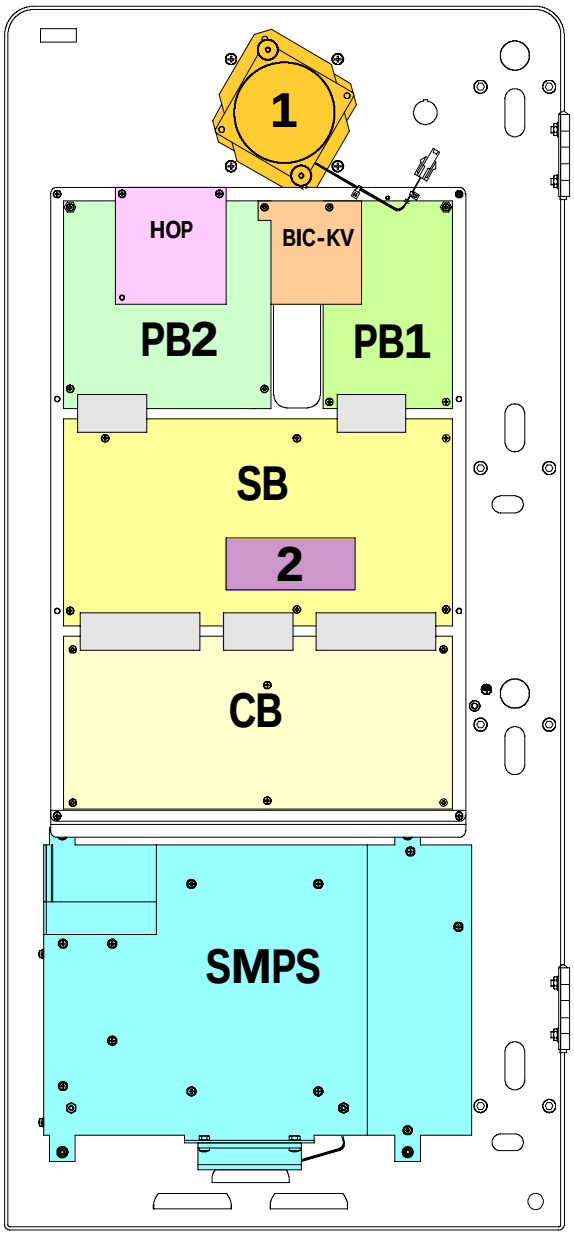

Fig. : Rear Door

2.7.1 Legend Rear Door

BIC Cartridge Holder Board **BIC-KV** (Option)
Controller Board **CB**
HDF Online Power Board **HOP** (Option)
HFS 2 Board **HFS2** with TSHE (Option) (**2**)
Fan (**1**)
Power Board 1 **PB1**
Power Board 2 **PB2**
SAKA Board **SAKA** with TSHE (Option) (**2**)
Switch Mode Power Supply **SMPS**
Supervisor Board **SB**
Heater Inlet Temperature Sensor Board **TSHE** (**2**)

2.8 TFT Monitor

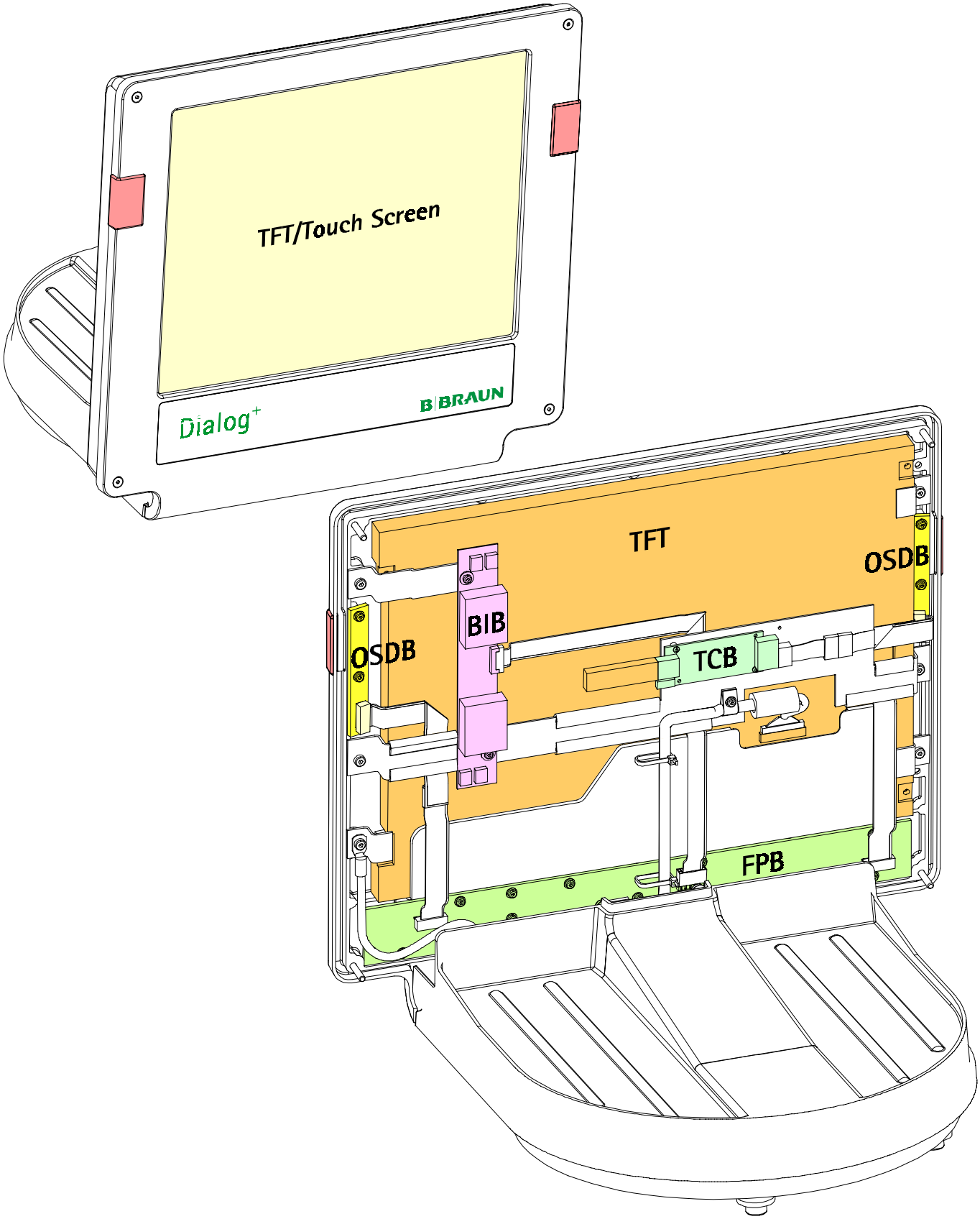

Fig. : TFT Monitor

2.8.1 Legend TFT Monitor

Backlight Inverter Board **BIB**
Front Panel Board **FPB**
TFT Monitor **TFT**
Optical Status Display Board **OSDB**
Touch Controller Board **TCB**
Touch Screen

2.9 Power Board 1 PB1

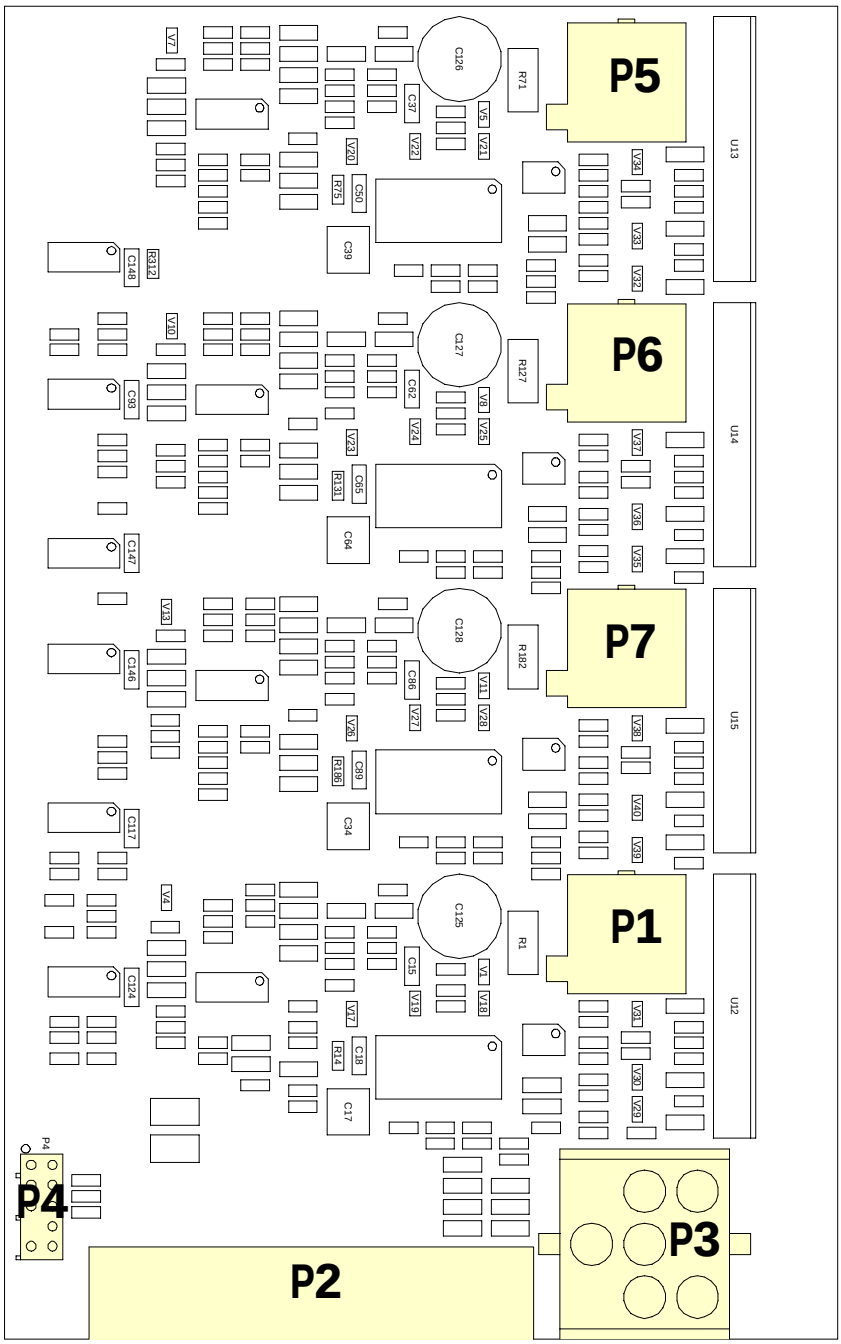

Fig. : Power Board 1 PB1

2.9.1 Legend Power Board 1 PB1

P1 Arterial Blood Pump **BPA**
P2 Supervisor Board **SB**
P3 Voltage Supply
P4 Sensors Blood Pump
Cover switch

P5 Inlet Flow Pump **FPE**
P6 Outlet Flow Pump **FPA**
P7 Degassing Pump **EP**

2.10 Power Board 2 PB2

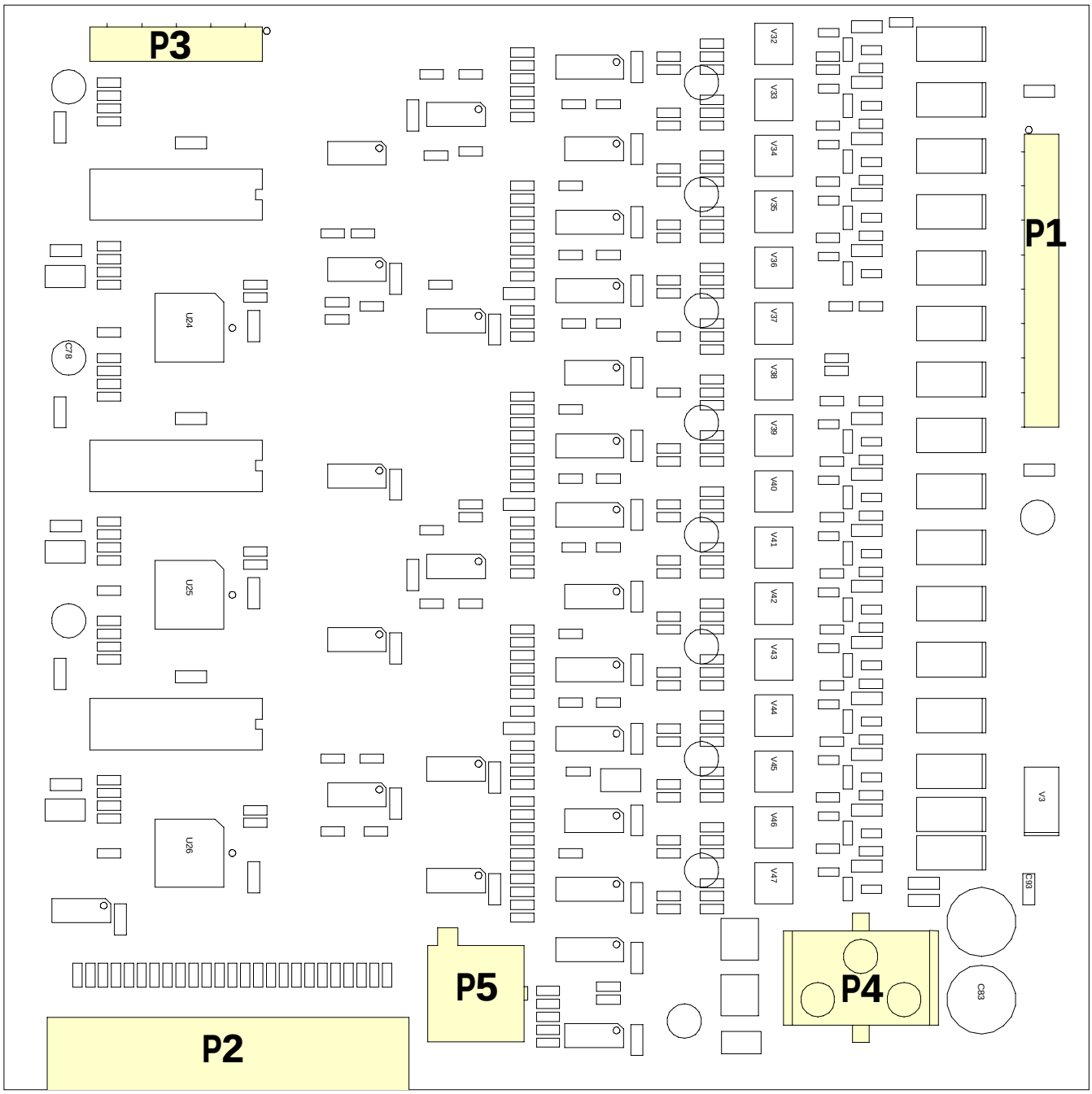

Fig. : Power Board 2 PB2

2.10.1 Legend Power Board 2 PB2

P1 for Valves and SAKV:
Upline Tank Inlet Valve **RVVB**
Degassing Control Valve **RVE**
Venous Tubing Clamp Currentles Closed **SAKV-SG**
Dialyser Outlet Valve **VDA**
Dialyser Inlet Valve **VDE**
Balance Chamber Valves **VABK1/2, VDABK1/2, VEBK1/2, VDEBK1/2**
Air Separator Valve **VLA**
Circulation Valve **VZ**
Bypass Valve **VBP**

P2 Supervisor Board **SB**
P3 Piston Pumps:
Concentrate Pump **KP**,
Bicarbonate Pump **BICP**,
Ultrafiltration Pump **UFP**
P4 Voltage Supply
P5 Disinfection Valve **VD**

2.11 Supervisor Board SB

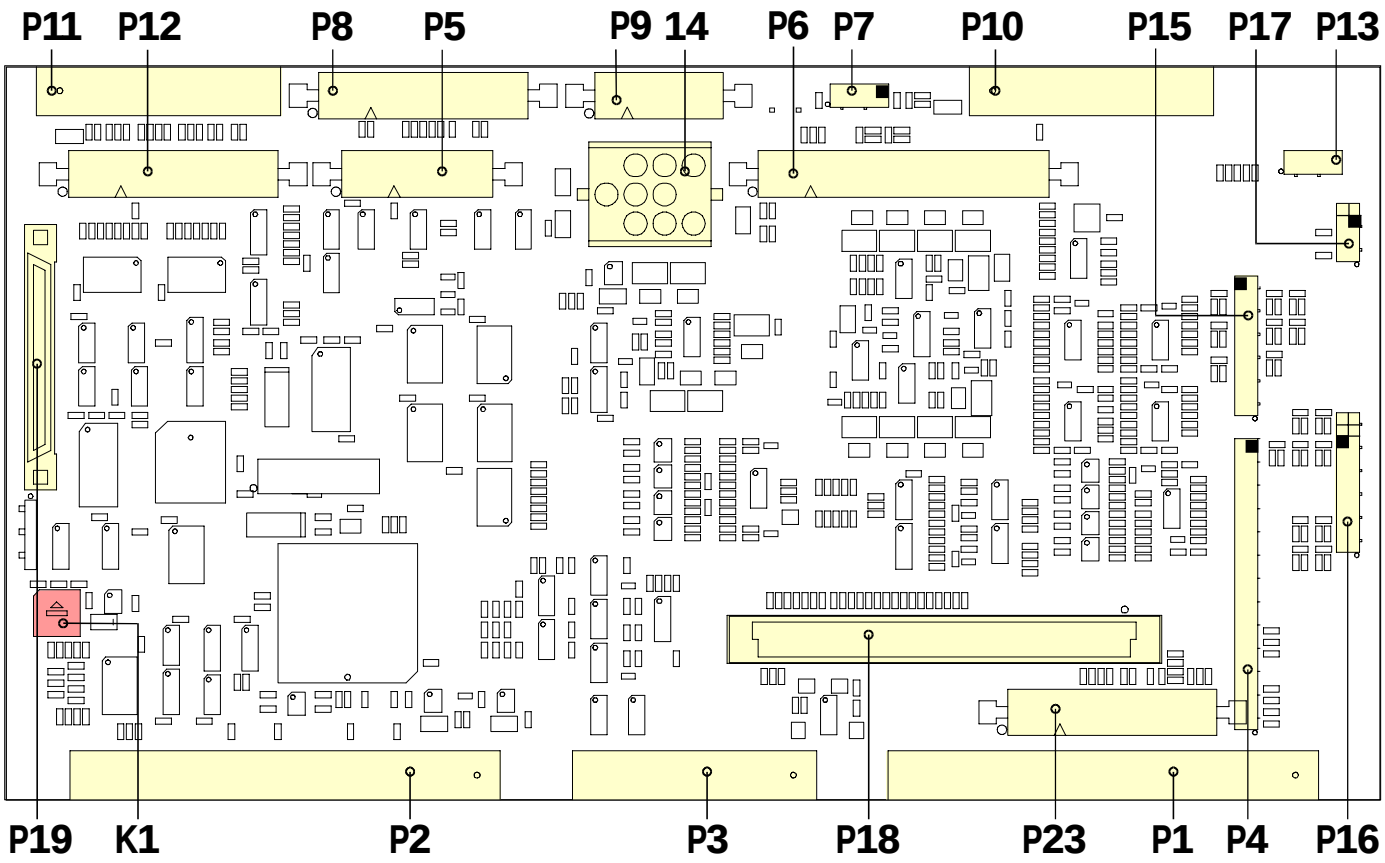

Fig. : Supervisor Board SB

2.11.1 Legend Supervisor Board SB

P1/P2/P3	Controller Board **CB**	**P13**	Pressure Sensor **PBE**
P4	BICSS/KSS/RDVLED/SAD RTS/TX/CTS/RX Signals	**P14**	Voltages +5 V/+24 VL/+24 VGB/+12 VAN/-12 VAN
P5	Staff Call Signals	**P15**	ENDLF/ENDLF-S/BICLF/TSD/TSD-S/TSBIC/TSE Signals
P6	BPV/PBS/SAKA Signals	**P16**	Voltages +5 VREF/+12 VAN/-12 VAN
P7	BL Signals	**P17**	Voltages +5 V/12 VD/-12 VD
P8	REM/HOFF/HREL Signals	**P18**	Extension Connector
P9	SCB-RX/TX/CTS/RTS Signals	**P19**	Communication Program Adapter
P10	BP/EP/FP Signals	**K1**	Hardware Switch:
P11	VVBE/KP/BICP/UFP/SKAV/VDE/VDA Signals		Position 0: Therapy Mode
P12	Heparin Pump Signals		Position 2: TSM Service Program Mode
			Position 3: Software Update Mode

2.12 Controller Board CB

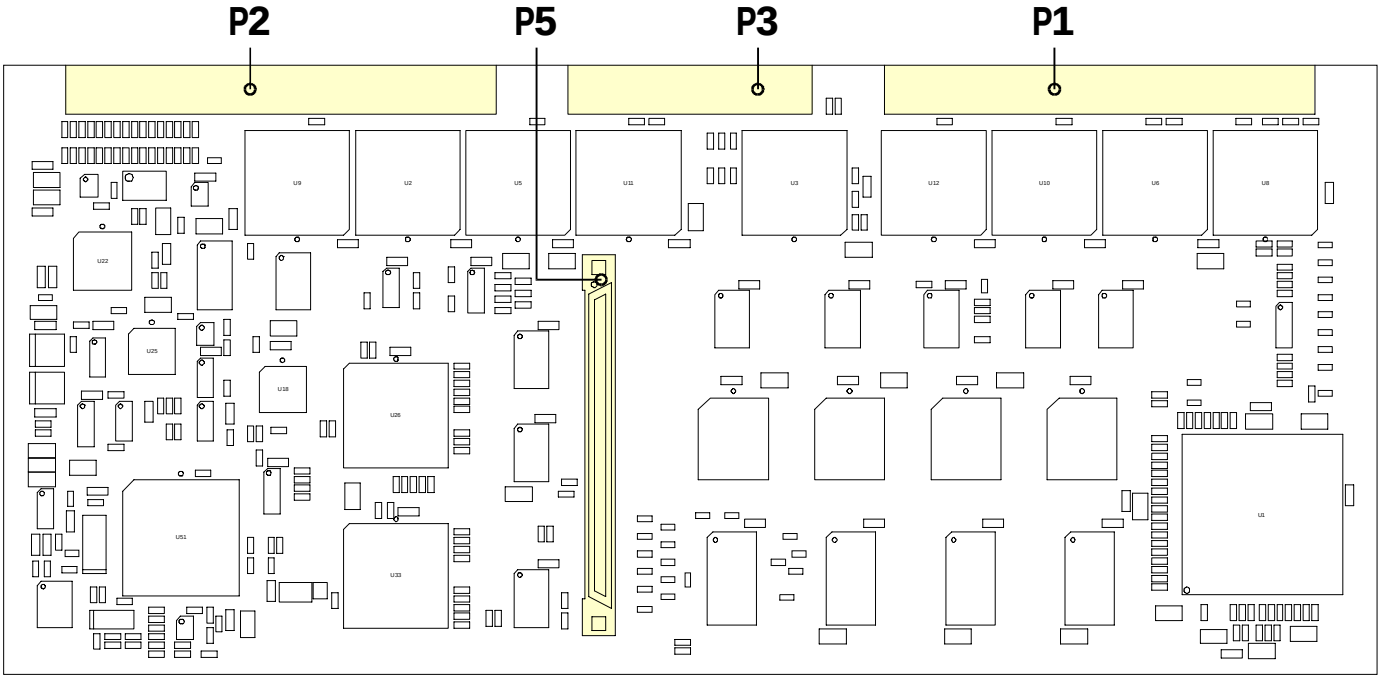

Fig. : Controller Board CB

2.12.1 Legend Controller Board CB

P1/P2/P3 Supervisor Board **SB**

P5 Program Adapter with Memory Card

2.13 Switch Mode Power Supply SMPS (Benning)

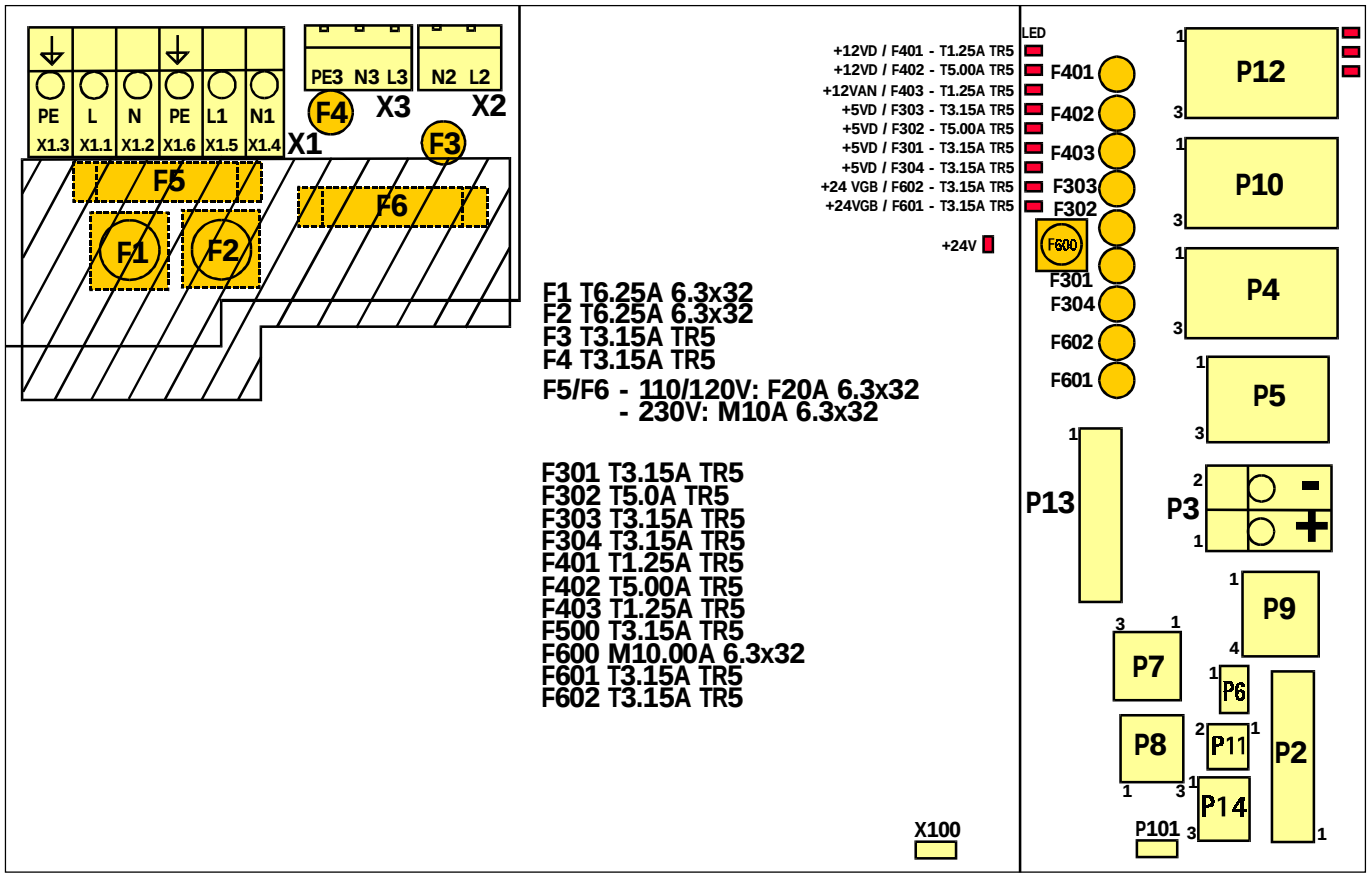

Fig. : Switch Mode Power Supply SMPS (Benning)

2.13.1 Legend Switch Mode Power Supply SMPS

X1	Mains Input, Heater
X2	-
X3	Fluid Warmer (via Relay)
P2	Supervisor/Watchdog, Service Board
P3	Battery Connection (Screw Terminal)
P4	Power Board 1/2
P5	Supervisor/Controller Board
P6	Floppy Disk Drive
P7	Options, Service Board (Service Tool)
P8	ABPM
P9	Fan, Mains Switch
P10	PC
P11	Hard Disk Drive
P12	Options
P13	-
P14	EXT ON
P101	Service Watchdog
X100	Fan

F1/F2	6.25 AT (6.3x32), Mains Input
F3/F4	3.15 AT (TR5), Fluid Warmer + Monitor
F5/F6	10 AM (6.3x32), Heater 1800 W (240 V) 20 AF (6.3x32), Heater 1800 W (110/120 V)
F301	3.15 AT (TR5), +5 VD
F302	5.00 AT (TR5), +5 VD
F303/ F304	3.15 AT (TR5), +5 VD
F401	1.25 AT (TR5), +12 VD
F402	5.00 AT (TR5), +12 VD
F403	1.25 AT (TR5), +12 VAN
F600	10 AM (6.3x32), +24 VL
F601/ F602	3.15 AT (TR5), +24 VGB

2.14 Front Door

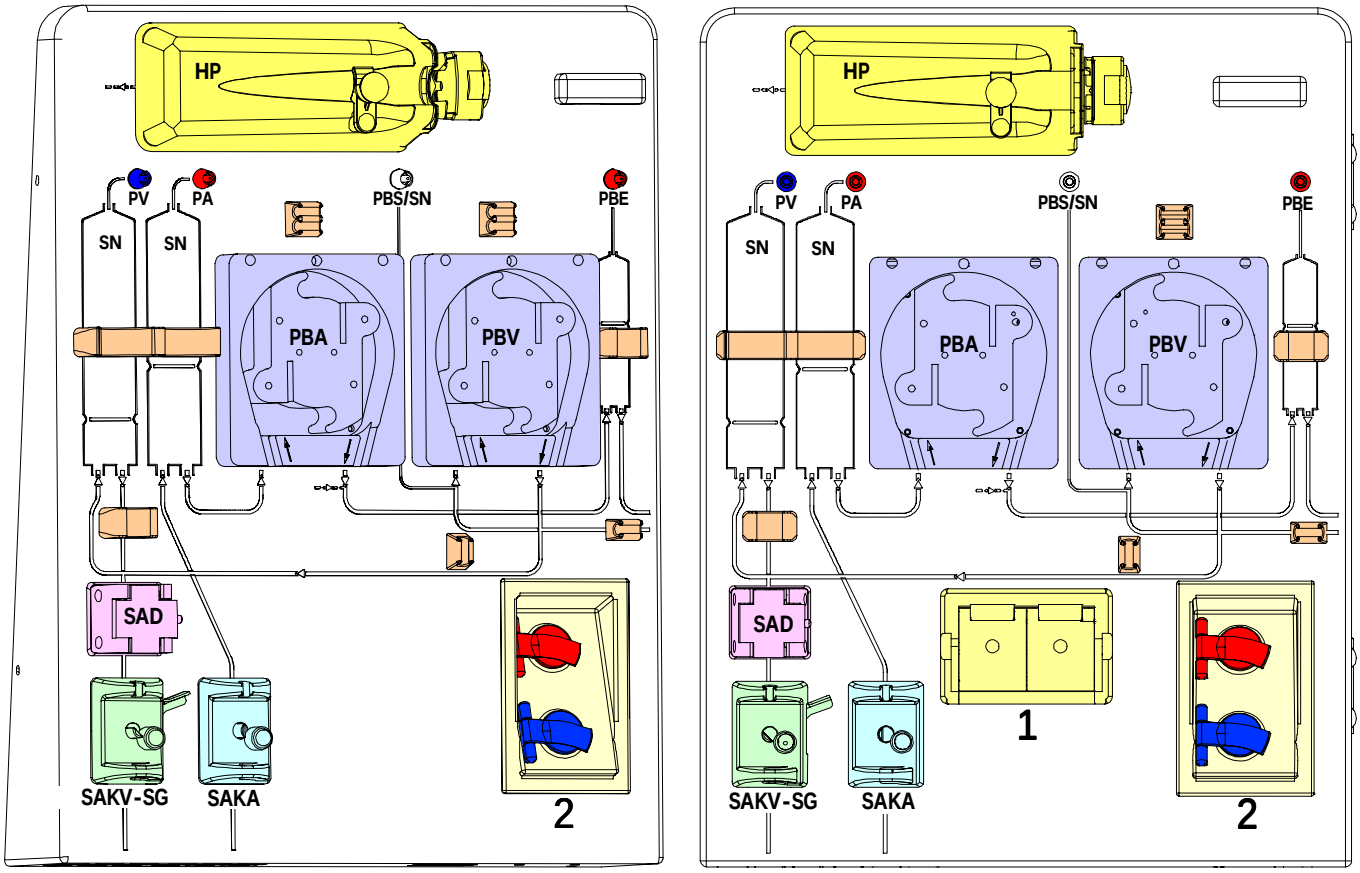

Fig. : Front Door

2.14.1 Legend Front Door

Arterial Blood Pump **BPA**
Arterial Pressure Sensor **PA**
Arterial Tubing Clamp **SAKA-SG**
Cover for Suction Rods **2**
Heparin Pump Compact **HP**
Pressure Sensor **PBE**
Pressure Sensor **PBS/SN**
Safety Air Detector **SAD**/Venous Red Detector **RDV**
Substitution Port **1**
Venous Blood Pump **BPV**
Venous Pressure Sensor **PV**
Venous Tubing Clamp Currentles Closed **SAKV-SG**

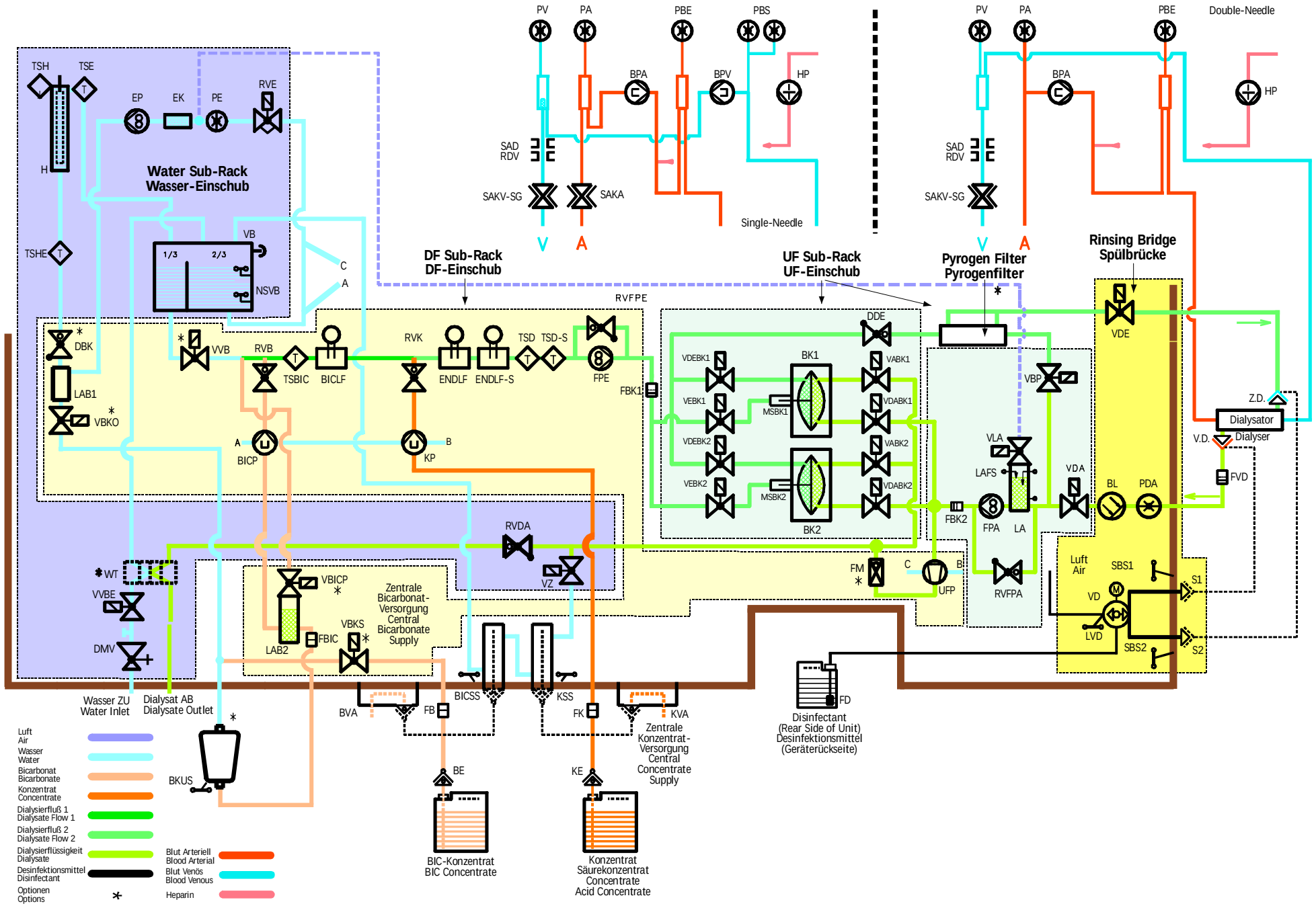
Water Sub-Rack
Wasser-Einschub
TSH
TSE
EP
EK
PE
RVE
H
TSHE
VB
1/3
2/3
NSVB
C
A
DBK
LAB1
VBKO
VVB
RVB
TSBIC
BICLF
RVK
ENDLF
ENDLF-S
TSD
TSD-S
RVFPE
FPE
FBK1
BICP
KP
DF Sub-Rack
DF-Einschub
UF Sub-Rack
UF-Einschub
PV
PA
PBE
PBS
BPA
BPV
HP
SAD
RDV
SAKV-SG
SAKA
Single-Needle
Double-Needle
Pyrogen Filter
Pyrogenfilter
Rinsing Bridge
Spülbrücke
VDE
DDE
VDEBK1
VEBK1
VDEBK2
VEBK2
BK1
BK2
MSBK1
MSBK2
VABK1
VDABK1
VABK2
VDABK2
VBP
VLA
LAFS
FPA
LA
VDA
FBK2
BL
PDA
Z.D.
Dialysator
Dialyser
V.D.
FVD
RVDA
VZ
WT
VVBE
DMV
VBICP
LAB2
FBIC
VBKS
Zentrale
Bicarbonat-
Versorgung
Central
Bicarbonate
Supply
FM
UFP
RVFPA
Luft
Air
SBS1
S1
VD
LVD
SBS2
S2
Wasser ZU
Water Inlet
Dialysat AB
Dialysate Outlet
BKUS
BVA
FB
BICSS
KSS
FK
KVA
Zentrale
Konzentrat-
Versorgung
Central
Concentrate
Supply
FD
Disinfectant
(Rear Side of Unit)
Desinfektionsmittel
(Geräterückseite)
BE
BIC-Konzentrat
BIC Concentrate
KE
Konzentrat
Säurekonzentrat
Concentrate
Acid Concentrate
Luft
Air
Wasser
Water
Bicarbonat
Bicarbonate
Konzentrat
Concentrate
Dialysierfluß 1
Dialysate Flow 1
Dialysierfluß 2
Dialysate Flow 2
Dialysierflüssigkeit
Dialysate
Desinfektionsmittel
Disinfectant
Optionen
Options
Blut Arteriell
Blood Arterial
Blut Venös
Blood Venous
Heparin

2.15.1 Legend Flow Diagram

Abbreviation	Description
BE	Bicarbonate Withdrawal Rod
BICLF	Bicarbonate Conductivity
BICP	Bicarbonate Pump
BICSS	Bicarbonate Rinsing Connection Sensor
BK1	Balance Chamber 1
BK2	Balance Chamber 2
BL	Blood Leak Detector
BPA	Arterial Blood Pump
BPV	Venous Blood Pump
BVA	Bicarbonate Supply Connection (Central Supply)
DBK	Throttle Bicarbonate Cartridge Holder
DDE	Throttle Dialyser Inlet
DMV	Pressure Reducer Valve
EK	Degassing Chamber
ENDLF	END Conductivity
ENDLF-S	END Conductivity Supervisor
EP	Degassing Pump
FB	Filter Bicarbonate
FBIC	Filter Bicarbonate Cartridge
FBK1	Filter Balance Chamber 1
FBK2	Filter Balance Chamber 2
FK	Filter Concentrate
FM	Flowmeter
FPA	Outlet Flow Pump
FPE	Inlet Flow Pump
FVD	Filter from Dialysate
H	Heater
HP	Heparin Syringe Pump
KE	Concentrate Withdrawal Rod
KP	Concentrate Pump
KSS	Concentrate Rinsing Connector Sensor
KVA	Concentrate Supply Connector (Central Supply)
LA	Air Separator
LAB1	Air Separator BIC Cartrige Holder 1
LAB2	Air Separator BIC Cartrige Holder 2
LAFS	Air Separator Level Sensors
LVD	Light Barrier Disinfection Valve
MSBK1	Membrane Position Sensor Balance Chamber 1
MSBK2	Membrane Position Sensor Balance Chamber 2
NSVB	Level Sensor Upline Tank
PA	Arterial Pressure Sensor
PBE	Pressure Sensor Blood Inlet
PBS	Blood Pressure Control Sensor
PDA	Pressure Sensor Dialysate Outlet
PE	Degassing Pressure Sensor
PV	Venous Pressure Sensor

RDV	Venous Red Detector
RVB	Throttle Bicarbonate
RVDA	Throttle Dialysate Valve
RVE	Degassing Control Valve
RVFPA	Throttle Flow Pump Outlet
RVFPE	Throttle Flow Pump Inlet
RVK	Throttle Concentrate
RVUF	Throttle Ultrafiltration
SAD	Safety Air Detector
SAKA	Arterial Tubing Clamp
SAKV-SD	Venous Tubing Clamp Currentles Closed
SBS1	Rinsing Bridge Connector Sensor 1
SBS2	Rinsing Bridge Connector Sensor 2
TSBIC	Bicarbonate Temperature Sensor
TSD	Dialysate Temperature Sensor
TSD-S	Dialysate Temperature Sensor Supervisor
TSE	Degassing Temperarture Sensor
TSH	Thermal Fuse Heater Element
TSHE	Heater Inlet Temperature Sensor
UFP	Ultrafiltration Pump
VABK1	Outlet Valve Balance Chamber 1
VABK2	Outlet Valve Balance Chamber 2
VB	Upline Tank
VBICP	Bicarbonate Pump Valve
VBKO	Bicarbonate Cartridge Holder Top Valve
VBKS	Bicarbonate Cartridge Holder Concentrate Rod Valve
VBP	Bypass Valve
V.D.	Dialyser Coupling (from Dialysate)
VD	Disinfection Valve
VDA	Dialyser Outlet Valve
VDABK1	Dialyser Outlet Valve Balance Chamber 1
VDABK2	Dialyser Outlet Valve Balance Chamber 2
VDE	Dialyser Inlet Valve
VDEBK1	Dialyser Inlet Valve Balance Chamber 1
VDEBK2	Dialyser Inlet Valve Balance Chamber 2
VEBK1	Inlet Valve Balance Chamber 1
VEBK2	Inlet Valve Balance Chamber 2
VLA	Air Separator Valve
VVB	Upline Tank Valve
VVBE	Upline Tank Inlet Valve
VZ	Circulation Valve
WT	Heat Exchanger
Z.D.	Dialyser Coupling (to Dialysate)

2.16 Description Flow Diagram

The flow diagram can be divided into six sections:

- Water Inlet Section with Upline Tank
- Degassing Circuit with Temperature System
- Dialysate Processing
- Balance Chamber
- Ultrafiltration
- Rinsing Bridge

2.16.1 Water Inlet Section with Upline Tank

The water inlet section has the following components

- Pressure Reducer Valve **DMV**
- Upline Tank Inlet Valve **VVBE** (2/2 way valve)
- Upline Tank **VB**
- Level Sensors Upline Tank **NSVB**
- Heat Exchanger **WT** (Option)

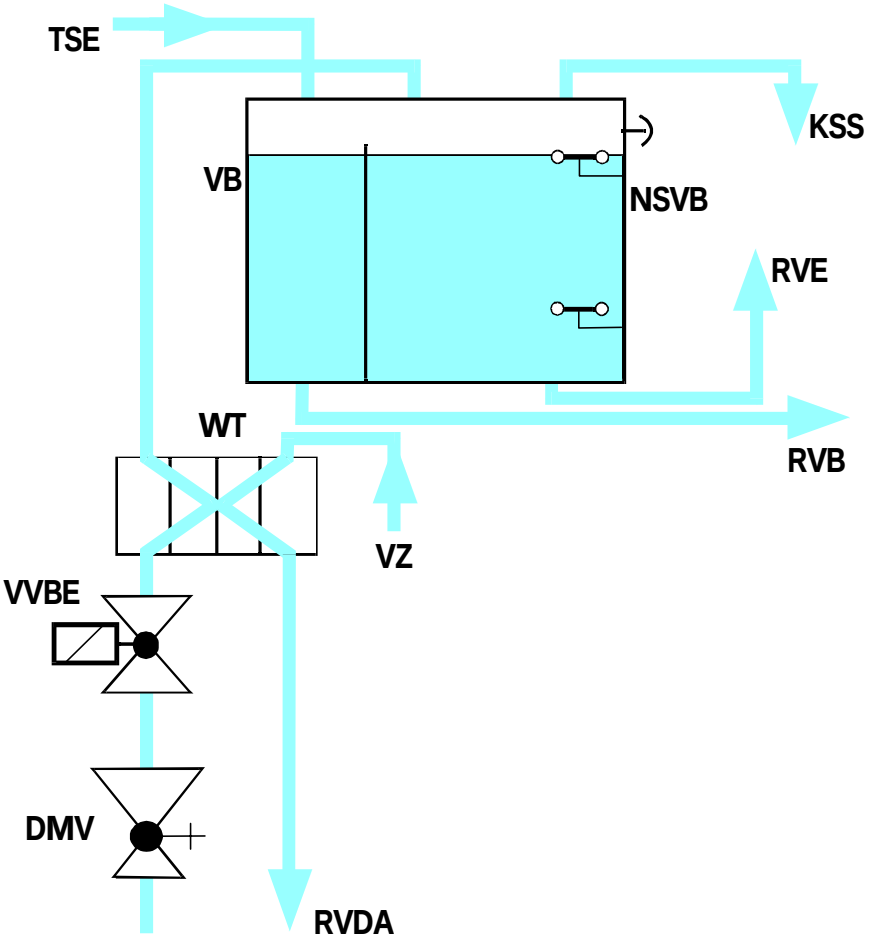

Fig. : Water Inlet with Upline Tank

Pressure Reducer Valve DMV

The pressure reducer valve DMV limits the pressure of the inlet water (e.g. osmosis water) to a maximum of approx. 1.3 bar.

Upline Tank Inlet Valve VVBE

The valve VVBE is time-delayed controlled via the level sensor NSVB (top) in the upline tank VB. The delay time depends on the dialysate flow.

Level Sensors Upline Tank NSVB

The level sensors are mounted in the upline tank.

NSVB top:

closed - VVBE is closed

NSVB bottom (monitoring low water level):

closed (alarm) - Water inlet is disturbed
- Heater is switched off

Heat Exchanger WT (Option)

The cold inlet water can be warmed up via the optional heat exchanger WT. Thereby the heat consumption to heat up the water can be reduced.

2.16.2 Degassing Circuit with Temperature System

The degassing circuit with temperature system has the following components:

- Degassing Control Valve **RVE**
- Degassing Pressure Sensor **PE**
- Degassing Chamber **EK**
- Degassing Pump **EP**
- Thermal Fuse Heater Element **TSH**
- Temperature Sensor Heater Inlet **TSHE**
- Heater Element **H**
- Degassing Temperature Sensor **TSE**

Degassing Control Valve RVE
Degassing Pressure Sensor PE
Degassing Pump EP

The control valve RVE, pressure sensor PE, degassing chamber EK and degassing pump EP produce and measure a negative pressure respectively. The negative pressure is produced to separate the dissolved gas from the water.

The control valve RVE reduces the flow (throttle principle) depending on the measured pressure at the pressure sensor PE. Thereby the desired negative pressure is gained between the control valve RVE and the degassing pump EP. The value of the negative pressure is approx. -500 mmHg and thus always higher than the lower pressure of the dialysate behind the dialyser. The degassing pump works with constant speed, which is determined by the dialysate, unless the negative pressure is insufficient at the smallest opening of RVE. Then the speed of EP is increased.

Heater Element H
Thermal Fuse Heater Element TSH
Degassing Temperature Sensor TSE

The heater H has an integrated thermal fuse TSH as a thermal cut-off. The temperature sensor TSE measures the actual temperature posterior to the heater.

Temperature Control

The temperature of the water inlet determines the amount of heat which the heater must supply, to replace the amount of heat (dialysate flow and dialysate temperature) withdrawn by the drainage.

The differential temperature between the heater inlet (TSHE) and the heater outlet (TSE) determines the controlled variable for the heater, depending on the dialysate flow and dialysate temperature.

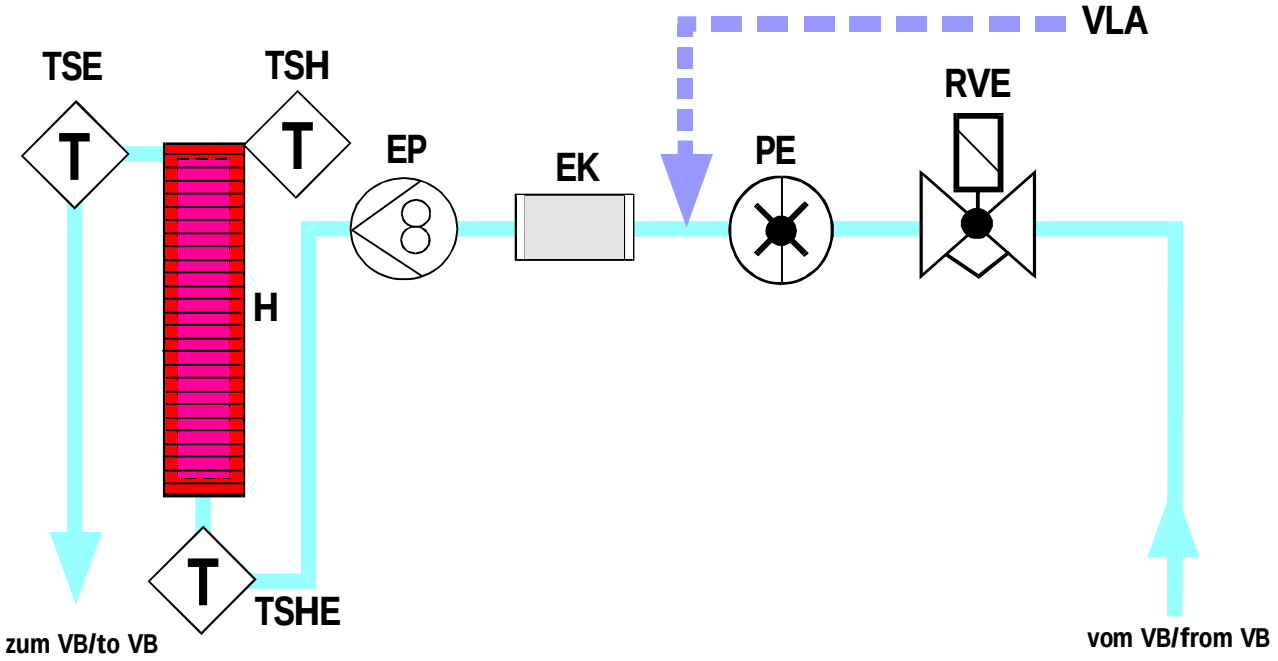

Fig. : Degassing Circuit with Temperature System

2.16.3 Dialysate Processing

The dialysate processing has the following components:

- Bicarbonate Concentrate Pump **BICP**
- Bicarbonate Throttle **RVB**
- Bicarbonate Temperature Sensor **TSBIC**
- Bicarbonate Conductivity **BICLF**
- Concentrate Pump **KP**
- Concentrate Throttle **RVK**
- END Conductivity **ENDLF**
- END Conductivity Supervisor **ENDLFS**
- Dialysate Temperature Sensor **TSD**
- Dialysate Temperature Sensor Supervisor **TSDS**
- Inlet Flow Pump **FPE**
- Inlet Flow Pump Throttle **RVFPE**

The main components of the dialysate preparation are the bicarbonate concentrate pump BICP and the concentrate pump KP, with the conductivity cells BICLF and ENDLF and a flow pump FPE. The flow pump FPE delivers the dialysate. The bicarbonate concentrate, which is added via the bicarbonate pump BICP, is measured by the conductivity measurement cell BICLF. Thereby the pump can control the given conductivity set-point value.

The concentrate or acid concentrate addition has the same working principle. The nonreturn valves RVB and RVK stablise the dosage of the bicarbonate and concentrate.

The temperature sensors TSBIC and TSD are responsible for:

- the temperature compensation of the conductivity measurement and
- temperature measurement TSD after the addition of cold concentrate (second measurement sensor for temperature system) and thus compensation of temperature loss.

The conductivity sensor ENDLFS is an independent monitoring unit (supervisor). The geometry of the ENDLFS sensor is different (but has the same cell constant) than the ENDLF sensor of the controller. Thereby a deposit on the sensor can be identified. The temperature compensation is carried out by the temperature sensor TSDS. The temperature sensor additionally monitors the dialysate flow temperature for the supervisor. The ENDLFS and TSDS sensors have no influence on the respective control.

The throttle RVFPE prevents a high pressure build-up and thus a bursting of tubing if the flow path is blocked behind FPE. If the set pressure is reached RVFPE is opened and the fluid can circulate.

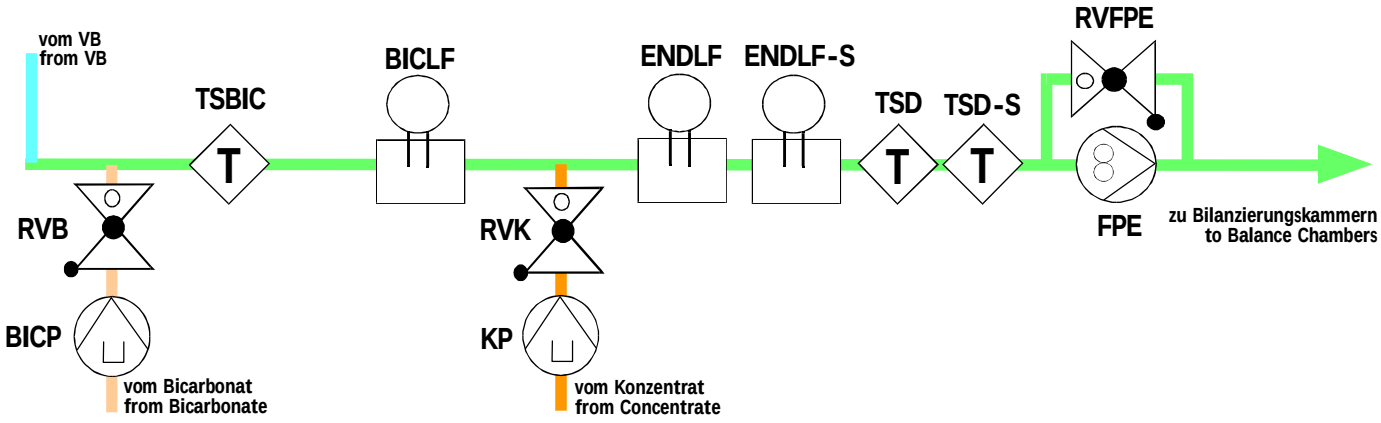

Fig. : Dialysate Processing

2.16.4 Central Bicarbonate and Concentrate Supply

A canister or central supply can be selected via the bicarbonate and concentrate supply connetion BVA and KVA. The supply connection is an option.

The flow pump FPE guarantees a continuous control of the desired dialysate flow into the balance chambers.

The flow rate is determined by the filling time of the balance chamber. The flow pump FPE is controlled via the predetermined volume of the chamber and a continuous detection of the position of the membrane.

2.16.5 BIC Cartridge Holder

DBK **Throttle Bicarbonate Cartridge Holder**
DBK ensures a constant pressure (approx. 200 mmHg) during the filling of the bicarbonate cartridge.

LAB1 **Air Separator BIC Cartrige Holder 1**
LAB1 ensures that only fluid can enter the bicarbonate cartridge.

VBKO **Bicarbonate Cartridge Holder Top Valve**
The bicarbonate cartridge is filled to the limit presure (200 mmHg) after VBKO opens.

VBKS **Bicarbonate Cartridge Holder Concentrate Rod Valve**
The bicarbonate cartridge is vented during preparation and in therapy, i.e. VBKO closes and VBKS opens for a short time. This is repeated in regular intervals during threapy. VBKS is opened after the end of the therapy to empty the bicarbonate cartridge.

VBICP **Bicarbonate Pump Valve**
If VBICP is opened the liquid level in LAB2 is increased. VBICP switches the BIC pump in bypass after the end of the therapy to empty the bicarbonate cartridge.

LAB2 **Air Separator BIC Cartrige Holder 2**
LAB2 serves as a buffer chamber for the bicarbonate cartridge (and canister) to prevent conductivity malfunctions/deviations during therapy.

VVB **Upline Tank Valve**
VVB cuts off the main flow after the end of the therapy to empty the bicarbonate cartridge via FPE (VBICP and VBKS are opened).

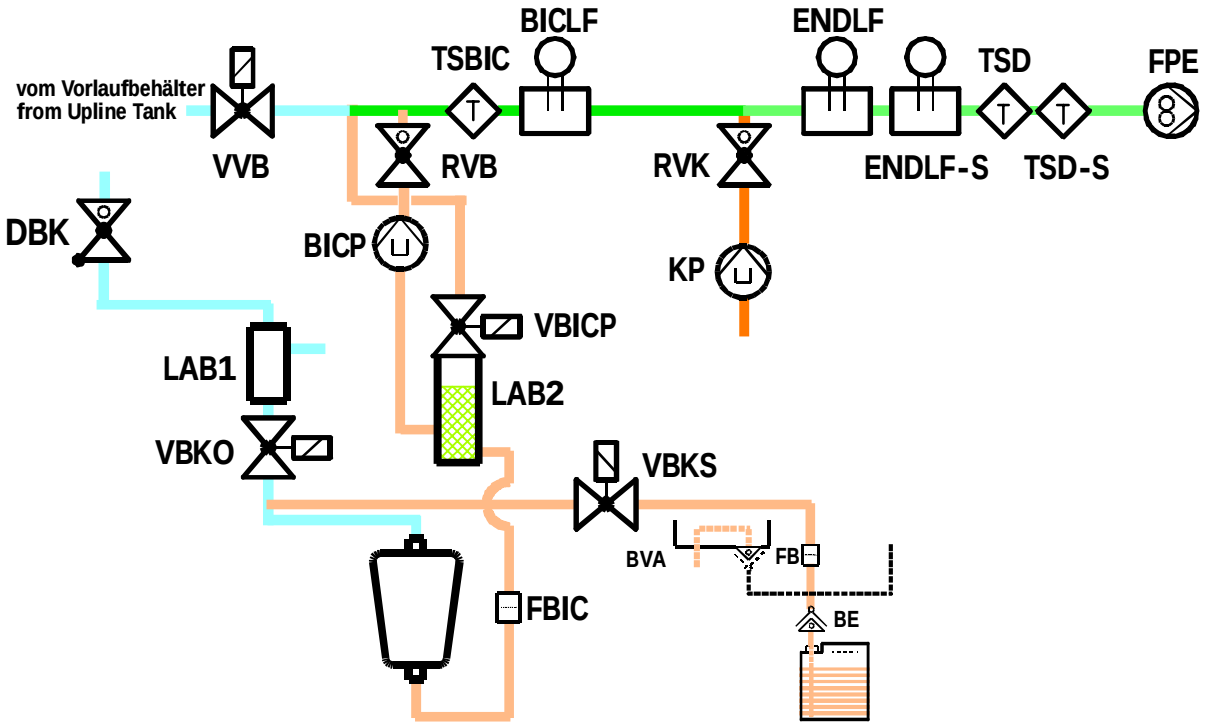

Fig. : BIC Cartridge Holder (Option)

2.16.6 Balance Chamber System

The balance chamber system has the following components:

- Balance Chamber **BK1**
- Balance Chamber **BK2**
- Balance Chamber Dialyser Inlet Valve **VDEBK1** and **VDEBK2**
- Balance Chamber Inlet Valve **VEBK1** and **VEBK2**
- Balance Chamber Membrane Position Sensor **MSBK1** and **MSBK2**
- Balance Chamber Dialyser Outlet Valve **VDABK1** and **VDABK2**
- Balance Chamber Outlet Valve **VABK1** and **VABK2**

The measurement and control of the ultrafiltration rate is accomplished by the double balance chamber system and the ultrafiltration pump UFP.

Both balance chambers BK1 and BK2 are identical. The chambers have flexible membranes, which can be moved to both sides. The membranes devide the chambers into two sub-compartments. The flow direction is defined by the membranes and the eight solenoid valves. The position of the membranes is measured by inductive membrane position sensors MSBK1 and MSBK2. The membrane position sensors (ferrites) are connected to the membranes and each move in a respective coil MSBK1 and MSBK2.

2.16.7 Working Principle Balance Chamber System

Phase 1: The balance chamber BK1 is filled with dialysate at the beginning of phase 1. The membrane is in right position. The valves VDEBK1 and VDABK1 are opened. The balance chamber BK1 is filled by the outlet flow pump FPA, via valve VDABK1. Simultaneously the dialysate is removed from the balance chamber BK1 via valve VDEBK1. Phase 1 is completed and the membrane is in left position (see figure).

The balance chamber BK2 is filled with fresh dialysate during this period. The used dialysate from the previous phase 2 is drained (see description phase 2).

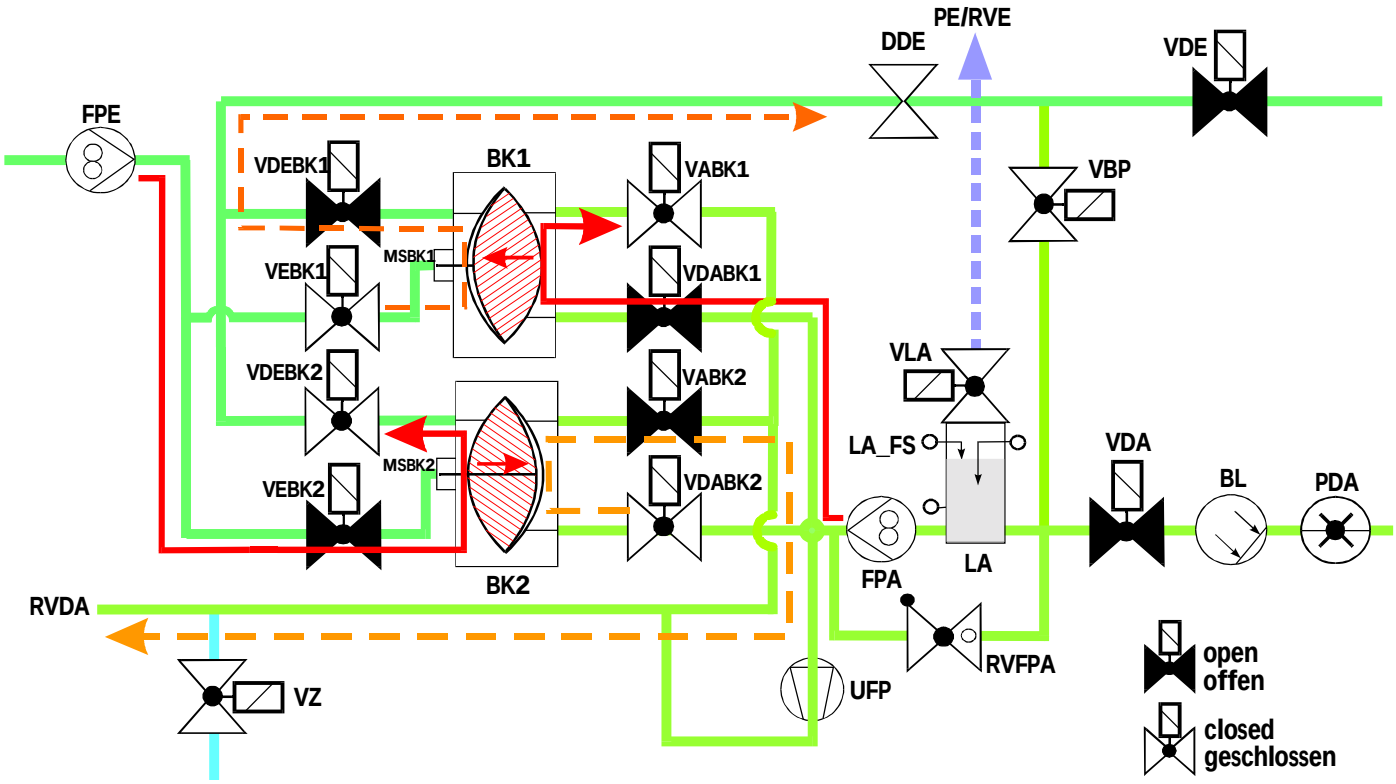

Fig. : Phase 1 Balance Chamber

Phase 2: After phase 1 is completed there is an automatic switch to the filled balance chamber BK2 to obtain a constant flow in the dialyser. The complete cylce is repeated in phase 2, i.e. valves VDEBK2 and VDABK2 are opened. The balance chamber BK2 is filled via valve VDABK2. Simultaneously the dialysate is drained from the balance chamber BK2 via valve VDEBK2. Phase 2 is completed and the menbrane is in left position (see figure).

Simultaneously the balance chamber BK1 is filled with fresh dialysate. Therefore valve VEBK1 is opened. Valve VABK1 is also opened, to initiate the flow path for the used dialysate to the drain. The membrane moves to the right position.

The outlet fluid volume is equal to the returned fluid volume, due to the closed balance chamber system

The fluid volume removed from the closed system via the ultrafiltration pump UFP is replaced from the blood in the dialyser and equals the precise ultrafiltration volume.

The system is initialised in preparation, i.e. the membrane sensors are automatically calibrated and the speed of the flow pumps FPE and FPA are determined. Thus a synchronisation of the membranes is guaranteed, and the pump speeds for the desired flow are determined.

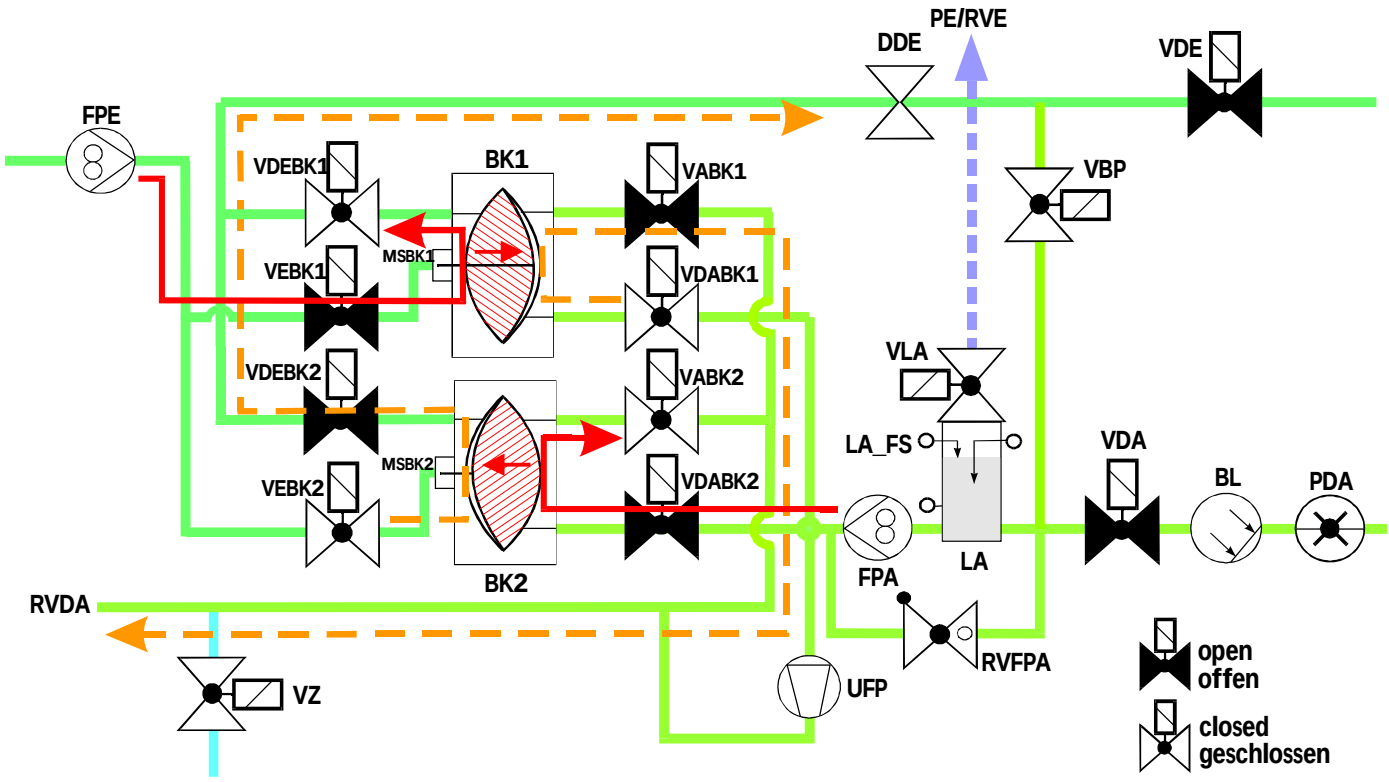

Fig. : Phase 2 Balance Chamber

2.16.8 Ultrafiltration and Rinsing Bridge

The main flow path and bypass have the following components:

- Dialyser Inlet Throttle**DDE**
- Dialyser Inlet Valve **VDE**
- Dialyser Outlet Valve **VDA**
- Bypass Valve **VBP**
- Outlet Flow Pump **FPA**

The flow path for the main flow and bypass are determined by the valves VDE, VDA and VBP. The built up flow from the flow pump FPA is stabilised by the throttle DDE. Valves VDE and VBP are closed for sequential therapy (ultrafiltration without dialysate fluid flow). The ultrafiltrate removal is carried out by the ultrafiltration pump UFP.

Further components are:

- Red sensitive blood leak detector BL
- Pressure sensor PDA which monitors the dialysate pressure (also used to calculate TMP)
- Air separator LA with built in level sensors LAFS and air separator valve VLA
- Throttle RVDA functions as a resistance to stabilise the flow of FPE

The throttle RVFPE prevents a high pressure build-up and thus a bursting of tubing if the flow path is blocked behind FPE. If the set pressure is reached RVFPE is opened and the fluid can circulate.

The fluid level is lowered in the air separator LA, due to air bubbles from the dialyser (degassing or possible leakages). The air separator valve VLA is opened if the fluid level is lower than the bottom level sensor. The fluid level is increased, due to the negative pressure for the degassing range, until the level reaches the upper level sensor of the air separator LA.

2.16.9 Disinfection and Cleaning Program

The user can select a disinfection or cleaning program. The position of the couplings are checked by the sensors BICSS, KSS, SBS1 and SBS2. Then the UF pump UFP starts running and builds up a negative pressure against the closed disinfection valve VD. At approx. -200 mmHg VD opens and disinfectant is sucked in by the UFP.

The circulation valve VZ is open and fluid flows into the upline tank VB, because the throttle RVDA acts as a forward resistance. Thereby a quicker heat-up in the hot cleaning program is achieved and thus a reduction of disinfectant. There is no flow of fluid to the drain during suction, heat-up and circulation.

2.17 Block Diagram

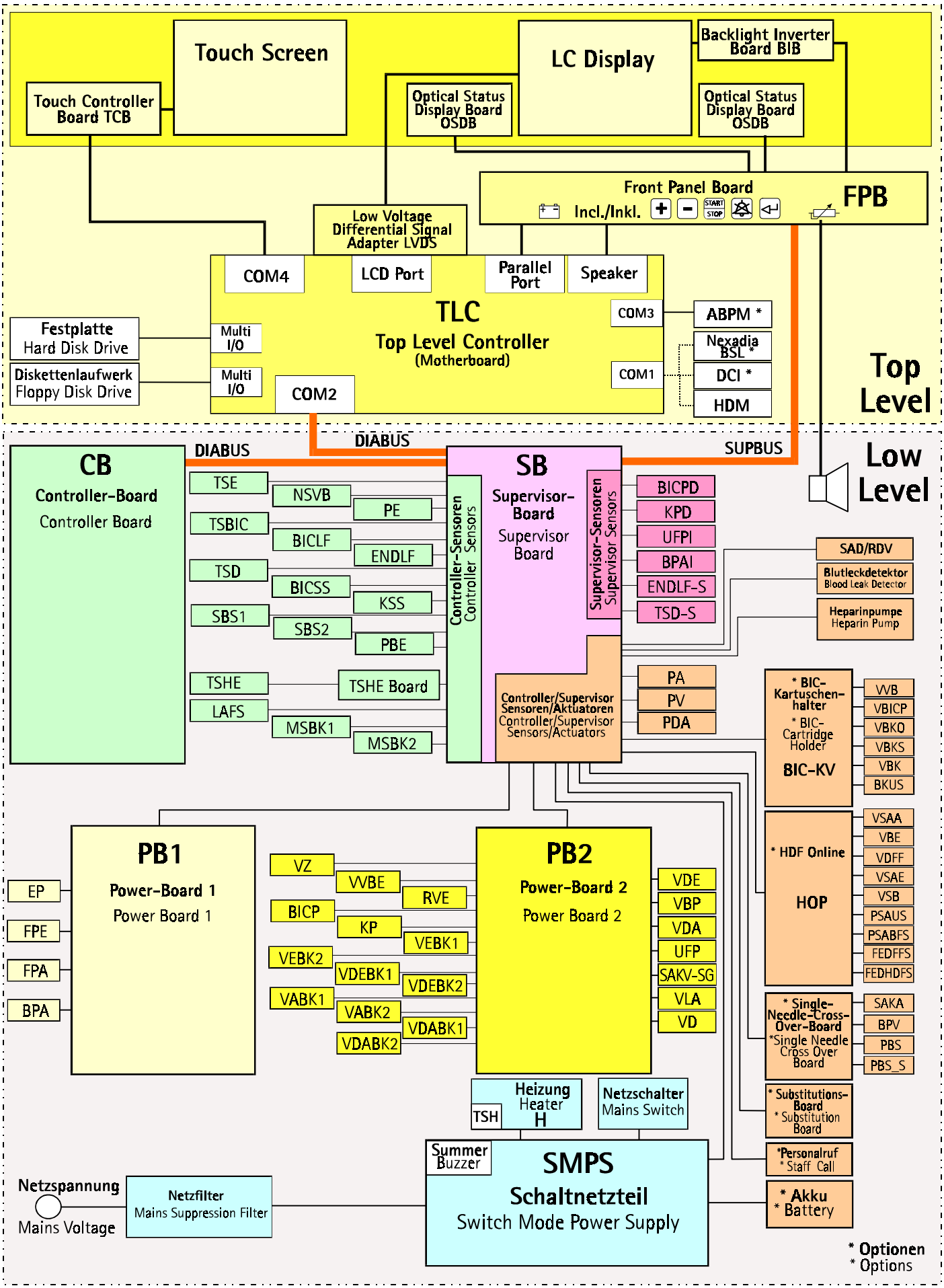

Fig. : Block Diagram

2.17.1 Legend Block Diagram

Supervisor Board SB

Controller Sensoren	
BICLF	Bicarbonate Conductivity
BICSS	Bicarbonate Rinsing Connection Sensor
ENDLF	END Conductivity
KSS	Concentrate Rinsing Connector Sensor
NSVB	Level Sensor Upline Tank
PBE	Pressure Sensor
PE	Degassing Pressure Sensor
SBS1	Rinsing Bridge Connector Sensor 1
SBS2	Rinsing Bridge Connector Sensor 2
TSBIC	Bicarbonate Temperature Sensor
TSD	Dialysate Temperature Sensor
TSE	Degassing Temperarture Sensor
Supervisor Sensors	
ENDLFS	END Conductivity Supervisor
TSDS	Dialysate Temperature Sensor Supervisor
Controller/Supervisor Sensors/Actuators	
BKUS	Bottom Bicarbonate Sensor
BL	Blood Leak Detector
FEDFFS	DF Filter Detection Sensor
FEDHDFS	HD Filter Detection Sensor
LAFS	Air Separator Level Sensors
MSBK1	Membrane Position Sensor Balance Chamber 1
MSBK2	Membrane Position Sensor Balance Chamber 2
PA	Arterial Pressure Sensor
PDA	Pressure Sensor Dialysate Outlet
PSABFS	Port Substition Drain Sensor
PSAUS	Port Substition Outlet Sensor
PV	Venous Pressure Sensor
RDV	Venous Red Detector
SAD	Safety Air Detector
TSHE	Heater Inlet Temperature Sensor
VBE	Filter Vent Valve
VBICP	BIC Pump Valve
VBKS	BIC Concentrate Suction Rod Valve
VBKO	Top BIC Cartridge Valve
VDFF	DF Filter Valve
VSAA	Substitution Connection Outlet Valve (drain)
VSAE	Substitution Connection Inlet Valve
VSB	Substitution Bypass Valve
VVB	Upline Tank Valve

Power Board 1 PB1

BPA	Arterial Blood Pump
EP	Degassing Pump
FPA	Outlet Flow Pump
FPE	Inlet Flow Pump

Power Board 2 PB2

BICP	Bicarbonate Pump
KP	Concentrate Pump
RVE	Degassing Control Valve
SAKV-SG	Venous Tubing Clamp Currentles Closed
UFP	Ultrafiltration Pump
VABK1	Outlet Valve Balance Chamber 1
VABK2	Outlet Valve Balance Chamber 2
VB	Upline Tank
VBP	Bypass Valve
VD	Disinfection Valve
VDA	Dialyser Outlet Valve
VDABK1	Dialyser Outlet Valve Balance Chamber 1
VDABK2	Dialyser Outlet Valve Balance Chamber 2
VDE	Dialyser Inlet Valve
VDEBK1	Dialyser Inlet Valve Balance Chamber 1
VDEBK2	Dialyser Inlet Valve Balance Chamber 2
VEBK1	Inlet Valve Balance Chamber 1
VEBK2	Inlet Valve Balance Chamber 2
VLA	Air Separator Valve
VVBE	Upline Tanke Inlet Valve
VZ	Circulation Valve

Heparin Pump Comfort Board

HP	Heparin Pump Compact

SN-Crossover Board

BPV	Venous Blood Pump
PBS	Pressure Single Needle
PBS-S	Pressure Single Needle Supervisor
SAKA	Arterial Tubing Clamp

Power Supply

H	Heater Element
TSH	Thermal Fuse Heater Element

2.18 TFT Monitor

2.18.1 Description TFT Monitor

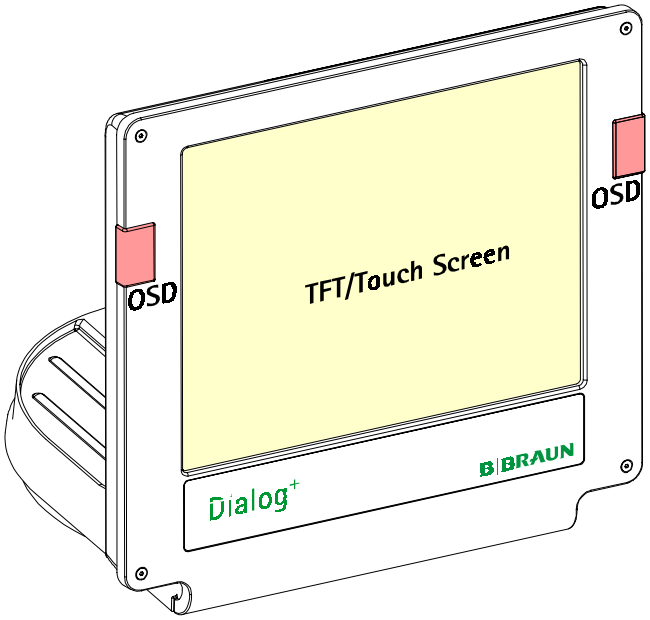

Fig. : TFT Monitor witt Touch Screen

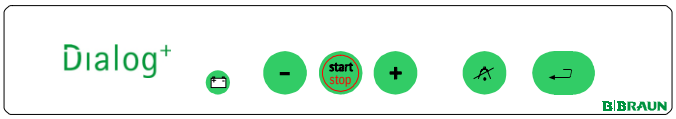

Fig. : Keyboard Membrane

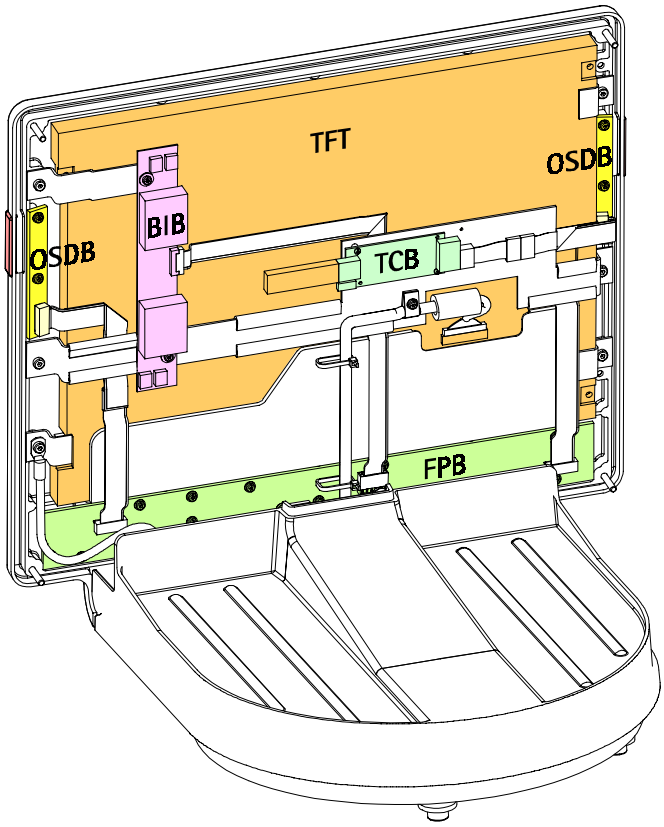

Fig. : Rear TFT Monitor

TFT Monitor

The 15" TFT monitor (TFT=thin film transistor) has a resolution of 1024 x 768 XGA. The TFT housing can be swivelled.

Keyboard

The following settings can be performed via the keyboard:

- Start/stop arterial blood pump BPA
- Increase/decrease speed of arterial blood pump BPA
- Acknowledge alarms
- Acknowledge entries

Display:

Battery Option

Keys:

Decrease speed of arterial blood pump BPA

Start and stop arterial blood pump BPA

Increase speed of arterial blood pump BPA

Acknowledge alarms

Acknowledge entries

The key has two integrated yellow LEDs. In both the and keys two red LEDs are integrated. All keys switch a resistor on the supervisor communication board to ground GNDD.

Optical Status Displays OSD

An optical status display OSD is integrated into the TFT housing (top left and right). The red LED is cyclically checked during therapy. The following operating statuses are displayed:

Red: Alarm
Yellow: Warning
Green: Trouble-free operation

Touch Screen/Touch Controller Board TCB

The touch screen has a resolution of 4096 x 4096 with a 4-wire to technique and has an RS 232 interface (9600 Baud).

Backlight Inverter Board BIB

The backlight inverter board drives four lamps for the TFT monitor.

Front Panel Board FPB

The front panel board has five keys. If a key is pressed a signal is generated for the TLC and LLS.

Three LEDs are integrated in each key. Thus the signals for the TLC are generated. The alarm acknowledge key additionally generates a signal for the LLS.

A charge LED is integrated on the FPB for the battery option.

The volume can be set with a potentiometer. A signal is generated for the TLC. The LLS monitors the signal via the current and the pulse.

The signals are generated for the TLC and LLS for the optical status displays OSDs.

The signals for the brightness of the LEDs (OSD) are generated for the TLC.

The signal (brightness for the TFT) for the backlight inverter board BIB is generated for the TLC.

The signal for the parallel port is generated for the TLC.

The signal for the RS 232 interface is generated for the LLS.

Loudspeaker

A loudspeaker for audible alarms is either integrated in the basic housing. The volume can be set with a potentiometer on the FPB (TFT housing, rear bottom left).

2.19 ABPM Option (None-Invasive Blood Pressure Measurement)

ABPM Option

A none-invasive blood pressure measurement is possible with the ABPM option (automatic blood pressure measurement). The ABPM option works on an oscillometrical basis for the automatical control of the symptomatic hypertonia during dialysis.

The ABPM option can be retrofitted in the dialysis machine.

ABPM Module/ABPM Interface Board

The ABPM option consists of the ABPM module and the ABPM interface board.

Dialog+

The ABPM option will be assembled in the basic housing (left side).

Voltage Supply

The ABPM module is connected to the switch mode power supply via the ABPM interface board (connector P8).

Multi I/O

The ABPM module is connected to the motherboard (COM3 port) via the ABPM interface board.

2.19.1 Wiring Diagram ABPM Option

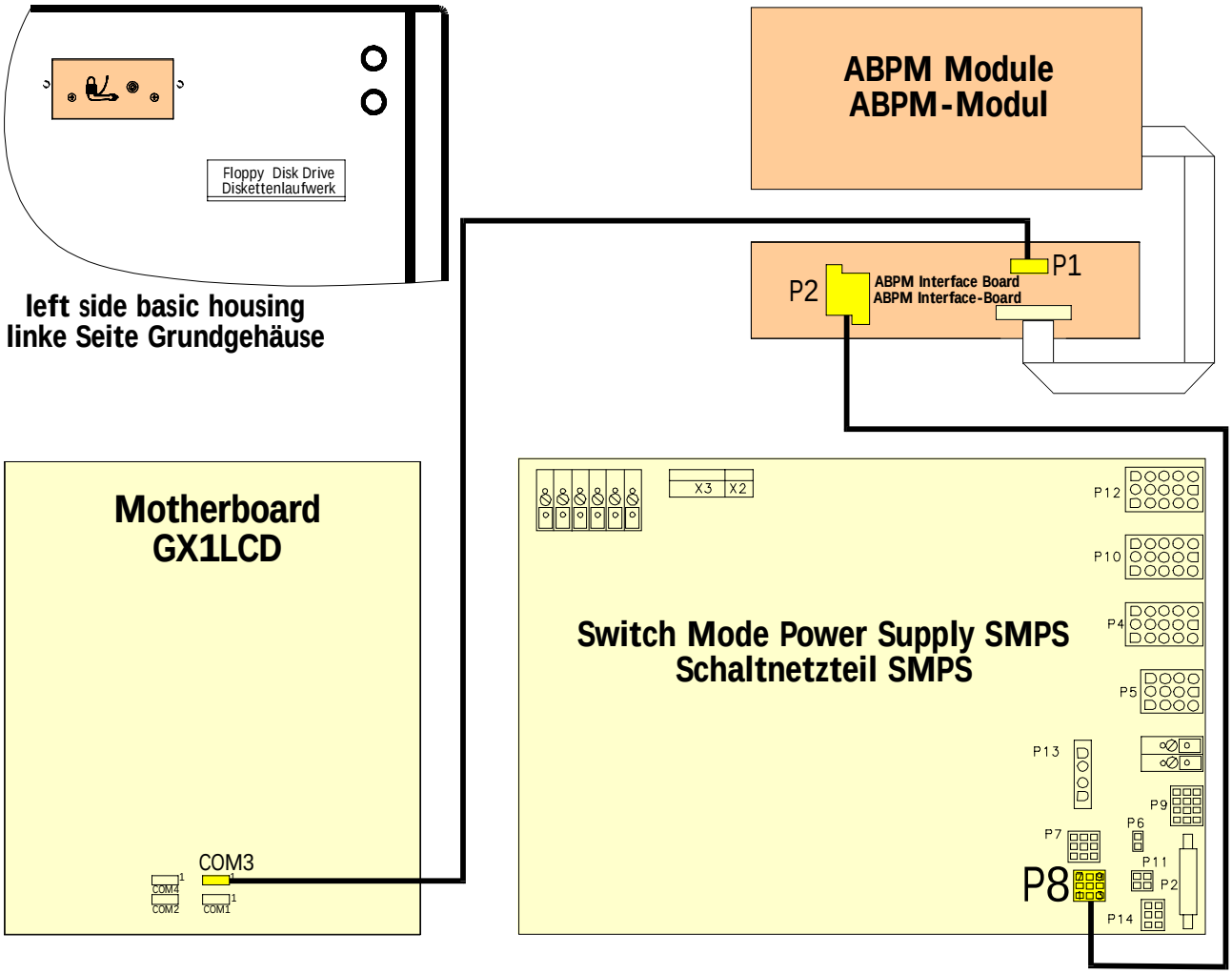

Fig. : Wiring Diagram ABPM Option

2.20 bioLogic RR Option (Automatic Blood Pressure Stabilisation)

The bioLogic RR option can be installed and activated subsequently. The ABPM option must be present in the Dialog+ to run the bioLogic RR option.

The software for the bioLogic RR option is installed via an installation diskette. The diskette is automatically marked (assigned to the machine) during installation and subsequently can only be used for this specific Dialog+ machine.

- Installation diskette for bioLogic RR for SW ≥ 6.20

Note

If the TLC software has to be reinstalled or the hard disk drive has to be replaced:

Activate the option bioLogic RR, i.e. use the bioLogic RR installation diskette which belongs to the respective machine and activate again the option.

2.21 Supervisor Board SB

2.21.1 Supervisor

2.21.1.1 Block Diagram Supervisor

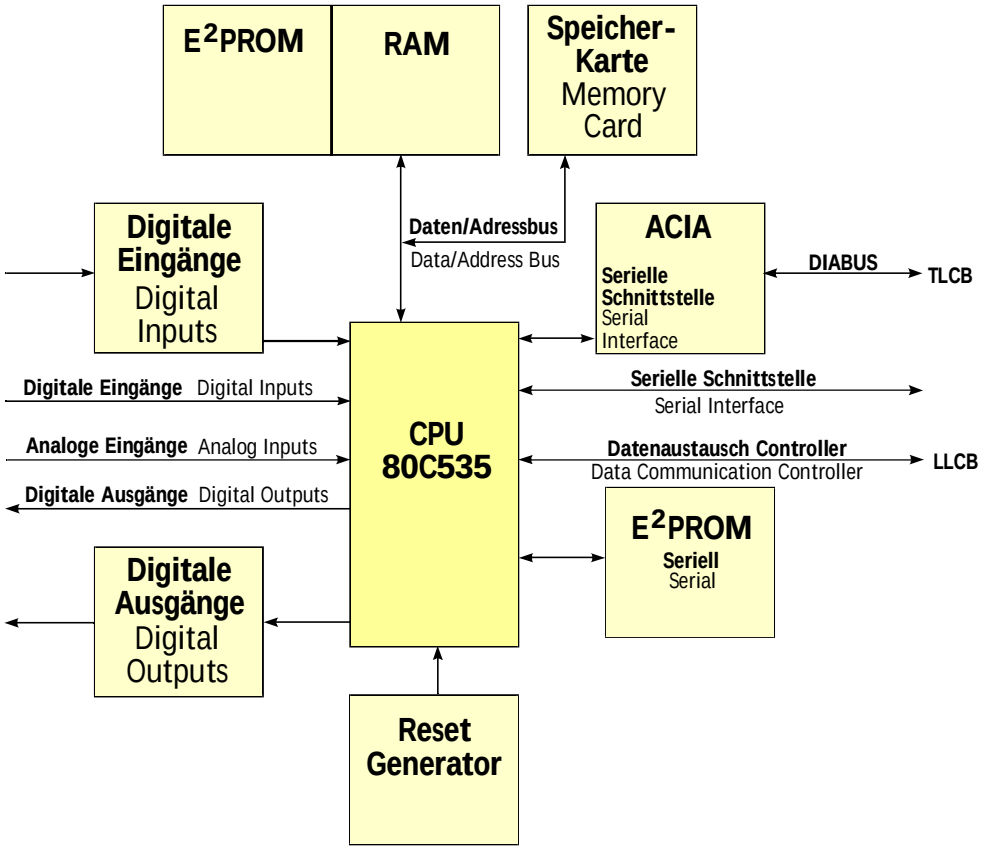

Fig. : Block Diagram Supervisor Board

2.21.1.2 Description Supervisor

The supervisor board connects the low level controller LLC with the peripheral. Additionally the supervisor (monitoring microprocessor) is integrated on the board. The following components are assembled on the board. The sensors are directly connected:

- Bicarbonate Conductivity Measurement
- END Conductivity Measurement Controller
- END Conductivity Measurement Supervisor
- DegassingTemperature Measurement
- Bicarbonate Temperature Measurement
- Dialysate Temperature Measurement Controller
- Dialysate Temperature Measurement Supervisor
- Level Sensors Upline Tank
- Reed Contacts Rinsing Bridge
- Venous Pressure Sensor
- Arterial Pressure Sensor
- Level Sensors in the Air Separator
- Red Sensors
- Degassing Pressure Measurement
- Blood Inlet Pressure Measurement

Additionally the following components are available for monitoring and control:

- Monitoring of analogue 12 V supply voltage
- Synchronisation of actual pump values

The signal processing for the low level controller and supervisor are on the supervisor board. All sensors are connected to this board via plugs. The power board BP1 and PB2 are also connected to this board. Signals for single sensors of the processor system are also processed separately.

Microprocessor

The supervisor has the following components:

- 80C535 CPU
- E^2PROM

Connection for:

- Memory Card
- Digital Inputs and Outputs
- Analogue Inputs
- Serial Interface
- Communication with the Controller
- Reset Generator

80C535 CPU

The supervisor CPU (central processing unit) has the following data:

- 8 Bit Processor
- 256 x 8 RAM (internal)
- 6 8 Bit I/O Ports
- 3 16 Bit Counter
- 1 Serial Interface with max. 9600 Baud
- 8 Bit AD Converter with 8 Multiplexer Inputs

Address Decoding Logic

The processor is equipped with a 32 kB external RAM and a 1 MB E^2PROM. The program code is stored in the E^2PROM. The RAM is used to store data.

Serial E^2PROM

The serial E^2PROM stores the supervisor sensor calibration data. The data is stored during calibration in the TSM service program and loaded before a therapy is activated.

Digital Inputs and Outputs

Additional signal memory (latches) for the in- and outputs are available, because the implemented ports of the 535 processor are limited. The outputs have open colectors. All inputs have TTL level.

Analogue Inputs

The processor has an internal 8 bit AD converter. The input voltage range is 0 to 5 V. The supervisor monitors the analogue sensors conductivity, temperature and pressure, these are directly connected with the inputs.

Serial Interface

The serial interface is used for the communication with the front panel board FPB (via the SUPBUS). The transfer rate is 9600 baud. The interface works in full duplex mode with V 24 level.

An additional ACIA (asynchronous communications interface adapter) is implemented for the communication with the top level controller via the DIABUS. The ACIA works in full duplex mode with 19200 baud and 24 V level.

Communication with the Controller

The communication with the controller is realised by a parallel interface. The interface has signal memory (latches).

Reset Generator

The reset generator resets the processor after the supply voltage is switched on. Thereby the program can start at a predefind address.

2.22 Bicarbonate Conductivity Measurement

2.22.1 Block Diagram Bicarbonate Conductivity Measurement

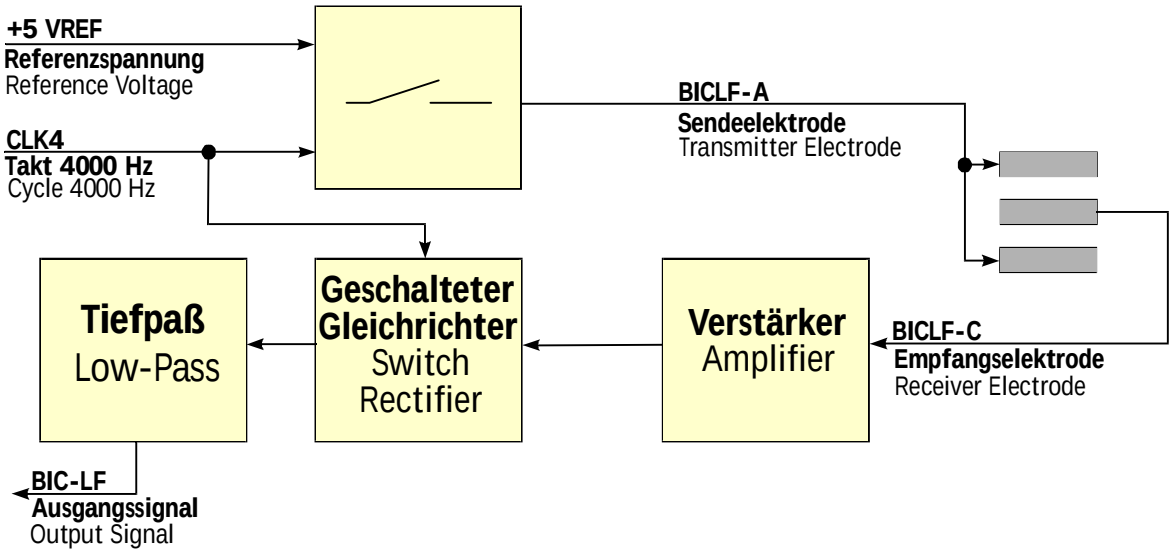

Fig. : Block Diagram Bicarbonate Conductivity Measurement

2.22.2 Description Bicarbonate Conductivity Measurement

The conductivity of the dialysate is determined by a resistance measurement. The measurement is performed by an alternating current with approx. 4 kHz. The calibration is accomplished by the controller. The measurement cell has two transmitter electrodes and a receiver electrode with a fixed cell constant.

- A transmitter voltage for the transmitter electrode BICLF_A signal is generated from the +5 VREF reference voltage by the CLK4 signal (4000 Hz).
- The signal runs through the fluid.
- The received BICLF_C signal is amplified.
- The switched rectifier converts the a.c. voltage to a d.c. voltage BIC_LF.
- A d.c. voltage, which is proportional to the conductivity is fed to the AD converter.
- The temperature compensation and linearisation of the conductivity is performed by the controller.

2.23 END Conductivity Measurement Controller

2.23.1 Description END Conductivity Measurement Controller

The design of the END conductivity measurement controller is identical with the bicarbonate conductivity measurement in paragraph 2.22.

2.23.2 END Conductivity Measurement Supervisor

2.23.3 Block Diagram END Conductivity Measurement Supervisor

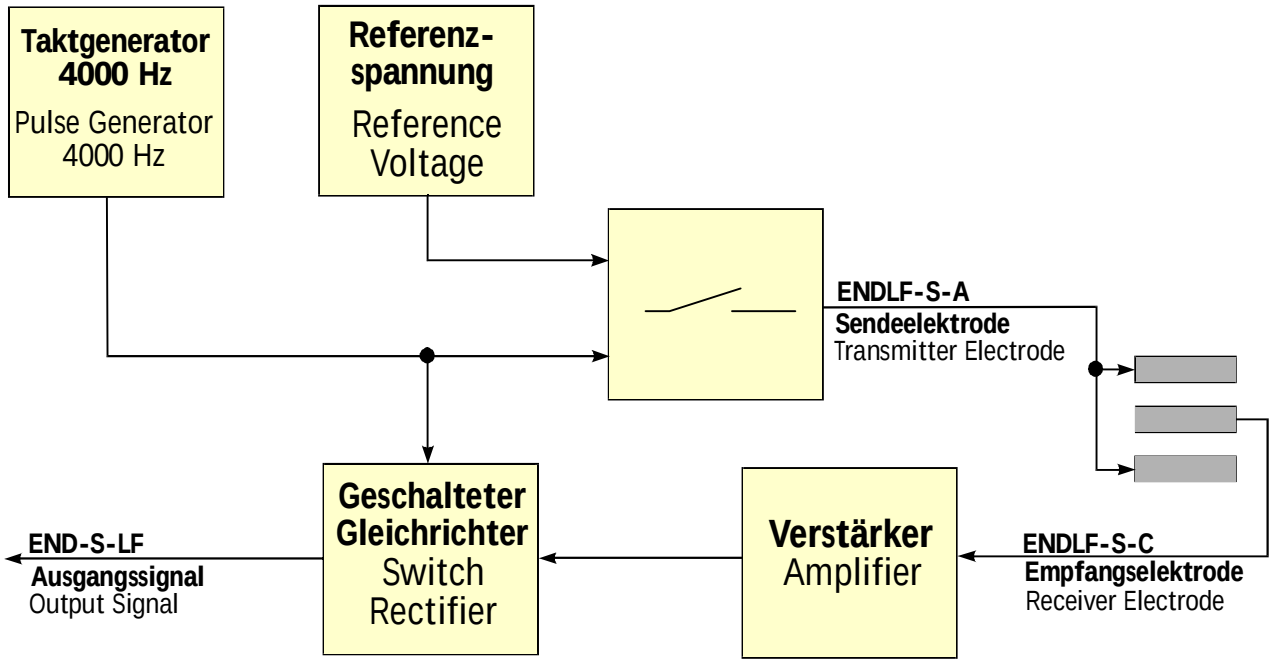

Fig. : Block Diagram END Conductivity Measurement Supervisor

2.23.4 Description END Conductivity Measurement Supervisor

The END conductivity measurement of the dialysate by the supervisor is in principle identical with the controller. The differences are:

- The independent generation of the reference voltage and the clock signal
- Dimension of the Measurement Cell

The calibration is performed by the supervisor software.

2.24 Temperature Measurement

2.24.1 Block Diagram Degassing Temperature Measurement

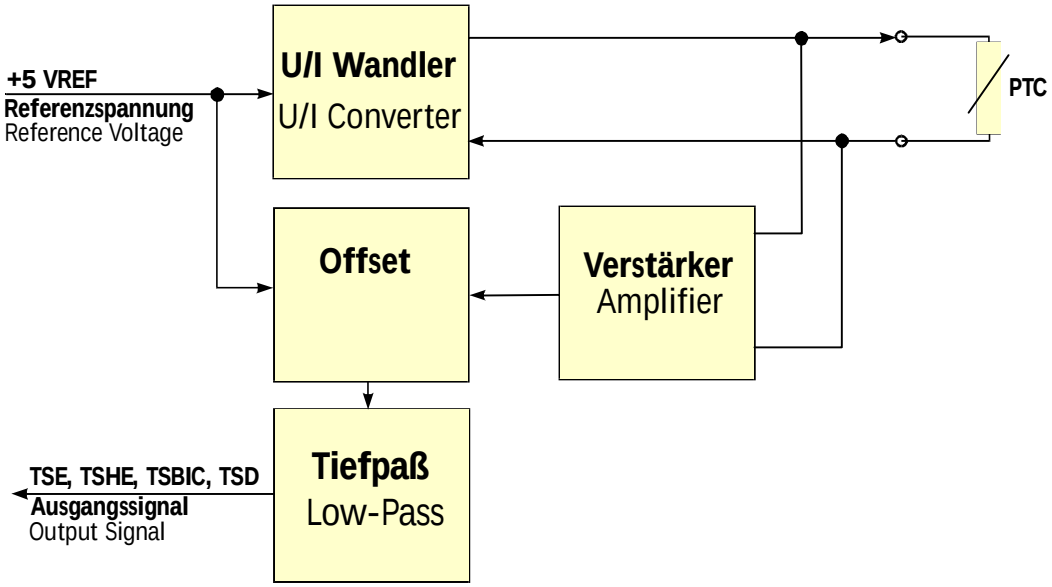

Fig. : Block Diagram Degassing Temperature Measurement

2.24.2 Design Degassing Temperature Measurement

The temperature of the fluid is measured by a PTC resistor (PTC positive temperature coefficient).

- The PTC has a constant current flow of < 0.1 mA
- The voltage drop is measured and amplified in a differential amplifier
- An offset voltage is added to lift the zero point. Thereby the measurement range of the AD converter has an optimal working condition.
- The output voltage is fed to the AD converter on the supervisor board via a low-pass filter.

2.24.3 Description Bicarbonate Temperature Measurement

The design is identical with the degassing temperature measurement in paragraph 2.24.1.

2.24.4 Description Dialysate Controller Temperature Measurement

The design is identical with the degassing temperature measurement in paragraph 2.24.1.

2.24.5 Block Diagram Dialysate Supervisor Temperature Measurement

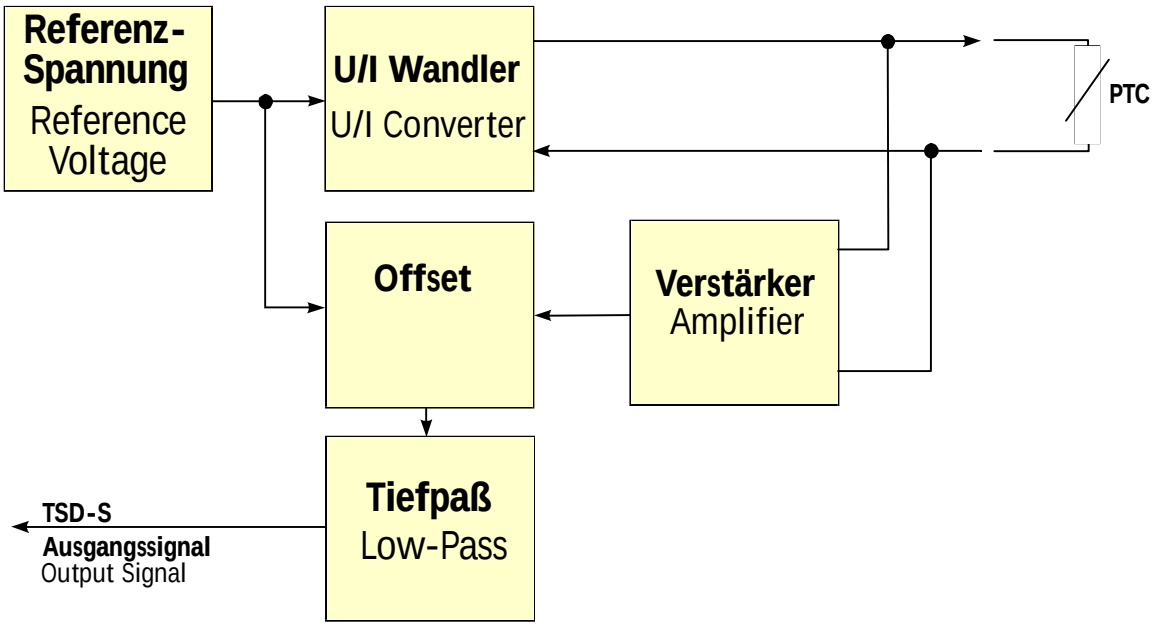

Fig. : Block Diagram Dialysate Supervisor Temperature Measurement

2.24.6 Description Dialysate Supervisor Temperature Measurement

The temperature measurement of the supervisor has an independent reference voltage source. Thus a cross-interference with the temperature sensors of the controller is excluded.

2.25 Level Measurement

2.25.1 Block Diagram Level Measurement Upline Tank

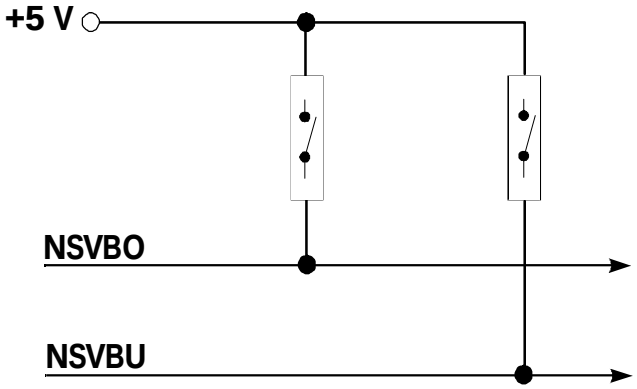

Fig. : Block Diagram Upline Tank

2.25.2 Description Level Measurement Upline Tank

The level sensor in the upline tank has two reed contacts. The contacts are switched by an internal magnet in a float ball. Pull-up resistors are on the input. The query is carried out by the digital inputs of the controller.

2.26 Reed Contacts

2.26.1 Block Diagram Coupling Status

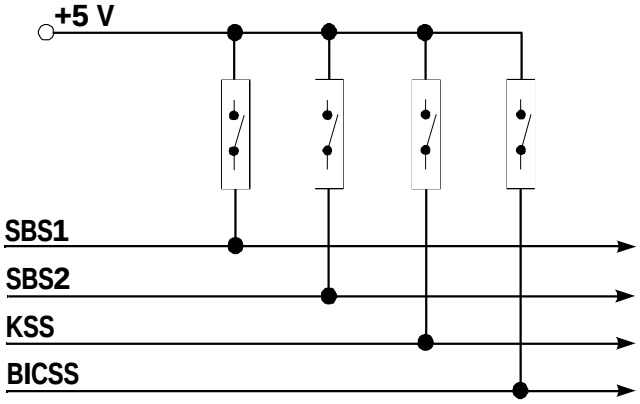

Fig. : Block Diagram Query Reed Contacts

2.26.2 Description Coupling Status

Magnets are integrated in the dialysate couplings und concentrate couplings. If the couplings are connected the reed contacts are switched. The query is performed by the digital inputs of the controller and supervisor. The inputs have pull-up resistors.

2.27 Pressure Measurement

2.27.1 Block Diagram Venous Pressure Measurement

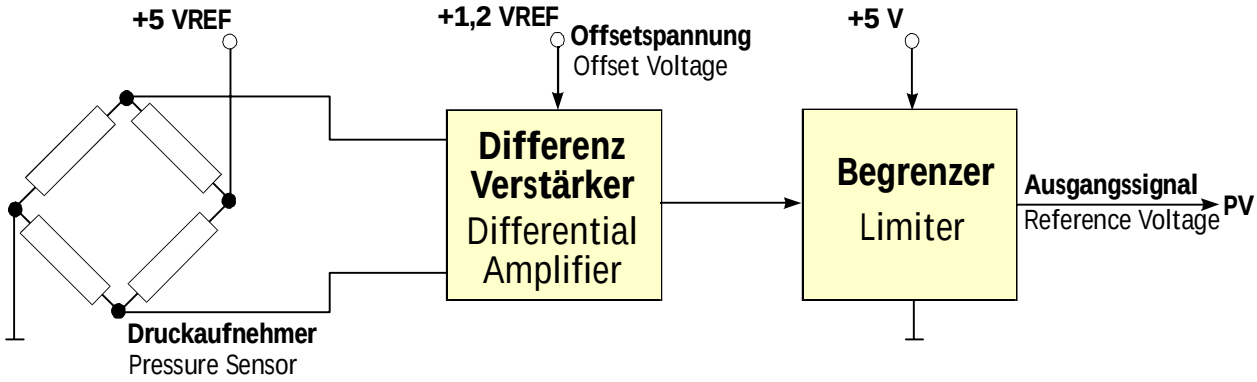

Fig. : Block Diagram Venous Pressure Measurement

2.27.2 Description Venous Pressure Measurement

The pressure sensor has a resistance bridge. The resistance value changes in accordance with the present pressure value. A constant +5 VREF is connected to the bridge.

- The measurement signal is tapped and amplified in the differential amplifier.
- An offset voltage is added to lift the zero point. Thereby the measurement range of the AD converter has an optimal working condition.
- The voltage is limited to +5 V by a clamp circuit on the output, in the event of a fault condition. A damage of the following circuit components is thereby prevented.

2.27.3 Block Diagram Arterial Pressure Measurement

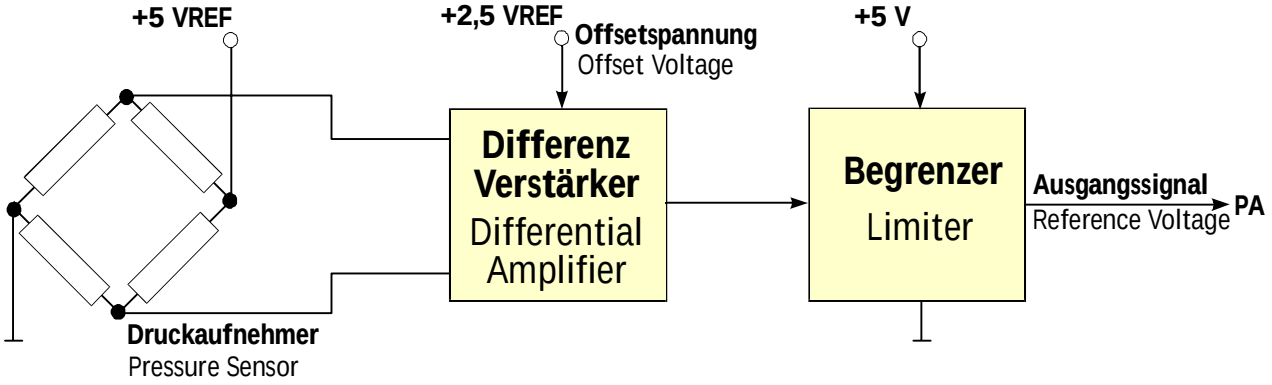

Fig. : Block Diagram Arterial Pressure Measurement

2.27.4 Description Arterial Pressure Measurement

The design of the arterial pressure measurement is identical with the venous pressure measurement in paragraph 2.27.2, with the exception of the offset voltage.

2.28 Blood Inlet Pressure Measurement

2.28.1 Block Diagram Blood Inlet Pressure Measurement

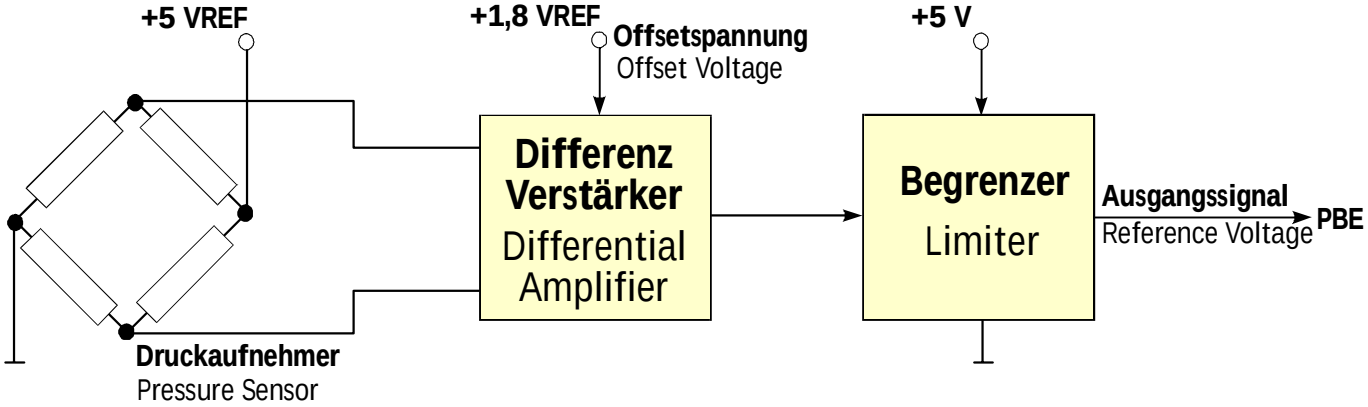

Fig. : Block Diagram Blood Inlet Pressure Measurement

2.28.2 Description Blood Inlet Pressure Measurement

The design of the blood inlet pressure measurement is identical with the venous pressure measurement in paragraph 2.27.2, with the exception of the offset voltage.

2.29 Level Sensors

2.29.1 Block Diagram Level Sensors Air Separator

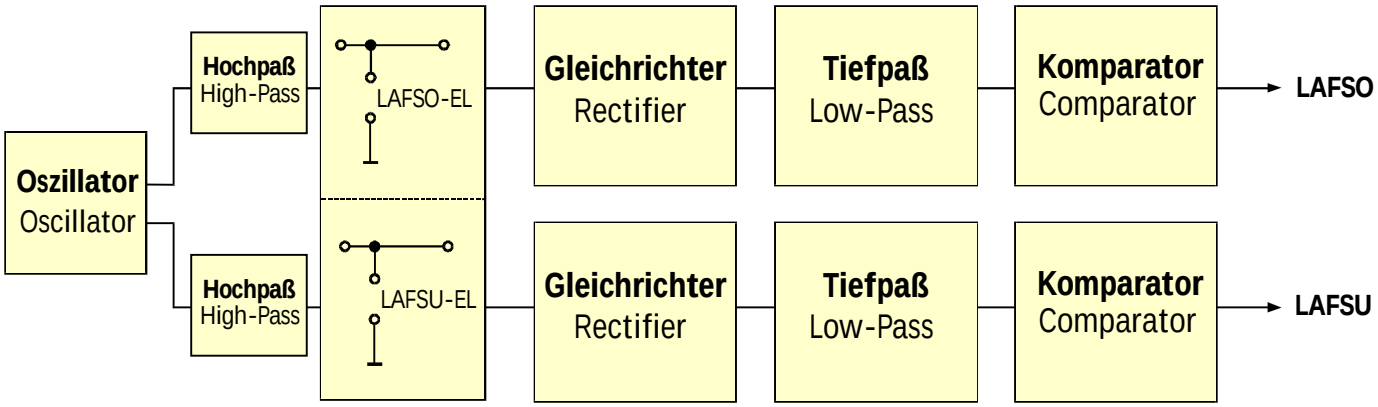

Fig. : Block Diagram Level Sensors

2.29.2 Description Level Sensors Air Separator

The query of the fluid level in the air separator behind the balance chamber is accomplished by the conductivity of the dialysate.

- The oscillator generates an a.c. voltage with a frequnecy of approx. 8 kHz.
- The d.c. voltage part is removed by a high-pass.
- The output voltage is fed to the electrode.
- If the electrode immerses into the fluid due to an increase of the fluid level, the voltage at the electrode is decreased.
- The voltage is rectified for evaluation and smothed by a low-pass
- This d.c. voltage is compared with a reference voltage by a comparator.

2.30 Red Detector

2.30.1 Block Diagram Red Detector

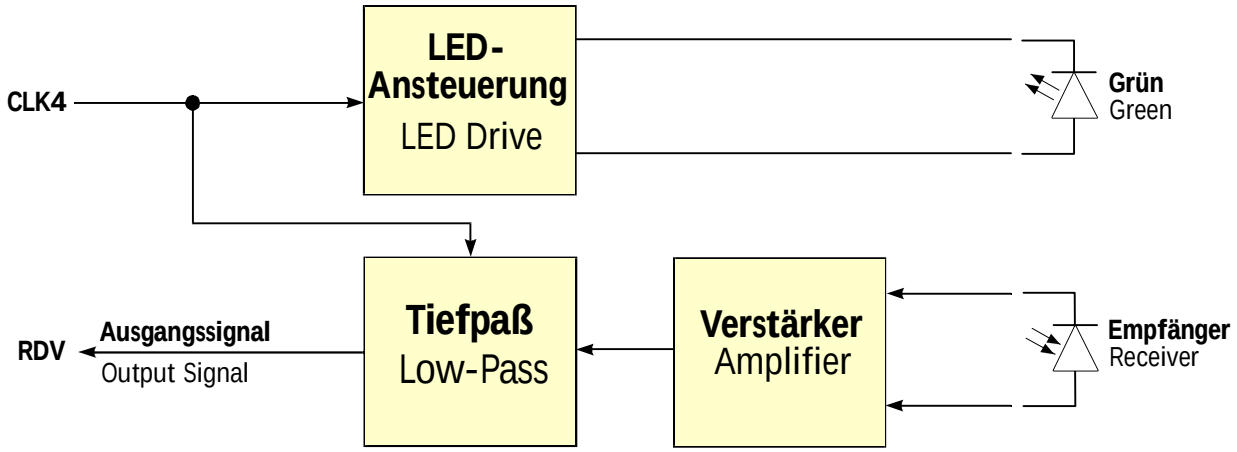

Fig. : Block Diagram Red Detector

2.30.2 Description Red Detector

The red detector works as a light barrier with a triggered 4 kHz green light.

- The received signal from the photo transistor is amplified.
- The signal is only evaluated, if the green LED is also driven.
- External interferences are thereby prevented.

The venous red detector RDV has an additional preamplifier.

2.31 Degassing Pressure Measurement and Dialysate Pressure Measurement

2.31.1 Block Diagram Pressure Measurement

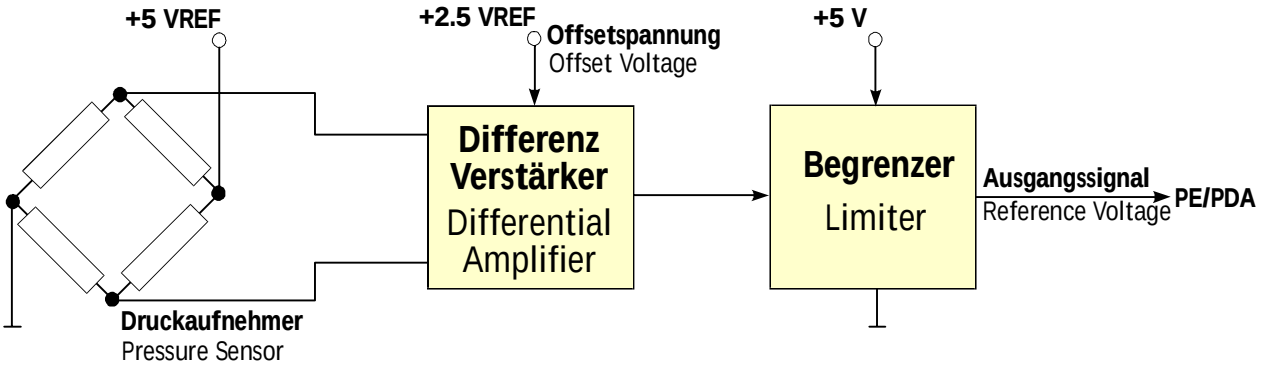

Fig. : Block Diagram Pressure Measurement

2.31.2 Description Pressure Measurement

The respective pressure sensor has a resistance bridge. The resistance value changes in accordance with the present pressure value. A constant +5 VREF is connected to the bridge.

- The measurement signal is tapped and amplified in the differential amplifier.
- An offset voltage is added to lift the zero point. Thereby the measurement range of the AD converter has an optimal working condition.
- The voltage is limited to +5 V by a clamp circuit on the output, in the event of a fault condition. Thereby a damage of the following circuit components is prevented.

2.32 Monitoring Analogue 12 V Voltage Supply

2.32.1 Block Diagram Monitoring of Analogue 12 V Voltage Supply

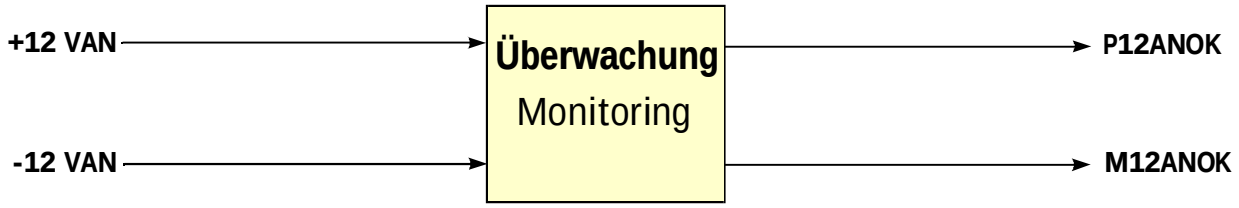

Fig. : Block Diagram Analogue 12 V Voltage Supply

2.32.2 Description Monitoring Analogue 12 V Voltage Supply

The analogue +12 VAN and -12 VAN supply voltages are monitored by two voltage monitoring components against deviation. The components have an internal reference voltage source. Thereby the connected voltage can be constantly monitored. The P12ANOK and M12ANOK signal are switched at the output, if the voltage is lower than 10.8 V.

2.33 Safety Air Detector SAD and Venous Red Detector RDV

2.33.1 Block Diagram SAD/RDV

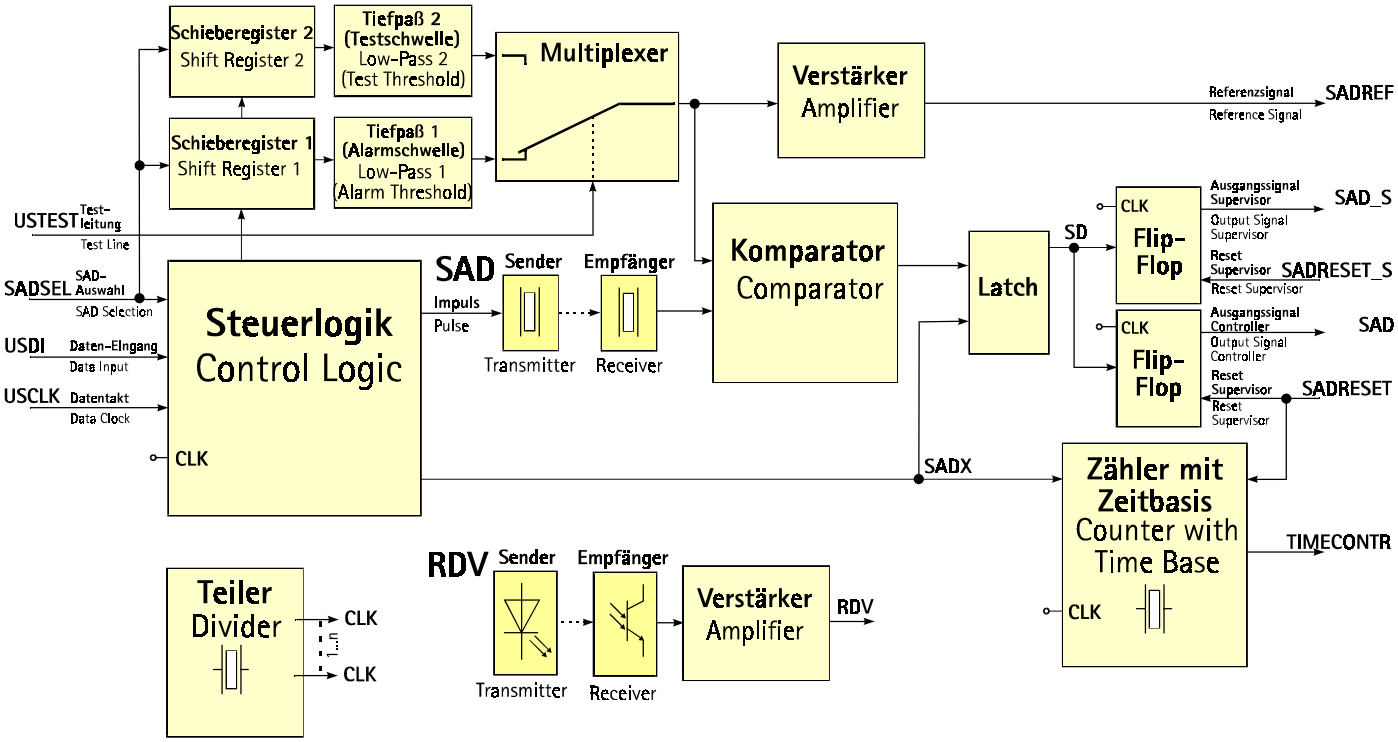

Fig.: Block Diagram Safety Air Detector SAD/RDV

2.33.2 General Information SAD

Decrementation of Detected Air Volume

If an alarm was not previously activated, the detected and added air volume from both the LLC and LLS system is decremented with a rate of 1 µl s^{-1} Thus air bubbles which may have gathered in the venous bubble catcher and are accumulated in larger time intervals, do not automatically lead to an alarm, because the detected air volume is continuously subtracted by 1 µl s^{-1}.

Flow Dependent Alarm Limits

The alarm limits for the air alarm depend upon the flow through the detector:

- 50 ..... 200 ml min^{-1} blood flow = 0.2 ml
- 200 ... 400 ml min^{-1} blood flow = 0.3 ml
- 400 ... 850 ml min^{-1} blood flow = 0.5 ml

Example

- set blood flow =250 ml min^{-1}
- no substitution
  - Flow through the sensor = 270 ml min^{-1}:
    (270 ml min^{-1} = 250 ml min^{-1} set blood flow + 20 ml min^{-1} additional flow possible by external infusion devices, e.g. HDF
  - Alarm limit value = 0.3 ml air

Event Chart

Example 200 ... 400 ml min^{-1} blood flow = 0.3 ml:

- at t = 0 an air bubble with 0.2 ml is detected
- after t = 3 min a second air bubble with 0.2 ml is detected
- after time t = 4 min a third air bubble with 0.2 ml is detected

Ergebnis:

t [min]	Detected Air Volume in Software Counter [ml]	Alarm Limit Value [ml}	SAD Alarm yes / no
-1	0	0,3	no
0	0 + 0,2 air	0,3	no
1	0,14	0,3	no
2	0,08	0,3	no
3	0,02 + 0,2 air	0,3	no
4	0,16 + 0,2 air	0,3	yes
6	0 after acknowledgement	0,3	no

After t = 3 min a second air bubble with 0.2 ml is detected. An alarm is not activated, because the first detected air volume is decremented with a rate of 1 µl s^{-1}, during t = 3 min = 180 s (i.e. 0.18 ml). After t = 4 min an SAD alarm is activated, because the limit of 0.3 ml is exceeded..

2.33.3 Description Safety Air Detector SAD

Principles of Air Monitoring

The monitoring of air is performed by ultrasonic transmitting between two piezo elements. The piezo elements work as trasmitter and receiver. The transmitter piezo element transmits pulses. These pulses are transmitted through the tubing, which is filled with blood (air), to the receiver piezo element. The filled tubing is the transmitting path.

If the tubing is filled with blood the transmitting signal is only slightly attenuated (so-called coupling resistance). If the tubing is filled with air the transmitting signal is attenuated very strongly.

The received amplitude is evaluated. Thus the condition (attenuation) of the transmitting path can be derived.

This received amplitude is compared with an alarm threshold:

Blood in tubing (no attenuation):
- Amplitude of receiver signal > alarm threshold.

Air in tubing (large attenuation):
- Amplitude of receiver signal < alarm threshold.

If air is in the tubing the alarm threshold is not reached and the SAD indicates air in system.

SAD Function

The ultrasonic transmitting pulse is triggered cyclically. The transmitting pulse is variably attenuated, depending on the air concentration in the tubing. The received voltage amplitude is compared with an alarm threshold. If the voltage drops below the alarm threshold the SAD and SAD_S signals of the flip-flops are set.

The SAD signal is checked cyclically by the low level controller LLC and then reset by the SADRESET signal. Simultaneously the low level supervisor LLS checks cyclically the SAD_S signal and is then reset by the SADRESET_S signal.

The LLC checks cyclically the function of the SAD during operation by switching from the alarm threshold to the test threshold. LLC and LLS expect an air signal after the activation of the test threshold.

An air signal is present at the flip-flop SAD_S, due to the cyclic test, until the SADRESET_S signal resets the air signal. The LLS monitors cyclically if at least air was detected once in 1.5 s. If air was not detected an SAD alarm is activated.

SAD Calibration

The test threshold and alarm threshold for the SAD are calibrated in the TSM service program. In dialysis the test threshold is cyclically checked to guarantee that the sensitivity of the SAD has not been reduced compared to calibration. Thus a reduction of sensitivity is detected caused by operation and ageing. The alarm threshold is cyclically measured (250 ms) by the LLS during therapy and compared with the fixed alarm threshold. The calibration threshold is the maximum sensitivity which can be reached. An individual calibration value is set in the TSM service program for the calibration ex works.

Control Logic

In the control logic the signals are linked for programming the shift register and to generate the process control for the SAD. Additionally the transmitter pulses are triggered and the receiver window is closed or opened.

Divider and Oscillator 3.6864 MHz

A quartz oscillator with a divider generates the necessary clock signals.

Transmitter

The tramsmitter piezo element oscillates via an induction voltage (piezo effect) and transmits ultrasonic waves.

Receiver

The transmitted pulses from the transmitter are converted into a voltage in the receiver piezo element (piezo effect). The receiver voltage is fed to the comparator input.

Programming of Shift Registers 1 and 2

The shift registers are selected by the SADSEL signal to enable data loading. The USDI signal is loaded into the shift register by the clock pulse signal USCLK. The outputs of the shift registers are fed to the low-passes.

Shift Register 1 and Low-Pass 1 (Alarm Threshold)

The output of the shift register 1 controls the control input of the multiplexer. A pulse width modulated voltage PWM is present at the output of the shift register 1. The low-pass 1 smooths the voltage which is fed to the multiplexer. This voltage is the alarm threshold for the comparator.

Shift Register 2 and Low-Pass 2 (Test Threshold)

The output of the shift register 2 controls the control input of the multiplexer. A pulse width modulated voltage PWM is present at the output of the shift register 2. The low-pass 2 smooths the voltage which is fed to the multiplexer. This voltage is fed to the comparator, during the cyclic SAD test.

Comparator

The comparator compares the receiver voltage with the alarm threshold. The receiver voltage is smaller than the alarm threshold if the transmitter signal is attenuated, due to air in the tubing. Together with the function of the receiver window the output signal of the comparator (to the flip-flop) becomes logic 1.

The receiver signal is larger than the alarm threshold if blood is in the tubing. The output signal of the comparator (to the flip-flop) becomes logic 0.

SAD Signal for LLC

The SD signal is fed to the flip-flop and sent to the LLC as SAD signal. The SAD signal is checked cyclically by the LLC. The LLC resets the flip-flop via the SADRESET signal. If air is detected at any time during a cycle the SAD output changes to logic 0. Thereby the LLC evaluates the complete last cycle as air.

SAD_S Signal for LLS

The SD signal is fed to the flip-flop and sent to the LLS as SAD_S signal. The SAD_S signal is checked cyclically by the LLS. The LLS resets the flip-flop via the SADRESET_S signal. If air is detected at any time during a cycle the SAD_S output changes to logic 0. Thereby the LLS evluates the complete last cycle as air.

Test SAD and SAD_S

The voltage of the low-pass 2 is switched cyclically to the comparator output by the USTEST signal. Thus the comparator, the coupling and the dynamic of the circuit is checked. The alarm threshold and the test threshold (voltage of low-pass 2) is switched by the multiplexer.

SADREF Signal

The amplifier is a differential amplifier with follow-up impedance. The difference between the voltage at the comparator input and the voltage at the voltage divider is amplified. LLS ckecks cyclically (250 ms) the alarm threshold with the calibrated alarm threshold during therapy. If the value is out of limits a reference alarm is activated.

TIMECONTR Signal

The quartz oscillator monitors the SAD sampling frequency. If the control logic and quartz oscillator work correctly the divider is reset by the SADX signal.

The counter output becomes logic 1 if the SADX signal is not present or the time between two reset pulses is too long. Thereby a drop below the SAD sampling frequency is reported to the LLS. The TIMECONTR signal becomes logic 1 and inhibits the CLK input of the counter. Thereby an overflow of the counter and a removal of the TIMECONTR alarm is prevented.

Furthermore the SADRESET signal of the LLC is monitored. If the SADRESET signal becomes logic 0, due to an error, the SADX signal cannot reset the counter. This leads to a TIMECONTR alarm.

2.33.4 Description Venous Red Detector RDV

Assignment and Function Red Detector

The venous red detector RDV detects blood with a certain concentration. The RDV assists the user during the connection of the venous line to the patient and after therapy during disconnection with sodium chloride bags. The amplified RDV signal is processed on the supervisor board and sent to the TLC via the DIABUS.

Principle of Venous Red Detector RDV

The RDV consists of a transmitter (green LED) and a receiver (phototransistor). A tubing is between transmitter and receiver. Blood, colourless turbid fluid or air can be in the tubing. The RDV generates a signal to detect red fluid or colourless fluid.

The function principle of the RDV is based on the fact that blood absorbes all colours with the exception of red. The green light is attenuated if blood enters the RDV. Blood or colourless fluid can be distinguished with the phototransistor and the comparator.

RDV Signal

The receiver signal of the phototransistor is amplified. The RDV signal is fed to the supervisor board SB for further signal processing. The signal is fed to the low level controller LLC which provides the signal to the top level controller TLC.

2.34 Blood Leak Detector

2.34.1 Block Diagram Blood Leak Detector

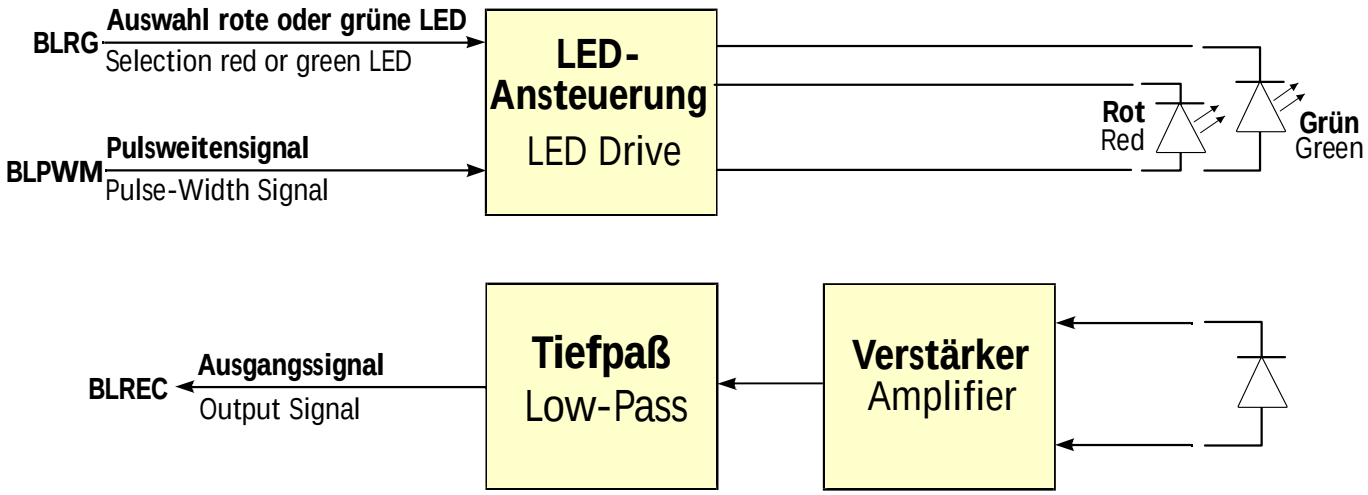

Fig. : Block Diagram Blood Leak Detector

2.34.2 Description Blood Leak Detector

The drive and evaluation circuit is mounted on the sensor head. The amplified signal of the receiver is fed to the supervisor board. The blood leak detector works with red and green light. The transmitter LEDs are mounted opposite to the receiver diodes (transmitted light). The drive and evaluation is carried out by the controller. The actual value is also fed to the supervisor.

Drive Principle

The drive of the LEDs is performed alternately by the BLPWM signal. The red LED is used to level any turbidity.

Calibration

For calibration the red and green LED are driven by the BLRG signal, until both have identical output voltage. If a turbidity occurs, both drive signals are increased. If the dialysate is stained by blood only the green LED signal is attenuated. The output signal is reduced and blood is thereby detected.

2.35 Controller Board CB

2.35.1 Block Diagram Controller Board

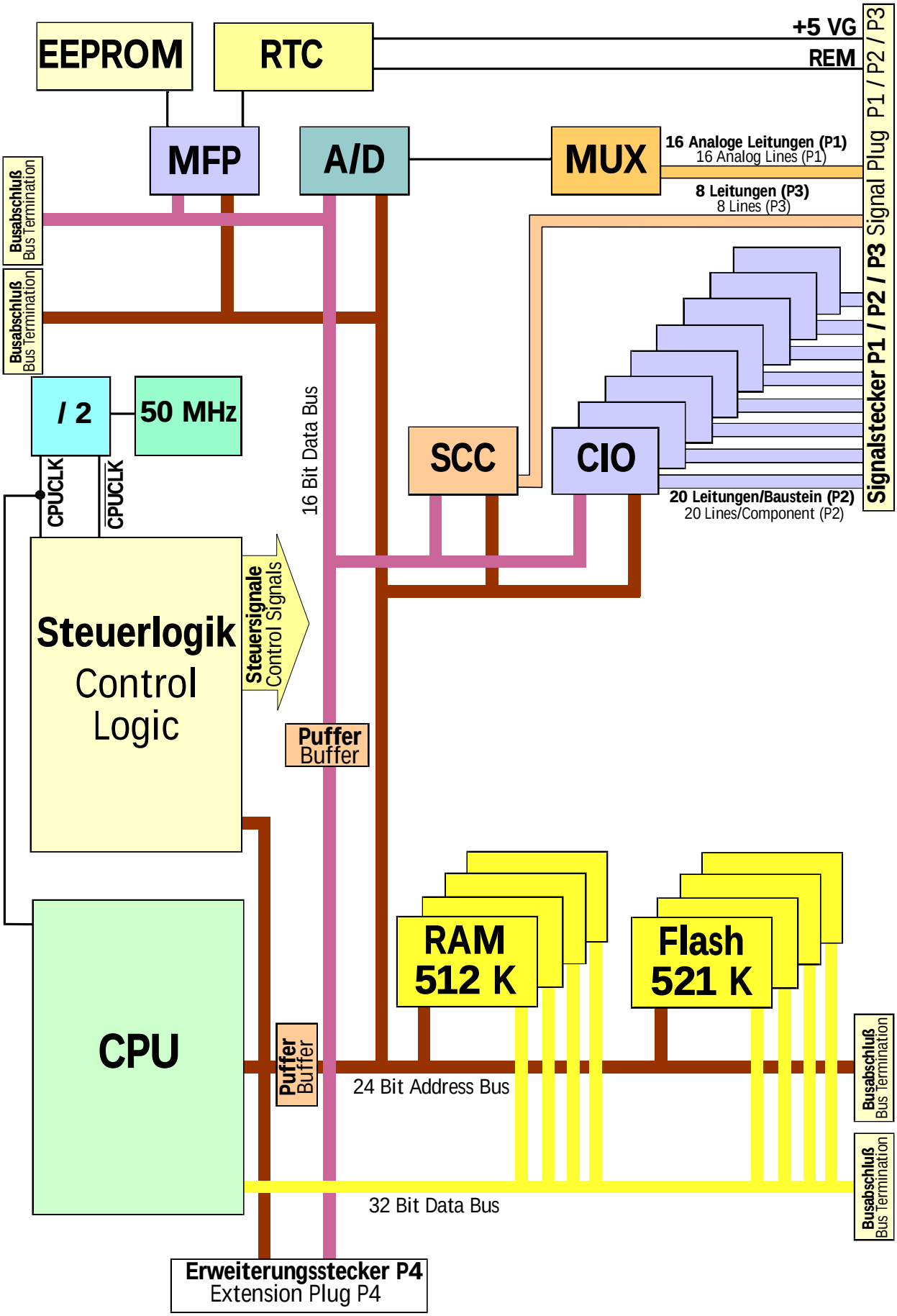

Fig. : Block Diagram Controller Board CB

2.35.2 Description Controller Board

Microprocessor

The low level controller board has the following components:

- CPU
- Clock Generator
- Control Logic
- Memory (RAM/Flash EPROM)
- Counter/Timer and Parallel I/O Ports **CIO**
- Serial Communication **SCC**
- AD Converter **AD**
- Multiplexer **MUX**
- System Clock Generation **MFP**
- E^2PROM
- Real Time Clock **RTC**
- Extension Connection, i.e. for Second Microprocessor

CPU

The 68020 CPU (central processing unit) has the following data:

- 32 Bit Processor
- 16 MB Address Range
- 32 Bit Data Bus (external)
- 24 Bit Address Bus

The 32 bit data bus is connected unbuffered to all memories and is shielded against the remaining peripheral by drive components. The data bus is terminated by special terminator components. Thereby the signals are terminated and in case of a tristate condition the last level is held.

The 24 bit address bus is buffered by drive components and is terminated by diodes, to prevent reflections. All control and clock lines that are connected to several consumers are terminated by RC elements.

Clock Generation

The clock generation for the microprocessor and control logic is generated from a 50 MHz oscillator. A D flip-flop generates two opposite phase clock signals of 25 MHz. Thereby the necessary phase accuracy and rise times for the microprocessor is achieved. For peripheral components a 4 MHz and a 2 MHz are generated by a second 8 MHz oscillator. All clock lines are terminated.

Control Logic

The control logic is responsible for decoding and access control. All signals required for decoding are unbuffered and come directly from the CPU and from an other microprocessor. The access control implements wait cycles depending on the addressed component.

Memory (RAM/Flash EPROM)

The memory has four flash EPROMs and four static RAMs. The memories are connected parallel to the data bus. Both memory work with a 32 bit data bus.

Counter/Timer and Parallel I/O Ports (CIO)

Eight parallel ports are available as CIO components (counter/timer/parallel inputs and outputs). The CIO components have the following parts:

- two 8 Bit Ports
- one 4 Bit Port
- three 16 Bit Timers

The ports can be operated in different modes.

Serial Communication (SCC)

A SCC component (serial communication controller) is available for serial communication. The two channel controller can handle asynchronous and synchronous protocols.

AD Converter AD

The analogue signals in the range of 0 to 5 V are converted by a 2 MHz triggered AD converter. A 16 channel multiplexer MUX is connected prior to the AD converter. All 12 bits are transmitted simultaneously to the DIABUS by a read command.

Multiplexer MUX

The inputs of the multiplexer are connected to the signal plug P2. The input voltage range is 0 to 5 V. The inputs are protected against over voltages of ±20 V.

System Clock Pulse Generator MFP

A multi function peripheral component MFP is available for the internal system clock generation. The MFP has the following parts:

- three 8 bit timers
- one serial channel
- eight in/out ports

A timer is pulsed with 3.68 MHz for the baud rate of the serial channels. Two timers are in series with the time basis of the software operating system. The serial interface is reserved for debugging information. The real time clock RTC and the serial E^2PROM are connected to the port pins.

E^2PROM

Specific parameters of the boards are stored in the serial E^2PROM.

Real Time Clock RTC

The alarm output of the real time clock RTC is directly connected to plug P3. The mains power supply can thereby be switched on automatically. The voltage supply is buffered by +5 VG in the mains power supply.

Extension Port

The available extension port is related to the signals parallel to the microprocessor. A second microprocessor could have access to the board via this port.

2.36 Power Board 1 PB1

2.36.1 Block Diagram Power Board 1

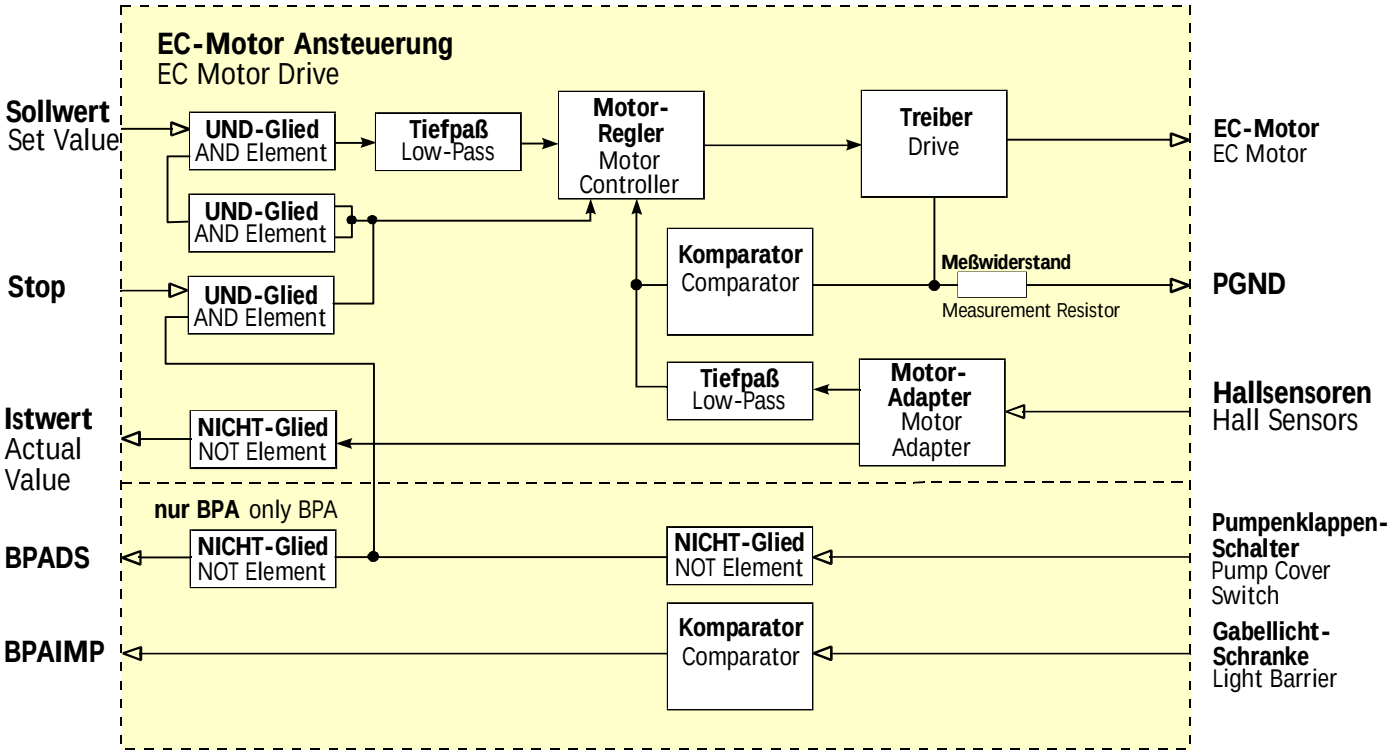

Fig. : Block Diagram Power Board 1

2.36.2 Description Power Board 1

Drive Circuit for Pumps

The following drive circuits for the d.c. motors are on power board 1:

- Arterial Blood Pump **BPA**
- Degassing Pump **EP**
- Outlet Flow Pump **FPA**
- Inlet Flow Pump **FPE**

The drives are controlled by the controller board via the supervisor board. The output signals are evaluated by the supervisor and controller board.

EC Motor with Hall Sensors

The electronic commutator d.c. motor has three hall sensors. The position of the magnetic rotors are detected with the hall sensors. The three phase motionless coils are fed with current according to the position of the rotors. The motor adapter detects the revolution. The speed dependent output signal is pulse width modulated. The sensitive degree and frequency are speed proportional. The signal is fed to the motor controller via a passive and active low-pass filter.

Asynchronous Actual Speed BPAIST_US Signal of Arterial Blood Pump

The BPAIST_US signal is generated by a NOT element from the speed dependent output signal of the motor adapter.

Stop BPASTOP Signal of Arterial Blood Pump

The EC motor can be stopped by the BPASTOP signal or by opening the pump cover. If the BPASTOP signal has logic 1, the EC motor is stopped.

Cover Switch BPADS Signal of Arterial Blood Pump

A permanent magnet is integrated in the pump cover. If the pump cover is closed a reed contact is closed. This signal is linked with the BPASTOP signal after a comparator and fed to the motor controller. If the pump cover is opened the motor is switched off.

BPAIMP Signal of Arterial Blood Pump

The supervisor monitors the rotation of the arterial blood pump BPA via a slot disc. The slot disc runs in a fork light barrier. The post comparator generates the BPAIMP signal.

BPA Signal of Arterial Blood Pump

The set-point value for the speed of the EC motor is available as a pulse width modulated (PWM) BPA signal. The BPA signal is converted to an analogue voltage by a low-pass filter and fed to the motor.

Current Limitation of EC Motor

A voltage which is proportional to a coil of the EC motor is present at a measurement resistance. A comparator compares this voltage with a reference voltage. The reference voltage is equivalent with the maxium motor current. The voltage of the measurement resistance is fed to a comparator via a low-pass filter. The low-pass filter prior to the comparator prevents an activation of the current limitation during short period load peaks of the EC motor.

Signals

Input Signals	Description	Signal Type
BPA	Set-point value for motor speed of arterial blood pump	PWM signal
FPE	Set-point value for motor speed of inlet flow pump	PWM signal
FPA	Set-point value for motor speed of outlet flow pump	PWM signal
EP	Set-point value for motor speed of degassing pump	PWM signal
PUMP STOP	Start/stop signal	Logic 1=Stop
HS1	Hall sensor signal (integrated in motor)	-
HS2	Hall sensor signal (integrated in motor)	-
HS3	Hall sensor signal (integrated in motor)	-
Output Signals	**Description**	**Signal Type**
-IST	Proportional frequency signal for motor speed	-
BPADS	Pump cover position of arterial blood pump (BPA)	Logic 1= cover closed
BPAIMP	Processed signal of fork light barrier	-
L1	Coil control	-
L2	Coil control	-
L3	Coil control	-

2.37 Power Board 2 PB2

2.37.1 Block Diagram Power Board 2

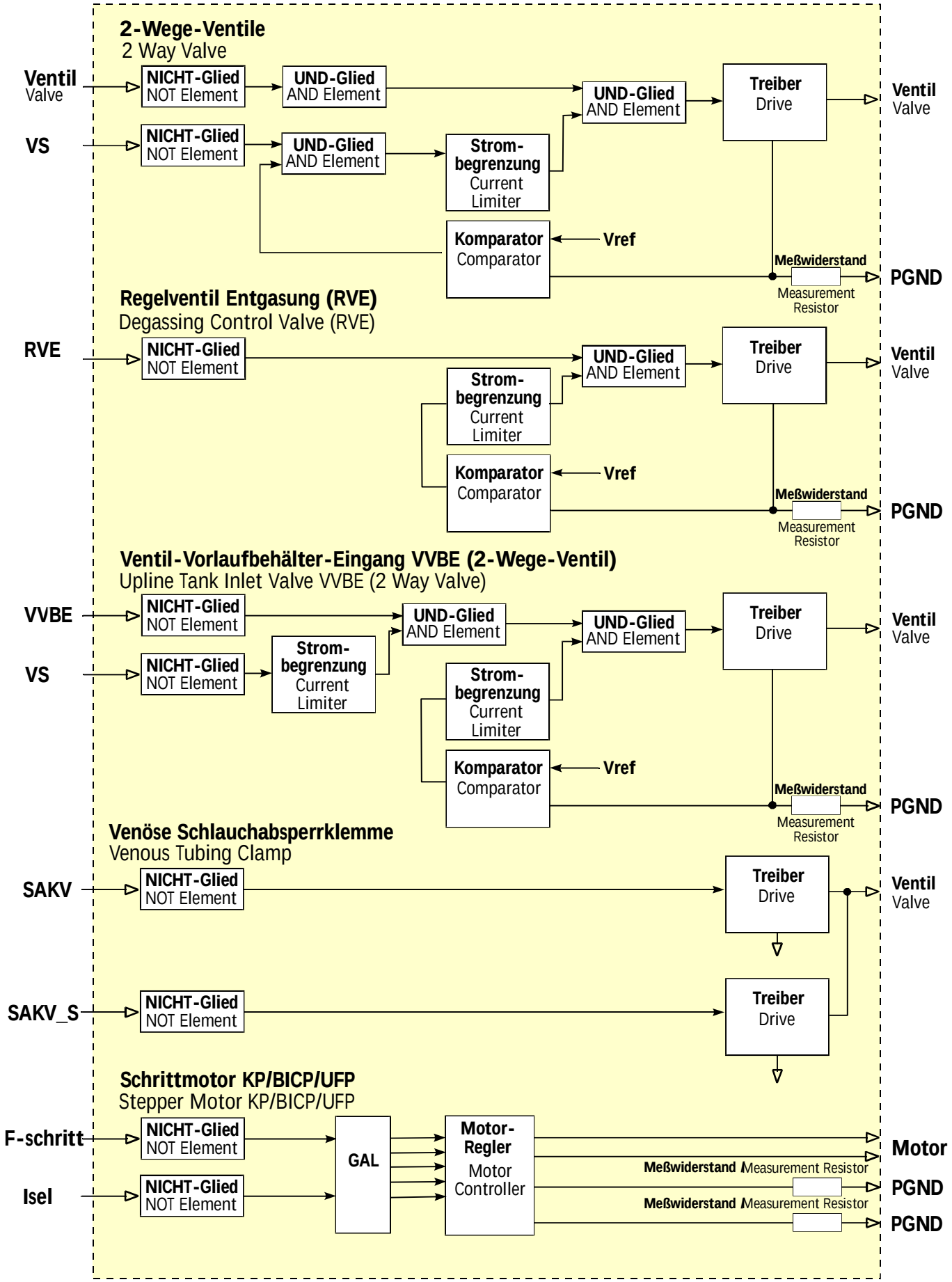

Fig. : Block Diagram Power Board 2

2.37.2 Description Power Board 2

Circuit Power Board 2 Drives

Drive circuits are on the power board 2 for the following actuators:

- 15 2 way solenoid valves
- one proportional control valve
- one tubing clamp
- three bipolar stepper motors

The 2 way valves are used e.g.:

- To control the inlet/outlet of the balance chambers
- To switch the dialysate flow between main and by-pass

The proportional valve controls the degassing pressure

The stepper motors are used for:

- Concentrate pump
- Ultrafiltration pump

The drives are controlled by logic signals from the supervisor and controller board.

Driver 2 Way Valve

Each valve has a current limitation (mono-flop) integrated in the driver. The current limitation can be activated/deactivated by the VS signal. The valve current is determined indirectly via a voltage drop over a measurement resistor. The measurement resistor is in series with the valve coils. The voltage is compared with a reference voltage at a comparator. If the valve current reaches a limit value the output signal of the comparator switches and triggers a mono-flop. The current is cut-off for a short time, thus preventing an over load of the valves.

Driver 2 Way Valve VVBE

The driver for the upline tank inlet valve VVBE has an additional watchdog. The watchdog is triggered by a negative edge pulse of the VS signal. If the signal is not switched the valve closes after approx. 1.5 s. Thus an over flow of the upline tank is prevented.

Driver Proportional Valve

The proportional valve is driven by a pulse width signal. The current in the valve coil is controlled. The design of the current limitation is identical with the 2 way valve.

Driver Tubing Clamp

The SAKV and SAKVS signals for the tubing clamp are fed to switch transistors via an inverter. The switch transistors can close the clamp independently.

Driver Stepper Motor

The drive for the stepper motor has a GAL (generic array logic) and an integrated motor controller. The GAL generates the logic signals for the motor controller from the frequency signal of the stepper motor and the control signal of the coil current. The motor controller has an internal phase current limiter. The motor coil is thereby constant.

Signals

Input Signals	Description	Signal Types
SAKV	Switch signal for tubing clamp (controller)	Logic 1=Clamp open
SAKVS	Switch signal for tubing clamp (supervisor)	Logic 1=Clamp open
VB1	Switch signal for 2 way valve	Logic 1=Valve closed
VB2	Switch signal for 2 way valve	Logic 1=Valve closed
VB3	Switch signal for 2 way valve	Logic 1=Valve closed
VLA	Switch signal for 2 way valve	Logic 1=Valve closed
DV	Switch signal for 2 way valve	Logic 1=Valve closed
DV1	Switch signal for 2 way valve	Logic 1=Valve closed
VE1	Switch signal for 2 way valve	Logic 1=Valve closed
VE2	Switch signal for 2 way valve	Logic 1=Valve closed
VA1	Switch signal for 2 way valve	Logic 1=Valve closed
VA2	Switch signal for 2 way valve	Logic 1=Valve closed
VDE1	Switch signal for 2 way valve	Logic 1=Valve closed
VDE2	Switch signal for 2 way valve	Logic 1=Valve closed
VDA1	Switch signal for 2 way valve	Logic 1=Valve closed
VDA2	Switch signal for 2 way valve	Logic 1=Valve closed
VS	Current limitation for 2 way valve	Logic 1=Valve current not limited
RVVB	Control proportional valve	PWM signal
RVE	Control proportional valve	PWM signal
BICP	Control Stepper motor	Frequency signal
KP	Control Stepper motor	Frequency signal
UFP	Control Stepper motor	Frequency signal
IBICP	Control stepper motor	Logic 1=large Coil current
IKP	Control stepper motor	Logic 1=large Coil current
IUFP	Control stepper motor	Logic 1=large Coil current
Output Signals	**Description**	**Signal Type**
ventil-IST	Actual value switch condition of 2 way valve	Logic 1=Valve closed
schritt-POS	Reed contact signal on the axis of the stepper motor	-
-Q11	Connection for stepper motor coil	-
-Q12	Connection for stepper motor coil	-
-Q21	Connection for stepper motor coil	-
-Q22	Connection for stepper motor coil	-
ventil-	Connection for valves	-

2.38 Heparin Pump Compact

2.38.1 Block Diagram Heparin Pump Compact

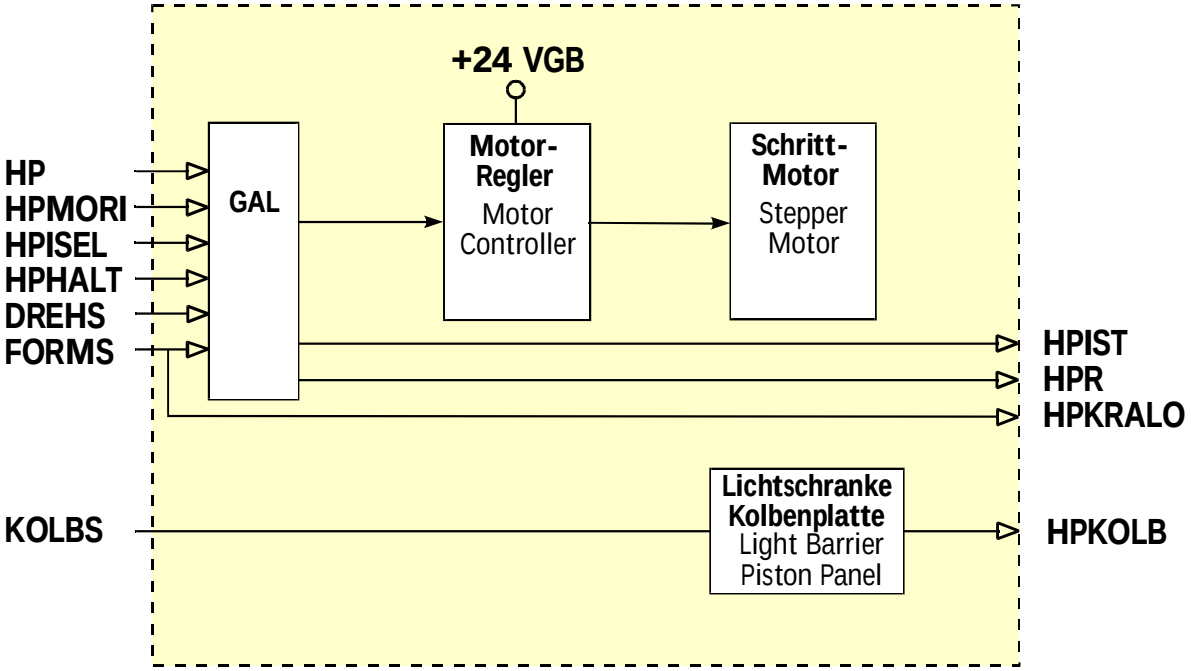

Fig. : Block Diagram Heparin Pump Compact

2.38.2 Description Heparin Pump Compact

Stepper Motor

The stepper motor is controlled by a motor controller and a GAL (generic array logic). The logic signals for the motor controller are generated from:

- Direction of rotation HPMORI signal
- Step frequency HP signal
- Coil current HPHALT and HPISEL signal

The stepper motor works in a half step mode. An internal phase current limiter of the motor controller is kept constant depending of the sensor resistors.

The current of the stepper motor can be set by the HPISEL and HPHALT inputs.

The internal stop signal of the motor is linked with the following signals:

- Positive locking signal FORMS
- Direction of rotation signal HPR
- Stop signal HPHALT

The motor control is switched off if HPHALT is active or the positive locking is opened and the direction of rotation is set to closing.

Speed Recognition

After processing the DREHS signal with a schmitt-trigger (signal of the light barrier for detection of rotation) it is fed to a GAL. The level is only transferred with a pulse from HP. Thus mechanical vibrations of the slot disc are filtered, and the output signal is HPIST.

Plunger Plate, Positive Locking

The plunger plate signal KOLBS and the positive locking signal FORMS for the light barrier signals are processed with a schmitt-trigger and are available as output signals HPKOLB and HPKRALO.

Syringe Sizes

Syringe sizes of 10, 20 and 30 ml can be used in the heparin pump Compact.

Signals

Signal	Description	Signal Type
HP	Set-point frequency for stepper motor	Step is performed at falling edge
HPR	Direction of rotation via slot disc of stepper motor	Logic 1=Drive running
HPHALT	Setting of the phase current for the stepper motor driver	Logic 1=Stop=Phase current stepper motor = 0 (INH of TCA3727)
HPIST	Signal of the light barrier at motor	Updated only with HP pulse
HPKRALO	Status of claw	Logic 1=Positive locking is open
HPKOLB	Status of plunger plate	Logic 1 = Plunger plate ist pressed
HPMORI	Direction of rotation of stepper motor	Logic 1 = Drive opening
HPISEL	Setting of the phase current for the stepper motor driver	Logic 0=100% current Logic 1=66% current

2.39 Single Needle Cross Over

2.39.1 Block Diagram SN Cross Over

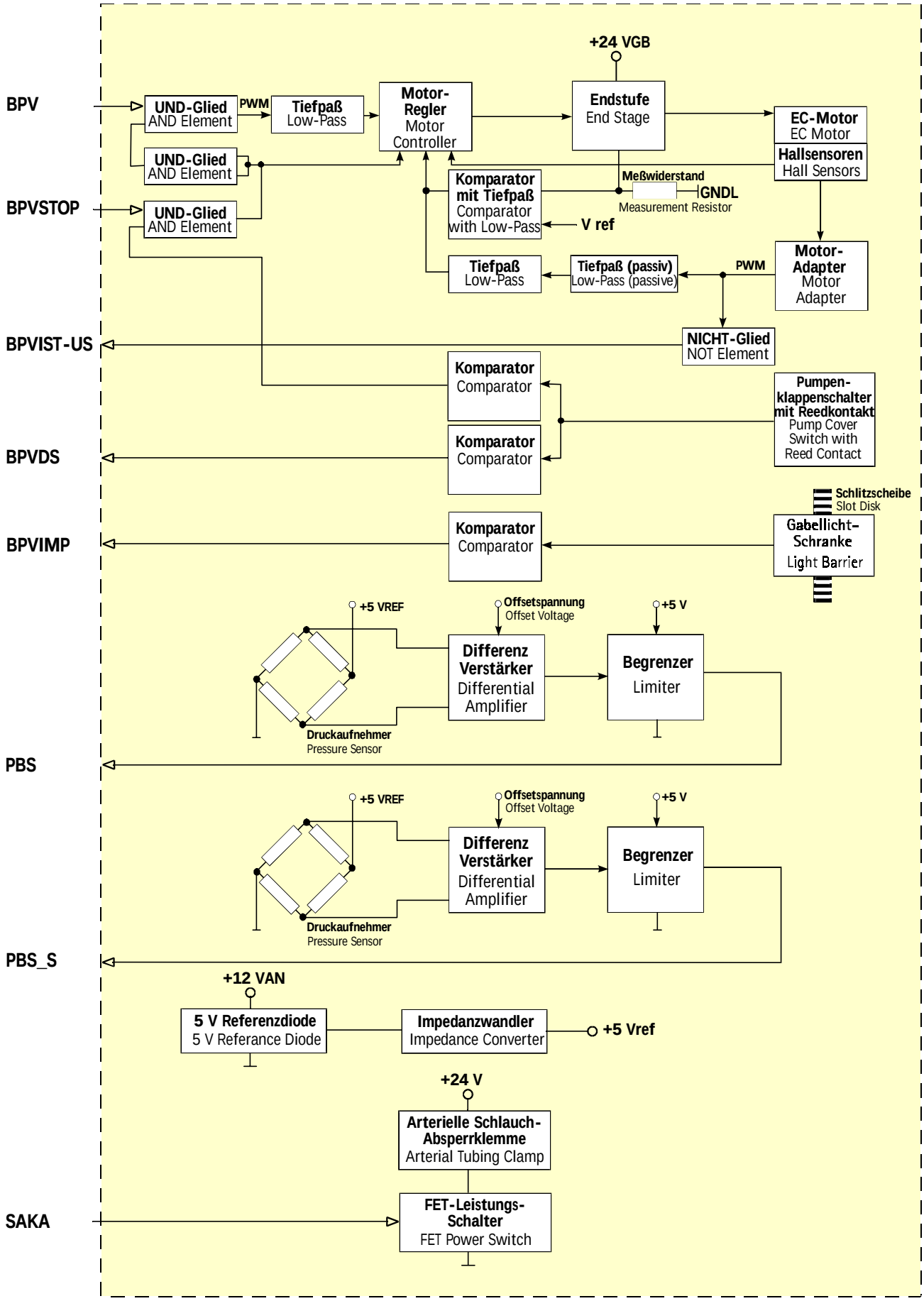

Fig. : Block Diagram SN Cross Over

2.39.2 Description SN Cross Over

EC Motor with Hall Sensors

The electronic commutator d.c. motor has three hall sensors. The position of the magnetic rotors are detected with the hall sensors. The three phase motionless coils are fed with current according to the position of the rotors. The motor adapter detects the revolution. The speed dependent output signal is pulse width modulated. The sensitive degree and frequency are speed proportional. The signal is fed to the motor controller via a passive and active low-pass filter.

Stop BPVSTOP Signal of Venous Blood Pump

The EC motor can be stopped by the BPVSTOP signal or by opening the pump cover. If the BPVSTOP signal has logic 1, the EC motor is stopped.

Cover Switch BPVDS Signal of Venous Blood Pump

A permanent magnet is integrated in the pump cover. If the pump cover is closed a reed contact is closed. This signal is linked with the BPVSTOP signal after a comparator and fed to the motor controller. If the pump cover is opened the motor is switched off.

BPVIMP Signal of Venous Blood Pump

The supervisor monitors the rotation of the venous blood pump BPV via a slot disc. The slot disc runs in a fork light barrier. The post comparator generates the BPVIMP signal.

BPV Signal of Venous Blood Pump

The set-point value for the speed of the EC motor is available as a pulse width modulated (PWM) BPV signal. The BPV signal is converted to an analogue voltage by a low-pass filter and fed to the motor.

Current Limitation of EC Motor

A voltage which is proportional to a coil of the EC motor is present at a measurement resistance. A comparator compares this voltage with a reference voltage. The reference voltage is equivalent with the maxium motor current. The voltage of the measurement resistance is fed to a comparator via a low-pass filter. The low-pass filter prior to the comparator prevents an activation of the current limitation during short period load peaks of the EC motor.

PBS and PBSS Signals of Single Needle Pressure Sensors

Each pressure sensor has a resistance bridge. The resistance value changes in accordance with the present pressure value. A constant +5 VREF is connected to the bridge.

- The measurement signal is tapped and amplified in the differential amplifier
- An offset voltage is added to lift the zero point. Thereby the measurement range of the AD converter has an optimal working condition.
- The voltage is limited to +5 V by a clamp circuit on the output, in the event of a fault condition. Thereby a damage of the following circuit components is prevented.

SAKA Signal of Arterial Tubing Clamp

The arterial tubing clamp is activated by the SAKA signal via a FET transistor.

2.40 Staff Call (Option)

2.40.1 Block Diagram Staff Call

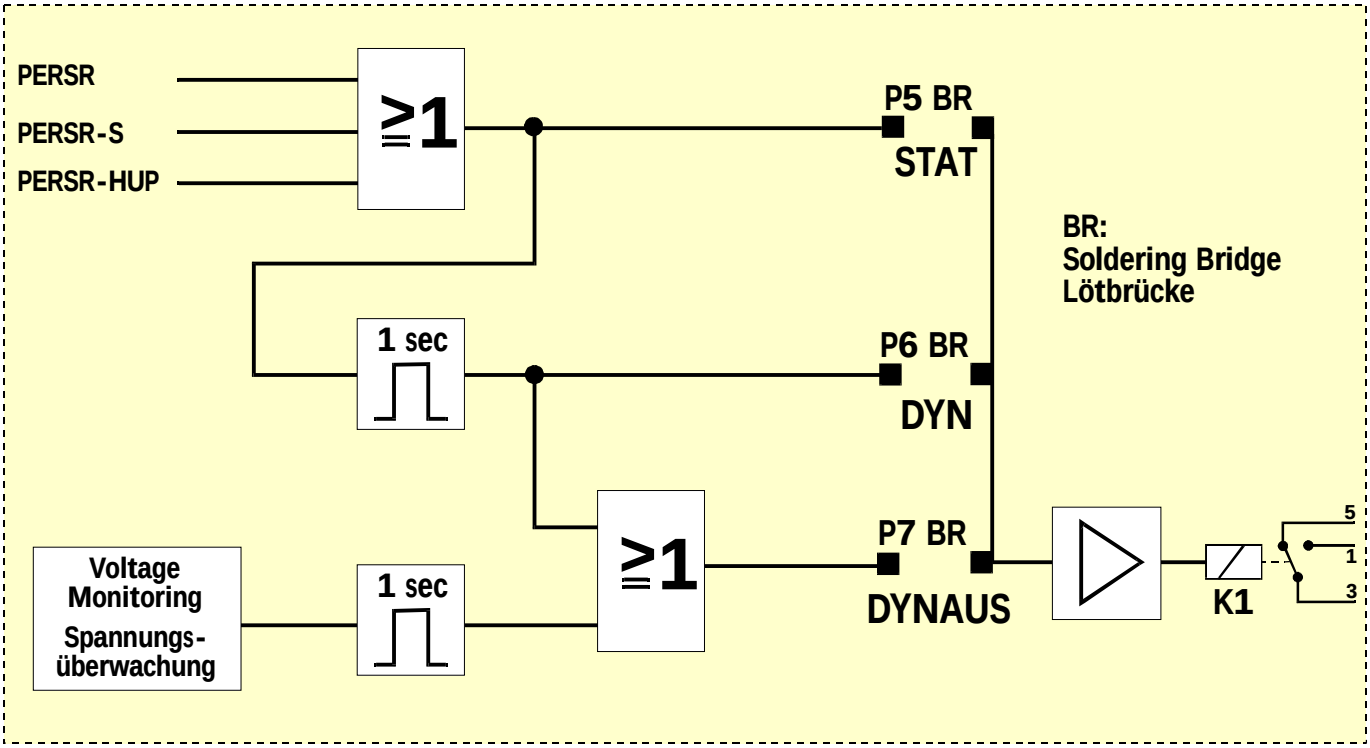

Fig. : Block Diagram Staff Call

2.40.2 Description Staff Call

Operating Modes

The operating modes static without OFF alarm, dynamic without OFF alarm or dynamic with OFF alarm are set with soldering bridges on the staff call board. The default setting ex works is static without OFF alarm.

P5BR: static without OFF alarm (default)

P6BR: dynamic without OFF alarm

P7BR: dynamic with OFF alarm

Static without Off Alarm

The relay K1 switches as long as one of the three inputs PERSR-S, PERSR-HUP or PERSR are active.

Dynamic without Off Alarm

If at least one input PERSR-S, PERSR-HUP or PERSR changes from active to inactive the relay K1 is switched for 1 second. The mono-flop U1 generates a switch time of one second.

Dynamic with Off Alarm

If at least one input PERSR-S, PERSR-HUP or PERSR changes from active to inactive the relay K1 is switched for 1 second or if the + 12 VD voltage drops more than 10 %. The mono-flop U1 generates a switch time of one second. The supply voltage for the staff call circuit is decoupled by the diode V1 from the +5 V voltage and buffered by a 1 F capacitor C1.

2.40.3 Operating Modes Staff Call System

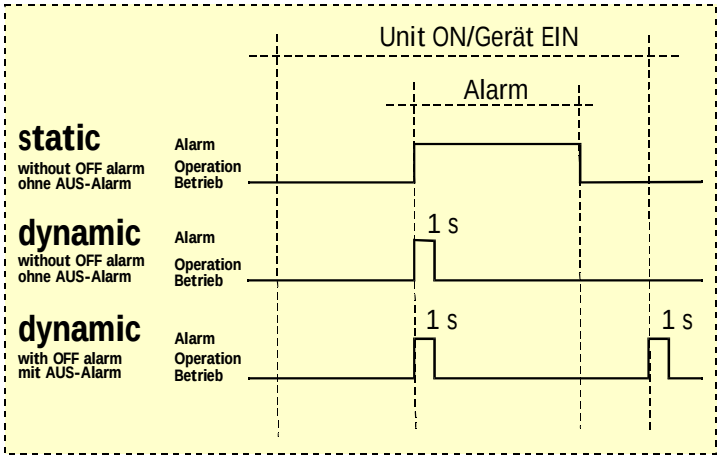

Fig. : Operating Modes Staff Call System

Press the / key to reset the alarm in the operating mode **static without OFF alarm**.

Signals:

PERSR-S	Staff call input of low level supervisor LLS
PERSR	Staff call input of low level controller LLC
PERSR-HUP	Staff call input of power supply
	(This line is also active if the mains power supply buzzer is switched on or if there is no WD level change in 0.7 s.)

2.40.4 Block Diagram Alarm Monitoring

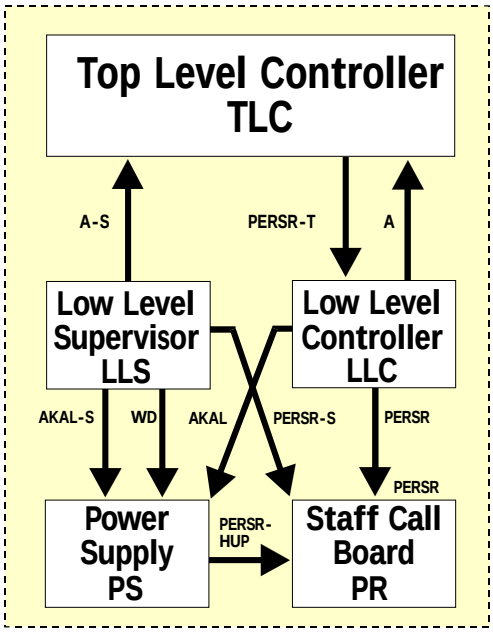

Fig. : Block Diagram Alarm Monitoring Staff Call

Legend:

A:	LLC alarms (by data transmission)
A-S:	LLS alarms (by data transmission)
AKAL:	LLC audible alarm
AKAL-S:	LLS audible alarm
PERSR-T:	TLC staff call (by data transmission)
PERSR:	LLC staff call (hardware)
PERSR-S:	LLS staff call (hardware)
PERSR-HUP:	Voltage supply staff call (hardware)
WD:	LLS watchdog connection (hardware)

2.40.5 Pin Assignment

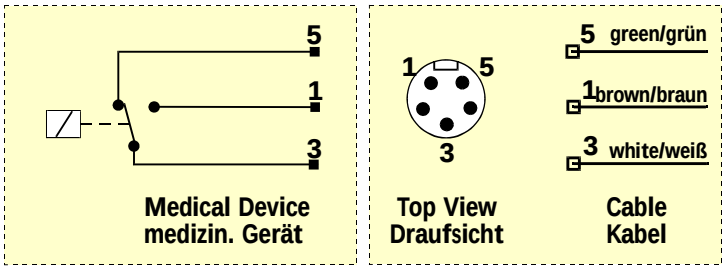

Fig. : Pin Assignment Staff Call Connector

The pin assignment is shown in the figure.

Alarm Table:

	Connector	Cable
Alarm	1-3	white-brown
Operation	3-5	white-green

2.41 Switch Mode Power Supply SMPS (Benning)

2.41.1 Block Diagram Switch Mode Power Supply

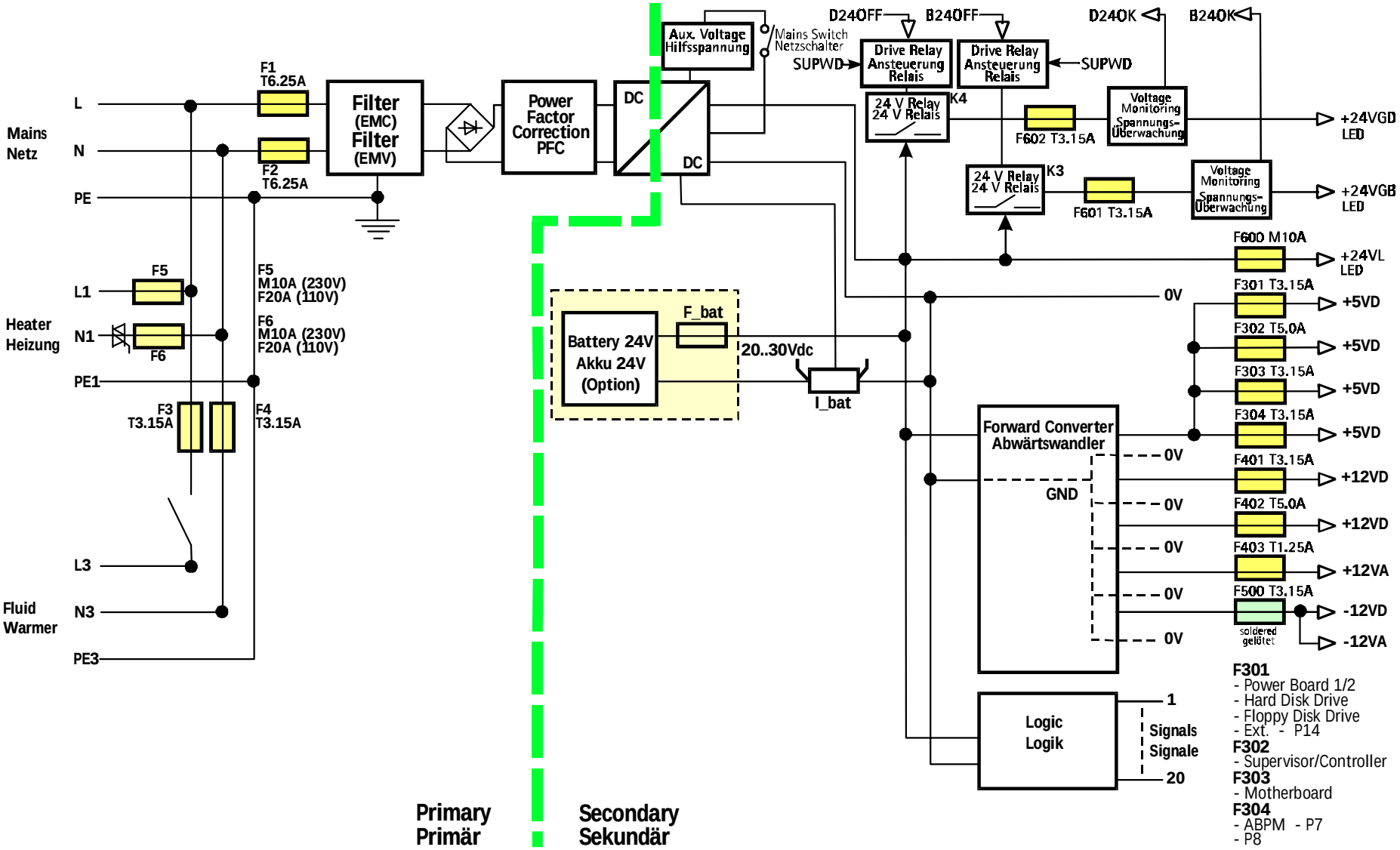

Fig. : Block Diagram Switch Mode Power Supply SMPS

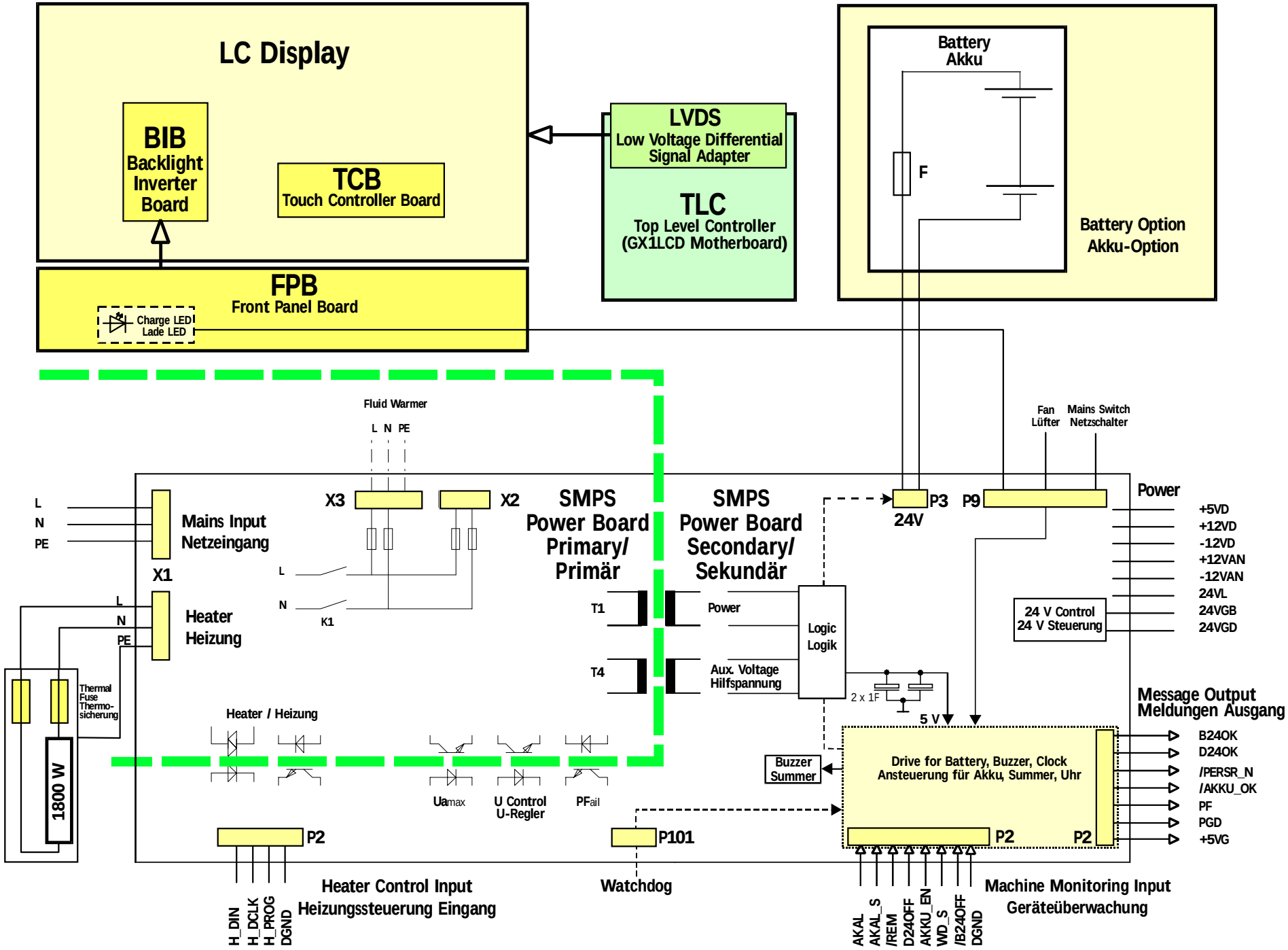

Fig. : System Integration

2.41.3 Layout Switch Mode Power Supply SMPS

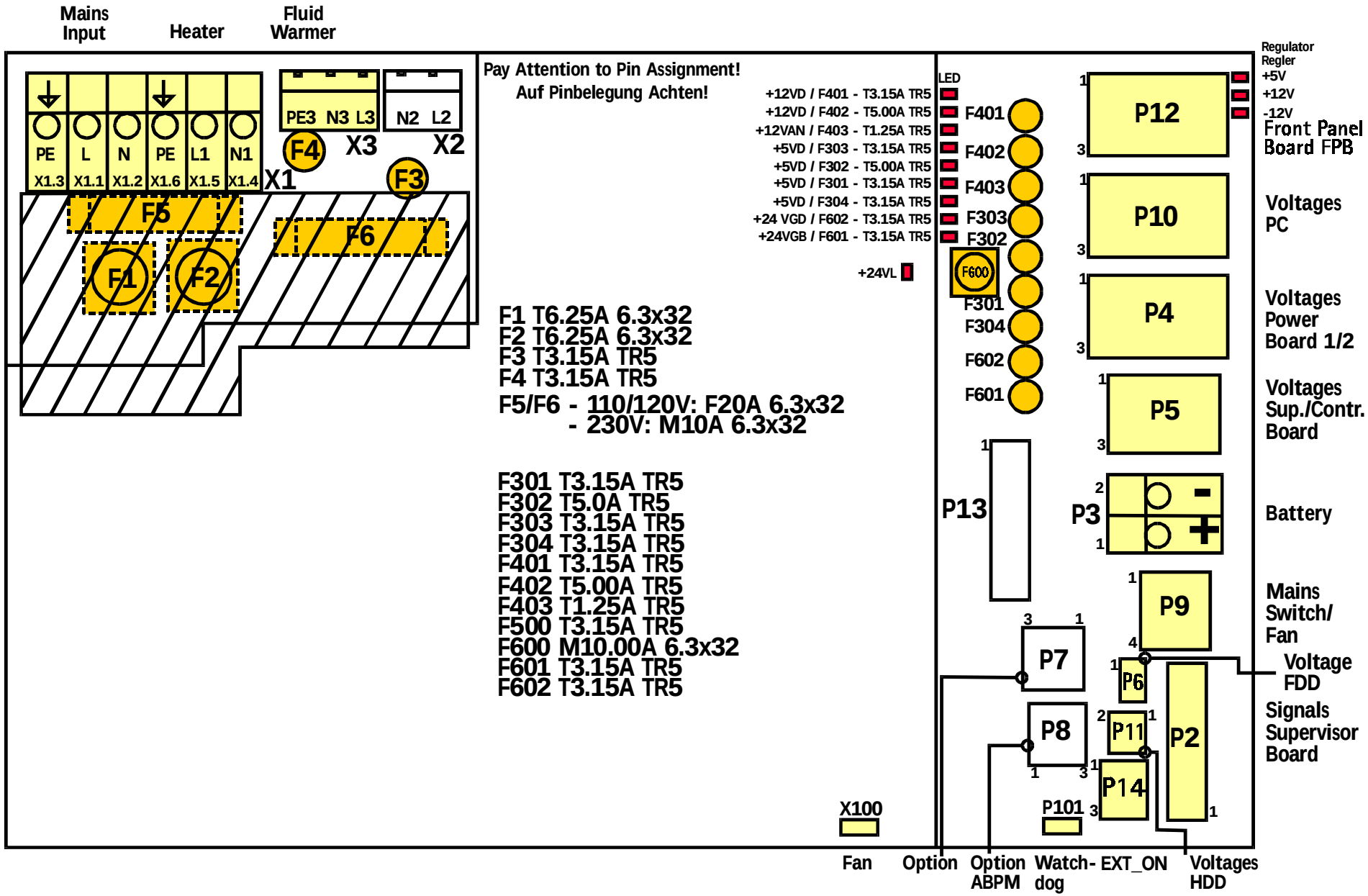

Fig. : Layout Switch Mode Power Supply SMPS

2.41.4 Wiring Diagram Switch Mode Power Supply SMPS with Battery Option

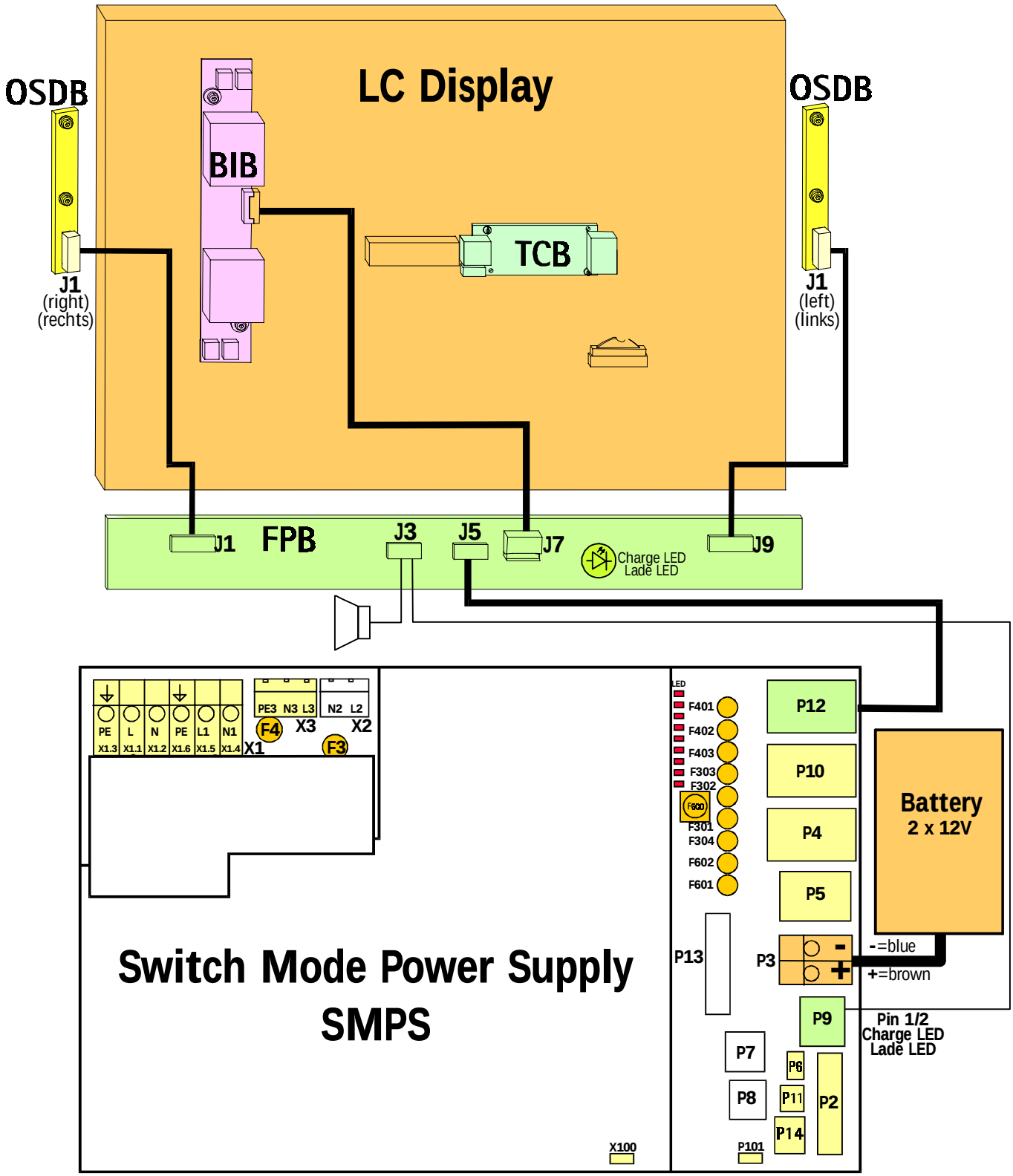

Fig. : Wiring Diagram Switch Mode Power Supply SMPS with Battery Option

2.41.5 Description Switch Mode Power Supply

The switch mode power supply SMPS is assembled in the rear door.

The battery option can be retrofitted in a Dialog+.

Rated Voltage: 110/120/230/240 V 50/60 Hz

Fuses:

F1/F2	6.25 AT (6.3x32)	Mains input
F3/F4	3.15 AT (TR5)	Fluid warmer
F5/F6	230/240 V: 10 AM (6.3x32) 110/120 V: F20 A (6.3x32)	Heater 1800 W/240 V Heater 1800 W/110/120 V
F301	3.15 AT (TR5)	+5 VD
F302	5.00 AT (TR5)	+5 VD
F303/F304	3.15 AT (TR5)	+5 VD
F401	1.25 AT (TR5)	+12 VD
F402	5.00 AT (TR5)	+12 VD
F403	1.25 AT (TR5)	+12 VAN
F600	10 AM (6,3x32)	+24 VL
F601/F602	3.15 AT (TR5)	+24 VGB

Filter (EMC) The filter is required for EMC measures (EMC = electromagnetic compatibility).

Power Factor Correction PFC PFC circuits are used for switch mode power supplies and ensure that the line current is drawn sinusoidally and in phase with the sinusoidal line voltage.

Forward Converter The forward converter (Buck converter also called down switcher) converts an input voltage into a lower output voltage, i.e. the 24 V is converted into ±12 V and +5 V.

2.41.6 Pin Assignment Switch Mode Power Supply

P2 – Signals to Supervisor Board

Pin	Signal	Description	I/O	Pin	Signal	Description	I/O
1a	PF	Power Fail	O	**1b**	B24OFF_S	Switch-off 24 V supervisor blood side	I
2a	/REM	Remote control power supply	I	**2b**	D24OFF_S	Switch-off 24 V supervisor dialysate side	I
3a	WD_S	Supervisor WATCHDOG	I	**3b**	AKAL	Audible alarm	I
4a	nc		I	**4b**	AKAL_S	Audible alarm supervisor	I
5a	nc			**5b**	+5VG	Voltage supply for clock on controller board	O
6a	H_DIN	Data for shift register	I	**6b**	PERSR_N	Signal to activate the staff call	O
7a	EXT_STATE	Status for external switch-on possibility	O	**7b**	AKKU_EN	Enable battery operation	I
8a	B24OK	Voltage monitoring blood side	O	**8b**	D24OK	Voltage monitoring dialysate	O
9a	H_DCLK	Clock to load shift register	I	**9b**	H_PROG	Programming mode for shift register	I
10a	/AKKU_OK	Battery status	O	**10b**	GND		

P3 - Battery Connection (Screw Terminal)

Pin	Signal	Type	Description	Tolerance	Current [A]
1	+24VAKKU	stabilised	Charge and discharge current	21 V ... 28 V	15
2	GNDAKKU		Ground power		

P4 - Voltage Supply Power Board 1/2

Pin	Signal	Type	Description
1	+5VD	stabilised	+5 V digital (PB1)
2	GNDD		Ground digital (PB1)
3	-12VAN	stabilised	-12 V analogue (PB1)
4	+5VD	stabilised	+5 V digital (PB2)
5	GNDD		Ground digital (PB2)
6	GNDL		Ground power (PB1)
7	+12VAN	stabilised	+12 V analogue (PB1)
8	GNDL		Ground power (PB1)
9	GNDL		Ground power (PB2)
10	+24VL	rectified	+24 V power (PB1)
11	+24VGB	rectified	+24 V switched blood (PB1)
12	+24VGD	rectified	nc (PB1); +24 V switched dialysate (PB1)
13	+24VL	rectified	+24 V power (PB2)
14	+24VGB	rectified	+24 V switched blood (PB2)
15	+24VGD	rectified	+24 V switched dialysate (PB2)

P5 - Voltage Supply Supervisor/Controller Board

Pin	Signal	Type	Description
1	+12VAN	stabilised	+12 V analogue
2	-12VAN	stabilised	-12 V analogue
3	GNDAN		Ground analogue
4	+12VD	stabilised	+12 V digital
5	-12VD	stabilised	-12 V digital
6	GNDD		Ground digital
7	+24VGB	20...30 V	+24 V switched blood side
8	+24VL	20...30 V	+24 V power
9	GNDL		Ground power
10	+5VD	stabilised	+5 V digital
11	GNDD		Ground digital
12	GNDL		Ground power

P6 - 3½" Floppy Disk Drive

Pin	Signal	Type	Description
1	+5VD	stabilised	+5 V digital
2	GNDD		Ground digital

P7 - Voltage Supply Options

Pin	Signal	Type	Description
1	+5VD	stabilised	+5 V digital
2	nc		
3	GNDD		Ground digital
4	+12VD	stabilised	+12 V digital
5	-12VD	stabilised	-12 V digital
6	GNDD		Ground digital
7	+12VAN	stabilised	+12 V analogue
8	-12VAN	stabilised	-12 V analogue
9	GNDAN		Ground analogue

P8 - Voltage Supply Option ABPM
(Automatic Blood Pressure Measurement)

Pin	Signal	Type	Description
1	+5VD	stabilised	+5 V digital
2	nc		
3	GNDD		Ground digital
4	+12VD	stabilised	+12 V digital
5	-12VD	stabilised	+12 V digital
6	GNDD		Ground digital
7	+12VAN	stabilised	+12 V analogue
8	-12VAN	stabilised	-12 V analogue
9	GNDAN		Ground analogue

P9 - Mains Switch and Voltage Supply Fan

Pin	Signal		Description
1	AKKU_Laden		Display "Charge Battery"
2	GND		Digital ground
3	Mains Switch		Logic (1st level)
4	Mains Switch		+12 VH (1st level)
5	+12VD		+12 V digital (fan)
6	+12VD		+12 V digital (fan)
7	Mains Switch		Logic (2nd level)
8	nc		
9	GND		Digital ground (fan)
10	GND		Digital ground (fan)
11	Mains Switch		GNDH (2nd level)
12	nc		

P10 - Voltage Supply PC

Pin	Signal	Type	Description
1	+5VD	stabilised	+5 V digital
2	nc		
3	GNDD		Ground digital
4	+5VD	stabilised	+5 V digital
5	nc		Coding
6	GNDD		Ground digital
7	+5VD	stabilised	+5V digital
8	nc		
9	GNDD		Ground digital
10	+12VD	stabilised	+12 V digital
11	nc		
12	GNDD		Ground digital
13	-12VD	stabilised	-12 V digital
14	+12VD	stabilised	+12 V digital
15	GNDD		Ground digital

P11 - Voltage Supply Hard Disk Drive

Pin	Signal	Type	Description
1	+5VD	stabilised	+5 V digital
2	+12VD	stabilised	+12 V digital
3	GNDD		Ground digital
4	GNDD		Ground digital

P12 - Voltage Supply Options

Pin	Signal	Type	Description
1	+5VD	stabilised	+5 V digital
2	+12VD	stabilised	+12 V digital
3	GNDD		Ground digital
4	+12VAN	stabilised	+12 V analogue
5	-12VD	stabilised	-12 V digital
6	GNDD		Ground digital
7	-12VAN	stabilised	-12 V analogue
8	GNDAN		Ground analogue
9	GNDD		Ground digital
10	+24VL	20 ... 30 V	+24 V power
11	nc		Coding
12	GNDL		Ground power
13	+24VGB	20 ... 30 V	+24 V switched blood
14	+24VGD	20 ... 30 V	+24 V switched dialysate
15	GNDL		Ground power

P13 - Connection Monitor Booster

Pin	Signal	Type	Description
1	+24 V (20 .... 28 V		
2	GNDD		Ground digital
3	/HSS_ON		
4	GNDD		Ground digital

P14 - Input Signal /EXT_ON
(Switch-on machine from external source)

Pin	Signal	Type	Description
1	GNDD		Ground digital
2	/EXT_ON		Open collector input
3	EXT_STATE		Input
4			
5			
6	+5VD		+5 V digital

Screw Terminal:

X1 - Mains Input, Heater

Pin	Voltage
1.1	L
1.2	N
1.3	PE
1.4	N1
1.5	L1
1.6	PE

X3 - Fluid Warmer, Relay Monitor Booster

Pin	Voltage
3.1	L3
3.2	N3
3.3	PE3

Inputs:

Mains Switch	2nd level
H_DIN	Data for shift register and watchdog controller
WD_S	Watchdog supervisor
/REM	Remote (clock on controller board)
AKAL	Audible alarm (controller)
AKAL_S	Audible alarm (supervisor)
MSWITCH	Mains switch
B24OFF	+24 VGB ON/OFF (supervisor)
D24OFF	+24 VGD ON/OFF (supervisor)
H_DCLK	Clock for programming shift register
H_PROG	Programming mode shift register
AKKU_EN	Enable battery operation (only possible in therapy mode)
Rated Mains Voltage	110/230 V 50/60 Hz
/EXT_ON	The machine can be switched on with this signal (see menu 1.26 Battery Option: external *ON*).
EXT_STATE	Status for external switch-on possibility (e.g. central disinfection), simultaneously input and output; the signal is looped through (connector P14/3 = input).

Outputs:

B24OK *+24VGB* OK

D24OK *+24VGD* OK

PERSR_N Staff call

/AKKU_OK Load status of the battery

PF Power fail (power failure)

Connections Fluid warmer, heater

Voltages

+5 VD:	Digital
±12 VD:	Digital
±12 VAN:	Analog
+24 VL:	Power (non-regulated)
+24 VGB:	Switched blood side
+24 VGD:	Switched dialysis side

EXT_STATE External machine switch-on (information for TLC), simultaneously input and output; the signal is only looped through (connector P2/7a = output).

Mains Switch ON/OFF If the Dialog+ is switched off via the *Automatic Switch-Off* function in therapy the machine is in standby mode, e.g. the Dialog+ can be switched on and off via the disinfection program.

The Dialog+ is only disconnected from mains if the mains plug is pulled out of the mains socket.

Standby The power consumption is ≤ 10 W in standby mode.

H_PROG The *H_PROG* signal is an open-collector signal and is generated by the LLC.

0 No programming mode: Data rotate in shift register

1 Programming mode: Shift register can be written

H_DIN The *H_DIN* signal is an open-collector signal and is generated by the LLC (data for the shift register to drive the heater).

0 Half-wave of mains voltage for heater switched off

1 Half-wave of mains voltage for heater switched on

H_DCLK The *H_DCLK* signal is an open-collector signal and is generated by the LLC. The pending data at *H_DIN* are shifted into the shift register with the *H_DCLK* signal to drive the heater.

0, **1** Rectangular signal to shift the data into the shift register

Watchdog A watchdog is integrated to prevent a permanent unitentional drive of the heater in case of a LLC reset. The watchdog is retriggered by the LLC with < 2 s. The *H_DIN* signal is used for triggering. After switching on the switch mode power supply the watchdog prevents a drive of the heater for t = 10 s.

The watchdog has no safety function and is therefore not tested before the therapy starts.

2.42 Safety Concept

2.42.1 Block Diagram Safety Concept

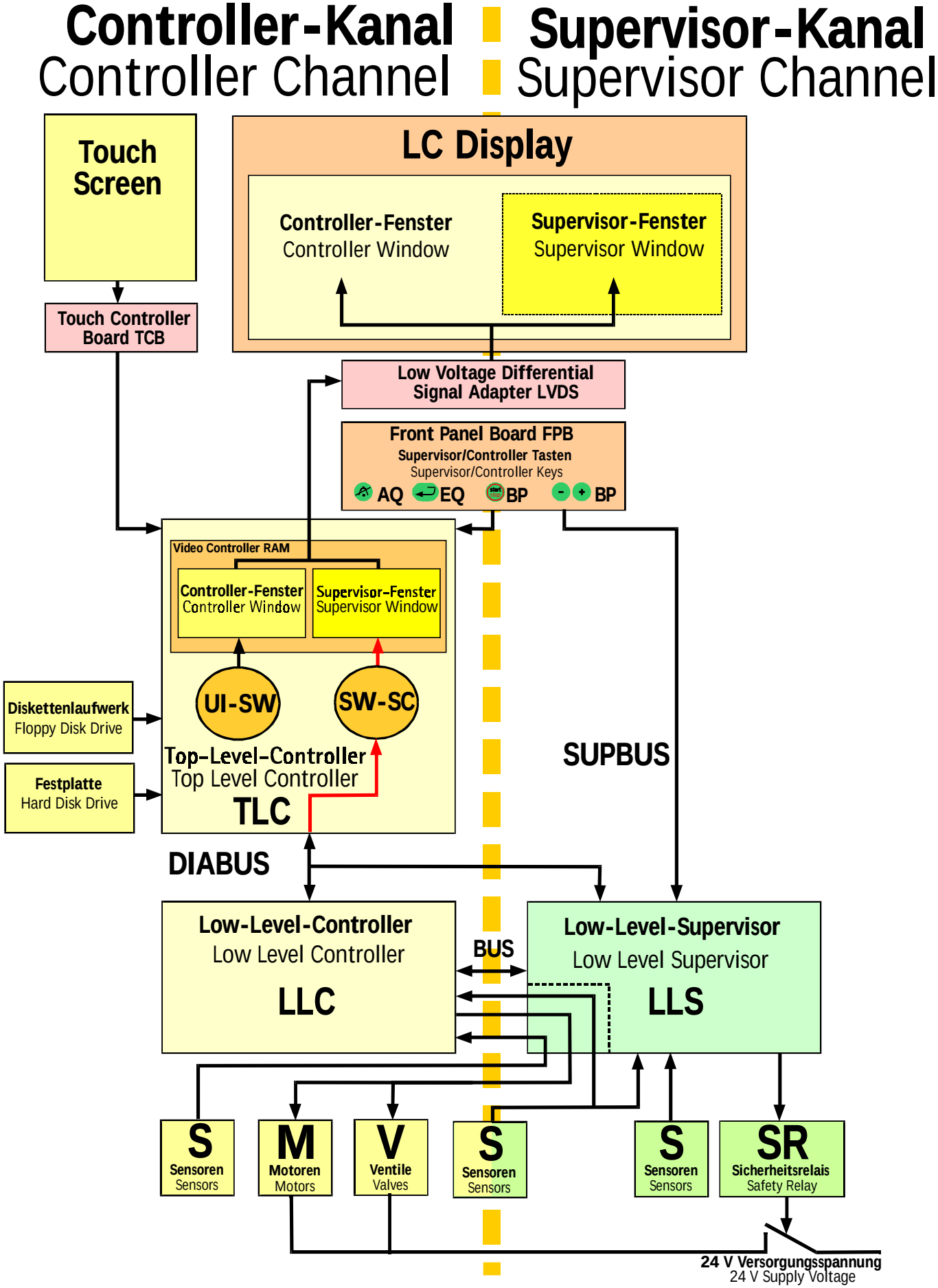

Fig. : Hardware Safety Concept

2.42.2 Description Safety Concept

The complete control and monitoring of the system is performed by the controller. The supervisor is an independent protection system and controls the safety relevant process parameters.

The double channel design of the hard- and software guarantees the monitoring of the safety relevant input and output values. The input of the set-point value, the fault free transmission and monitoring of the output values are thereby guaranteed.

The safety concept has the following processor systems:

- Top level controller on the top level controller board **TLC**
- Low level controller on the low level controller board **LLC**
- Supervisor on the supervisor board **LLS**

Top Level Controller

The top level controller TLC consists of:

- PC hardware
- Operating system (QNX, multi-tasking real time operating system)

The top level controller TLC has the following functions:

- Communication with the user
- Processing of the process parameters for the LLC
- Control of the ABPM
- Balance of ultrafiltration/substitution

The input of the set-point values is performed by:

- Touch screen (colour TFT)
- Floppy disk drive
- LAN (local area network)

Low Level Controller

The low level controller LLC has:

- 68020 microprocessor system

The low level controller LLC has the following functions:

- Control of motors and valves
- Monitoring

Software Supervisor Communication Module SW-SC

The software supervisor communication module (SW-SC module) is a safety independent software module within the TLC. The SW-SC module logically belongs to the supervisor. It has the following functions:

- Display of safety relevant data from the supervisor on the TFT

Front Panel Board FPB

The front panel board FPB has the following functions:

- Interaction with the user via front panel keys and LEDs
- Drive of loudspeaker

Supervisor

The supervisor consist of:

- 80535 microprocessor system

The supervisor has the following functions:

- Signal processing of the sensors
- Monitoring of the safety relevant process pararmeters

Enter of Set-point Values

The acquisition of the set-point values (therapy parameters) is performed as follows:

- Set-point values can be entered by the TLC for preparation of a therapy. The data is transmitted to the LLC and supervisor via the DIABUS.

- The data is used by the LLC to control the motors and valves. The alarm limit values are simultaneously generated for the monitoring of the process parameters.
- Alarm limit values are generated from the set-point values by the supervisor. These are transmitted to the SW-SC module via the DIABUS.
- The following set-point values are displayed on the screen before a therapy can be activated:

  Controller Window:

  – Safety relevant variable set-point values of the controller

  – The controller window data is prepared in the video RAM of the TLC by the user interface software UI-SW module (UI-SW module) of the TLC.

  Supervisor Window:

  – Set-point values of supervisor

  – The supervisor window data is mixed with the controller window data in the video RAM of the TLC by the SW-SC module.
- The user is requested to check these data for plausibility. The double channel ↵ key (enter acknowledgement) can be pressed. The therapy set-point values of the supervisor for monitoring are enabled by the acknowledgement of the ↵ key.
- Safety relevant set-point values can only be changed during a therapy after the user has compared and then acknowledged these values (↵ key). Only then the data is enabled and used by the controller and supervisor.