Model V-850 (MC and SC)

Atom Infant Incubator

Service Manual

Printed in Aug. 1991

-V17B6-

ATOM MEDICAL CORPORATION

3-18-15, Hongo, Bunkyo-ku, Tokyo, Japan.

Introduction

The ATOM Model V-850 INFANT INCUBATOR controls via microprocessor the incubator air temeprature to provide an optimum, hitherto unavailable physiological environment for an infant in the incubator. It is equipped with various alarms designed for patient safety. Please make certain that the incubator has been operated properly before coming to the conclusion that the incubator is out of order. In many cases, lack of knowledge of the operating procedures is the cause of mistaking an activated alarm for a malfunction.

Table of Contents

1. Specifications of V-850 Infant Incubator 4
2. Composition of V-850 Infant Incubator 7
3. Block Diagram 9
4. Wiring Diagram 11
5. 8302A (CPU Board) Circuit Diagram 13

   8302B (Switch Board) Circuit Diagram

   8302G (Heater Board) Circuit Diagram

   8302D (Skin Temperature Probe Board) Circuit Diagram

   8302E (Sensor Block Board) Circuit Diagram
6. Description of Circuitry and Function Test I 19

   6-1 Reference voltage circuit

   6-2 Over-temeprature detection circuit

   6-3 A/D converter circuit

   6-4 Key input circuit

   6-5 Display unit

   6-6 Power failure detection/battery charge circuit

   6-7 Heater output/heater current detection circuit

   6-8 CPU runaway detection circuit

   6-9 Data backup with EEPROM

   6-10 DC+5V, ±12V regulator
7. Function Test 2 (Internal Test with Display) 25

   7-1 Display test

   7-2 Sensor test

8. Function Test 3 (Special Internal Test with Keyboard)..27
8-1 Test Mode 1 (AD/Internal circulation/Others)
8-2 Test mode 2 (Over-temperature)
9. Function Test 4 (Test with Simulator) 34
9-1 Sensor open test
9-2 Sensor short test
9-3 36.0°C test
9-4 Simulation test
10. Initialization of Internal Air Circulation.....36
10-1 Initialization
11. Over-temperature Adjustment.....39
12. List of Alarms.....41
13, Troubleshooting.....45
13-1 When power switch is turned on
13-2 Immediately after self-diagnosis test
13-3 Over-temperature alarm
13-4 Internal air circulation alarm
13-5 Incubator sensor alarm
13-6 Others
14. Reporting of Trouble 53
15. P.C. Boards (8302A) 54
16. Board Components List 55

1. Specifications of V-850 Infant Incubator

Electrical requirements: Customer-specified

Skin temeprature/incubator temeprature control mode: SC/MC system

Skin temperature setting: 34.0-38.0°C in 0.1°C steps

Skin temeprature indication: 30.0-42.0°C in 0.1°C steps

Incubator temperature setting: 25.0-38.0°C in 0.1°C steps

Incubator temperature indication: 20.0-42.0°C in 0.1°C steps

Wall temperature/humidity indication: Switch-selected

Wall temperature: 20.0-42.0°C in 0.1°C steps

Humidity: 20-99% in 1% steps

Heater output: 0-Full, indicated in ten degrees

$>$37°C indication: Should the incubator temperature exceed 37°C, "$>$37°C" indicator will light up and an audible alarm will sound.

Alarms:

Over-temeprature alarm

Should the displayed value of the incubator air temperature exceed 39.0°C or should the temperature of the over-temperature sensor exceed 39.5±0.5°C, the over-temeprature indicator lamp will flash, an audible alarm will sound, and the heater power will be disconnected.

Internal air circulation alarm

Should any trouble develop within the air circulation system, the appropriate indicator lamp will falsh, an audible alarm will sound, and the heater power will be disconnected.

High/low temeprature alarm

(MC mode of operation) Should the incubator air temeprature exceed the pre-selected temperature by more than 1.5°C or drop below the set temeprature by more than 3°C, the selected temperature indicator lamp will flash and an audible alarm will sound.

(SC mode of operation) Should the infant's skin temperature deviate from the pre-selected temeprature by more than ±1°C, the selected temperature indicator lamp will flash and an audible alarm will sound.

Internal sensor alarm

Should any trouble develop on any of the sensors for incubator air temperature, wall temperature, humidity, over-temperature and internal air circulation, the internal sensor indicator lamp will flash and an audible alarm will sound.

Skin temeprature probe alarm

Should any trouble develop on the skin temperature probe, the skin temperature probe indicator lamp will flash, an audible alarm will sound and the heater power will be disconnected.

Power failure alarm

Should power supply be interrupted due to power failure or other causes, the power failure indicator lamp will be illuminated and an audible alarm will sound.

2. Composition of V-850 Infant Incubator (temperature control)

V-850 Infant Incubator is composed of six sensors to monitor several temepratures, humidity and air flow respectively, a heater to warm up the incubator air, a fan for internal air circulation and six P.C. boards for controlling and displaying such features or parameters.

2.1 Functions of sensors

Incubator air temperature sensor

Detects the air temperature in the incubator.

Relative humidity sensor

Detects the temperature affected by evaporation heat. The sensor is covered with a wet nonwoven fabric.

Wall temeprature sensor

Detects the wall temeprature affected by radiation.

Over-temperature sensor

Detects an excessive rise in the incubator air temperature using an independent circuit.

Air flow sensor

Detects changes in the internal air circulation.

Skin tmeperature sensor

Detects the infant's skin temperature. The sensor is attached to the infant's skin.

2.2 Primary functions of boards

8302A	The main board equipped with CPU, in charge of all controls.
8302B	The switch board equipped both with switches for operation and with power failure alarm LED.
8302G	Equipped with a heater power control relay and a current-detecting coil.
8302D	Equipped with EEPROM in which data from a skin temperature thermistor are stored.
8302E	Equipped both with thermistors for incubator air temeprature, RH and wall temperature and with EEPROM in which sensor calibration values are stored.

2.3 Others

Power source	+5V (3A), +12V (1.2A), -12V (0.3A)
Heater	260VA
Fan motor	Makes the air circulate in V-850 Infant Incubator
LCD unit	Displays various control data and conditions of V-850 Infant Incubator

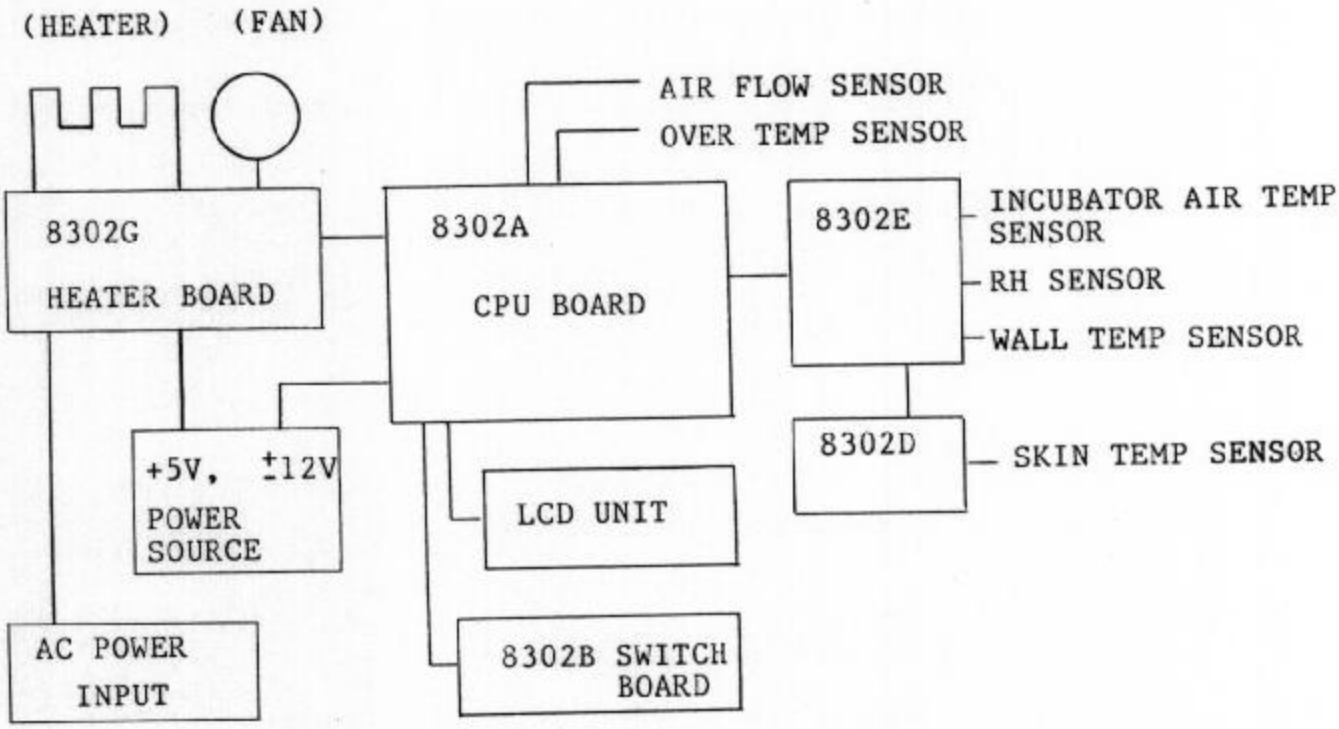
(HEATER)
(FAN)
AIR FLOW SENSOR
OVER TEMP SENSOR
8302G
HEATER BOARD
8302A
CPU BOARD
8302E
INCUBATOR AIR TEMP SENSOR
RH SENSOR
WALL TEMP SENSOR
8302D
SKIN TEMP SENSOR
+5V, ±12V
POWER SOURCE
LCD UNIT
AC POWER INPUT
8302B SWITCH BOARD

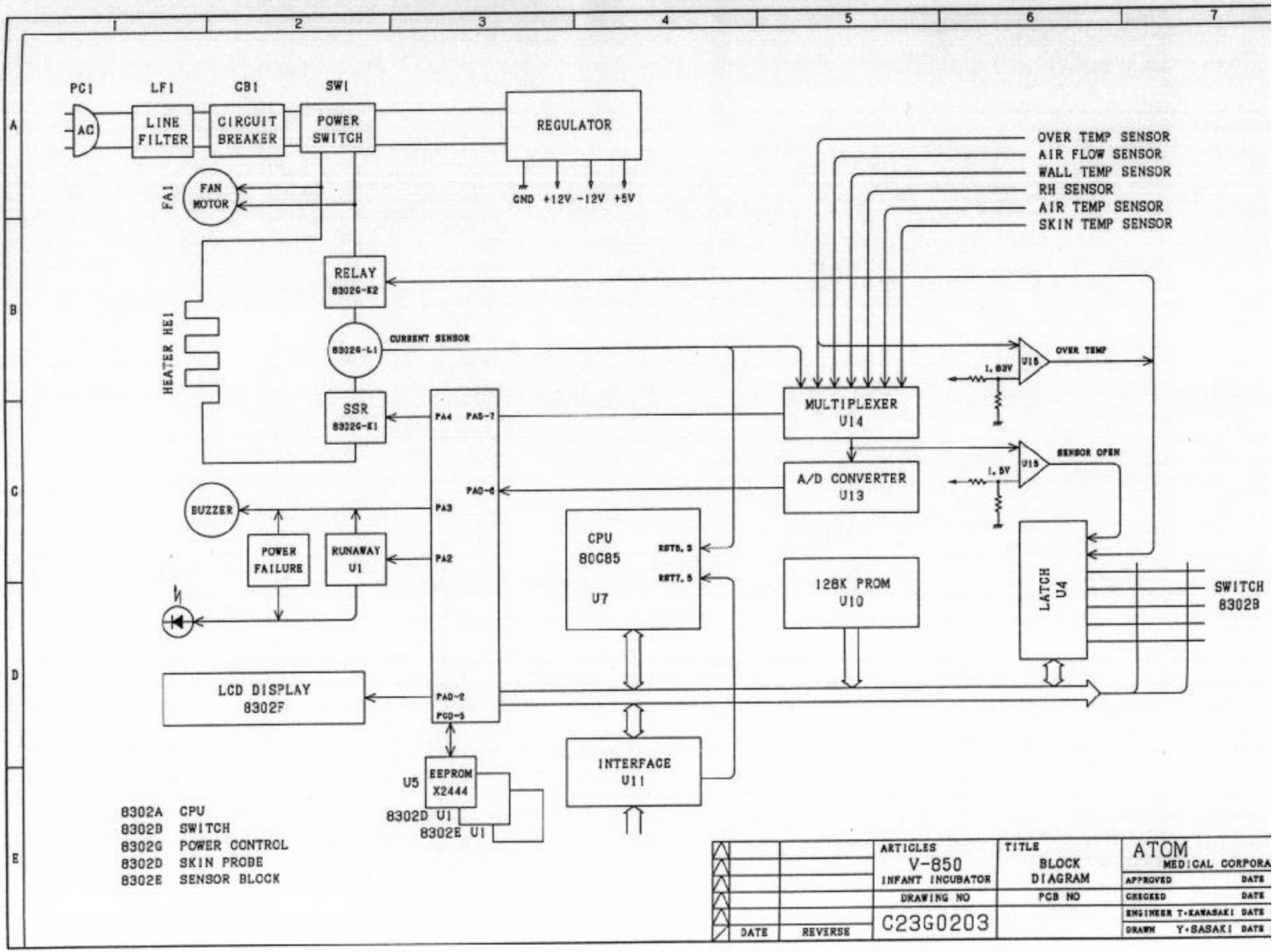
PC1
LF1
CB1
SW1
AC
LINE FILTER
CIRCUIT BREAKER
POWER SWITCH
REGULATOR
GND +12V -12V +5V
FA1
FAN MOTOR
HEATER HE1
RELAY 8302G-K2
8302G-L1
CURRENT SENSOR
SSR 8302G-E1
BUZZER
POWER FAILURE
RUNAWAY U1
LCD DISPLAY 8302F
PA4
PA5-7
PA0-6
PA3
PA2
PA0-2
PC0-5
CPU 80C85 U7
RST6.5
RST7.5
EEPROM X2444
U5
8302D U1
8302E U1
INTERFACE U11
OVER TEMP SENSOR
AIR FLOW SENSOR
WALL TEMP SENSOR
RH SENSOR
AIR TEMP SENSOR
SKIN TEMP SENSOR
MULTIPLEXER U14
A/D CONVERTER U13
1.63V
U15
OVER TEMP
1.5V
SENSOR OPEN
128K PROM U10
LATCH U4
SWITCH 8302B
8302A CPU
8302B SWITCH
8302G POWER CONTROL
8302D SKIN PROBE
8302E SENSOR BLOCK
ARTICLES
V-850
INFANT INCUBATOR
TITLE
BLOCK DIAGRAM
ATOM
MEDICAL CORPORA
DRAWING NO
C23G0203
PCB NO
APPROVED
CHECKED
ENGINEER T.KANASAKI
DRAWN Y.SASAKI
DATE
REVERSE

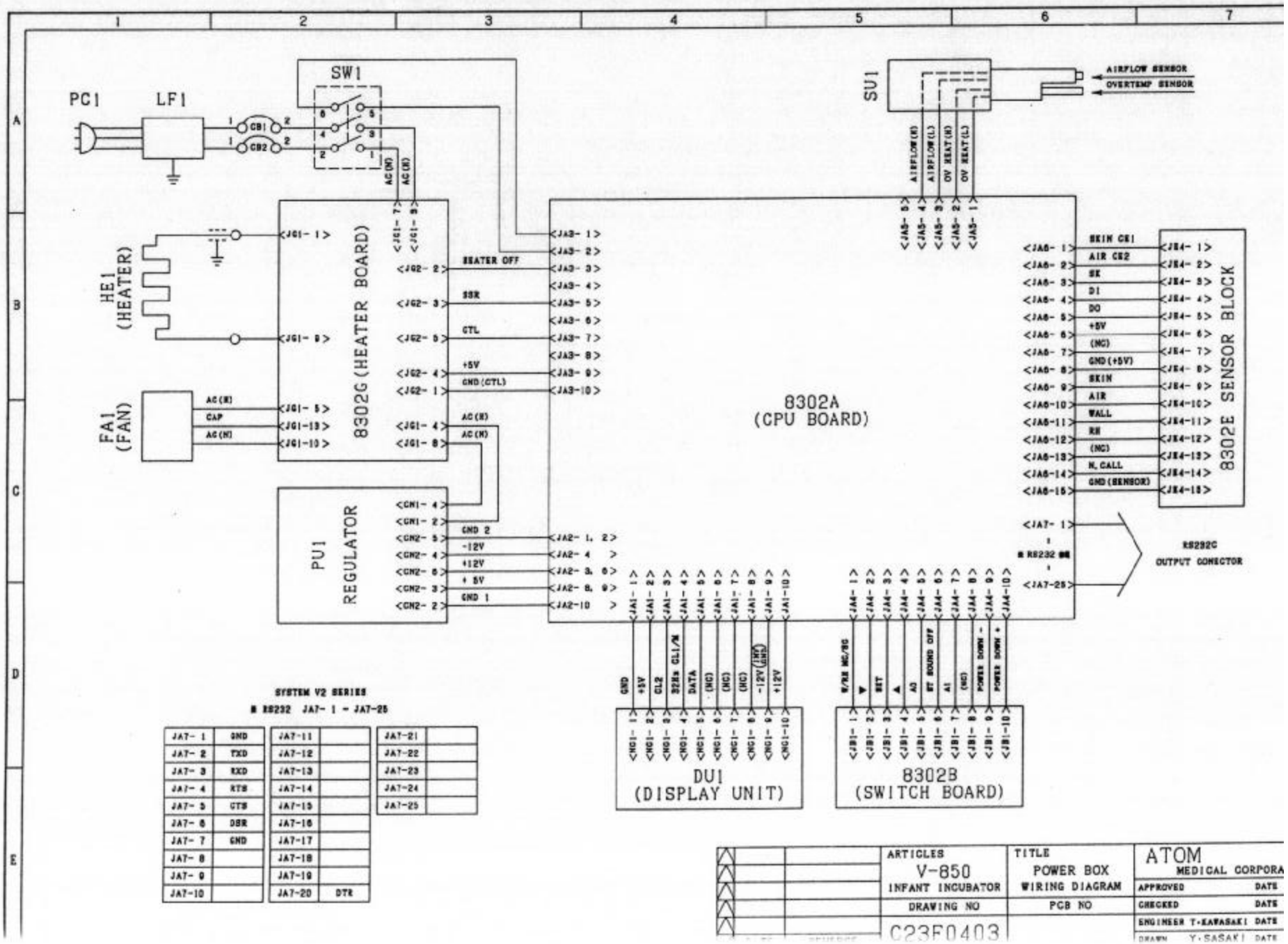

SYSTEM V2 SERIES

■ RS232 JA7- 1 - JA7-25

JA7- 1	GND	JA7-11		JA7-21	
JA7- 2	TXD	JA7-12		JA7-22	
JA7- 3	RXD	JA7-13		JA7-23	
JA7- 4	RTS	JA7-14		JA7-24	
JA7- 5	CTS	JA7-15		JA7-25	
JA7- 6	DSR	JA7-16			
JA7- 7	GND	JA7-17			
JA7- 8		JA7-18			
JA7- 9		JA7-19			
JA7-10		JA7-20	DTR		

ARTICLES	TITLE	ATOM MEDICAL CORPORA	
V-850 INFANT INCUBATOR	POWER BOX WIRING DIAGRAM	APPROVED	DATE
DRAWING NO	PCB NO	CHECKED	DATE
C23E0403		ENGINEER T.KAWASAKI	DATE
		DRAWN Y.SASAKI	DATE

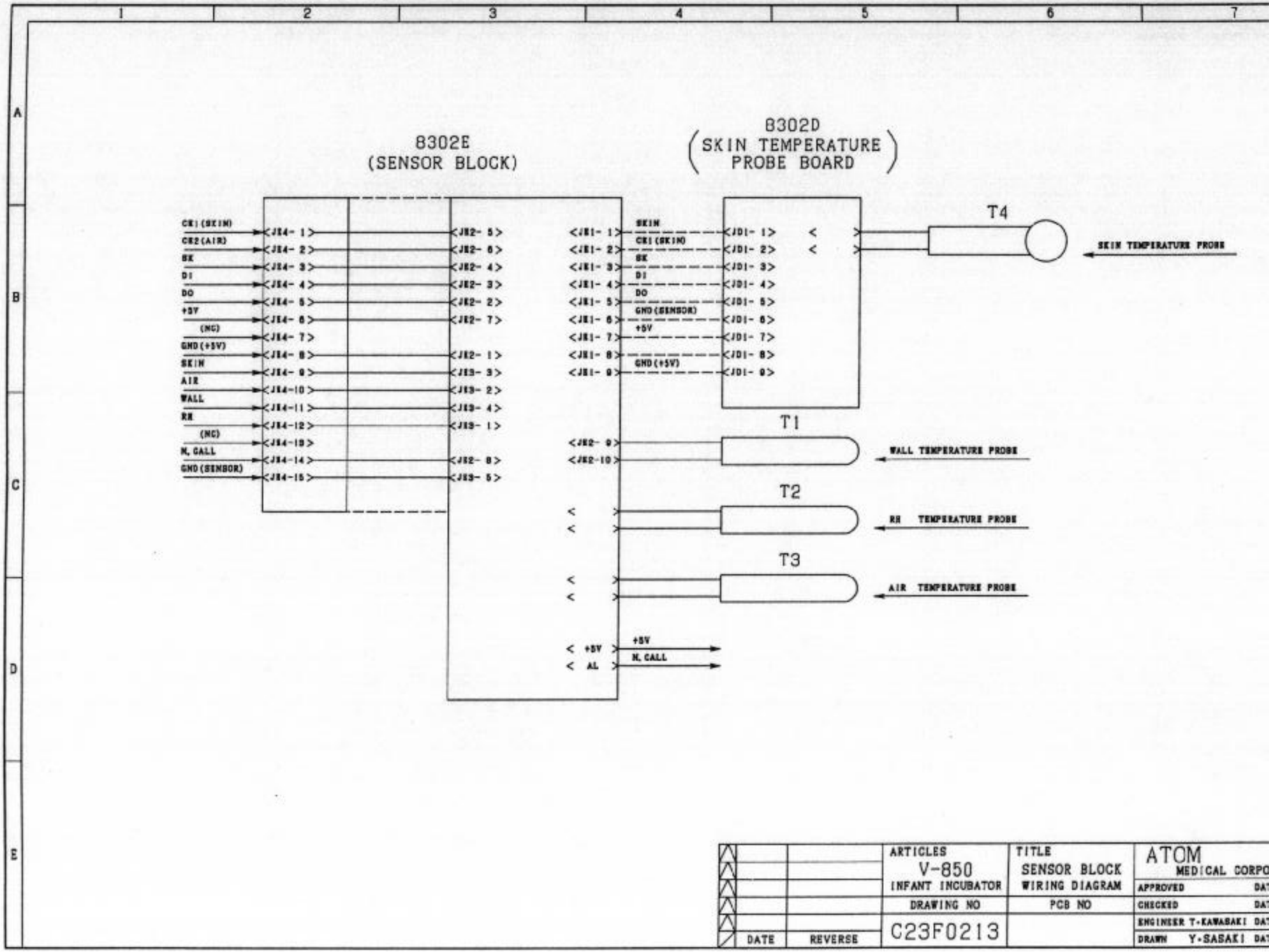

			ARTICLES	TITLE	ATOM MEDICAL CORPO
			V-850 INFANT INCUBATOR	SENSOR BLOCK WIRING DIAGRAM	APPROVED DAT
			DRAWING NO	PCB NO	CHECKED DAT
	DATE	REVERSE	C23F0213		ENGINEER T-KAWASAKI DAT
					DRAWN Y-SASAKI DAT

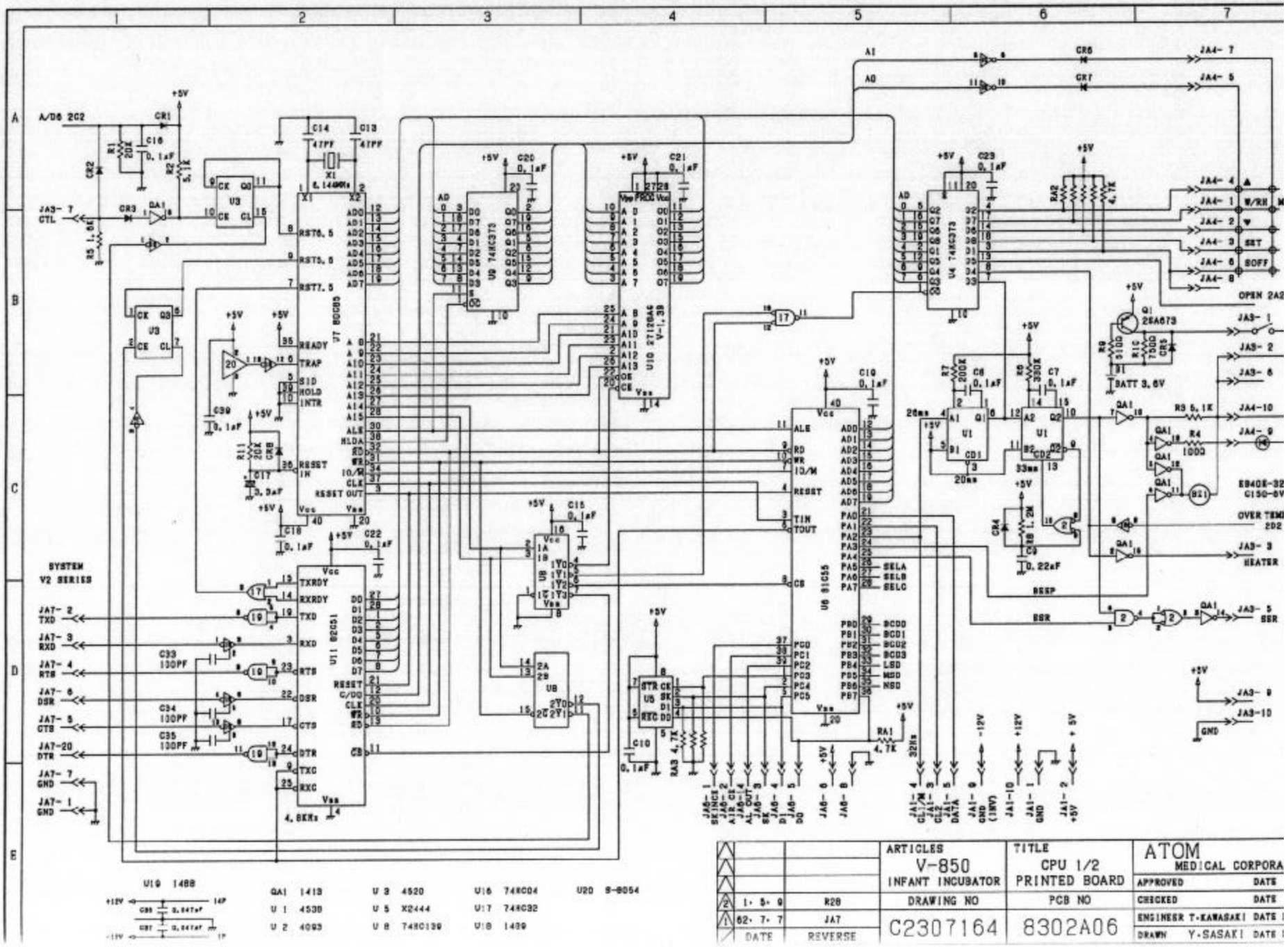

A/D6 2C2
SYSTEM V2 SERIES
U7 80C85
U11 82C51
U9 74HC373
U10 27128A6 V-1.3B
U4 74HC373
U6 81C55
U1 2SA673
U19 1488
QA1 1413
U 1 4538
U 2 4093
U 3 4520
U 5 X2444
U 8 74HC139
U16 74HC04
U17 74HC32
U18 1489
U20 S-8054
ARTICLES
V-850
INFANT INCUBATOR
TITLE
CPU 1/2
PRINTED BOARD
ATOM
MEDICAL CORPORA
APPROVED
DATE
CHECKED
DATE
ENGINEER T-KAWASAKI
DATE
DRAWN Y-SASAKI
DATE
DRAWING NO
C2307164
PCB NO
8302A06
DATE
REVERSE

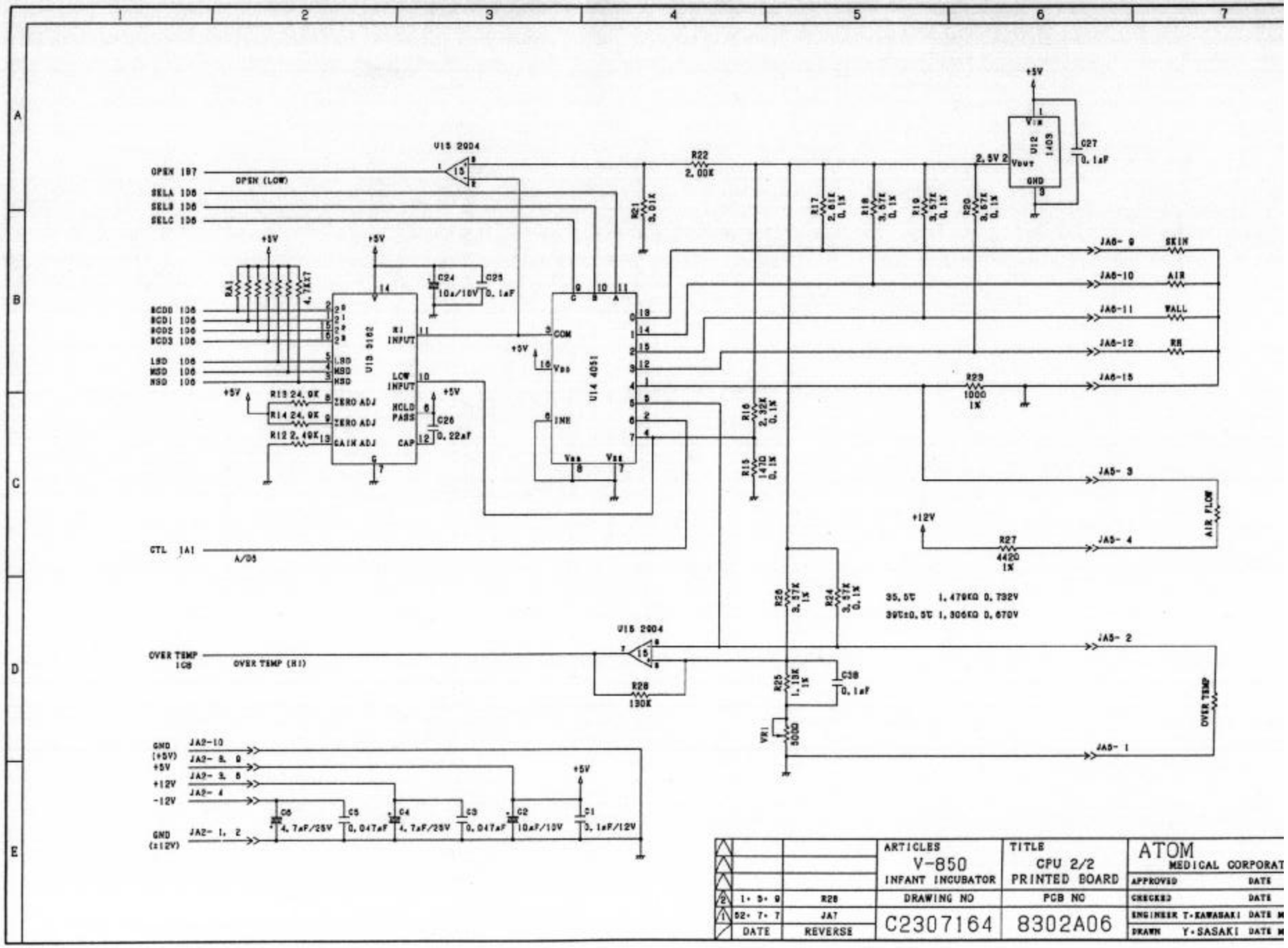
1
2
3
4
5
6
7
A
B
C
D
E
OPEN 1B7
OPEN (LOW)
SELA 1D6
SELB 1D6
SELC 1D6
BCD0 1D6
BCD1 1D6
BCD2 1D6
BCD3 1D6
LSD 1D6
MSD 1D6
NSD 1D6
CTL 1A1
A/D5
OVER TEMP 1C6
OVER TEMP (H1)
GND (+5V)
+5V
+12V
-12V
GND (±12V)
JA2-10
JA2- 8, 9
JA2- 3, 5
JA2- 4
JA2- 1, 2
U15 2904
U13 3162
U14 4051
U12 1403
R22 2.00K
R21 3.01K
R17 2.61K 0.1%
R18 3.57K 0.1%
R19 3.57K 0.1%
R20 3.57K 0.1%
R16 2.32K 0.1%
R15 1470 0.1%
R23 1000 1%
R27 4420 1%
R26 3.57K 1%
R24 3.57K 0.1%
R25 1.13K 1%
R28 130K
VR1 500Ω
RA1 4.7KX7
R13 24.9K
R14 24.9K
R12 2.49K
C24 10μ/10V
C25 0.1μF
C26 0.22μF
C27 0.1μF
C38 0.1μF
C6 4.7μF/25V
C5 0.047μF
C4 4.7μF/25V
C3 0.047μF
C2 10μF/10V
C1 0.1μF/12V
JA6- 9 SKIN
JA6-10 AIR
JA6-11 WALL
JA6-12 RH
JA6-15
JA5- 3 AIR FLOW
JA5- 4
JA5- 2 OVER TEMP
JA5- 1
35.5℃ 1.479KΩ 0.732V
39℃±0.5℃ 1.306KΩ 0.670V
ARTICLES V-850 INFANT INCUBATOR
TITLE CPU 2/2 PRINTED BOARD
ATOM MEDICAL CORPORAT
DRAWING NO C2307164
PCB NO 8302A06
APPROVED DATE
CHECKED DATE
ENGINEER T-KAWASAKI DATE
DRAWN Y-SASAKI DATE
1・3・9 R28
52・7・7 JA7
DATE REVERSE

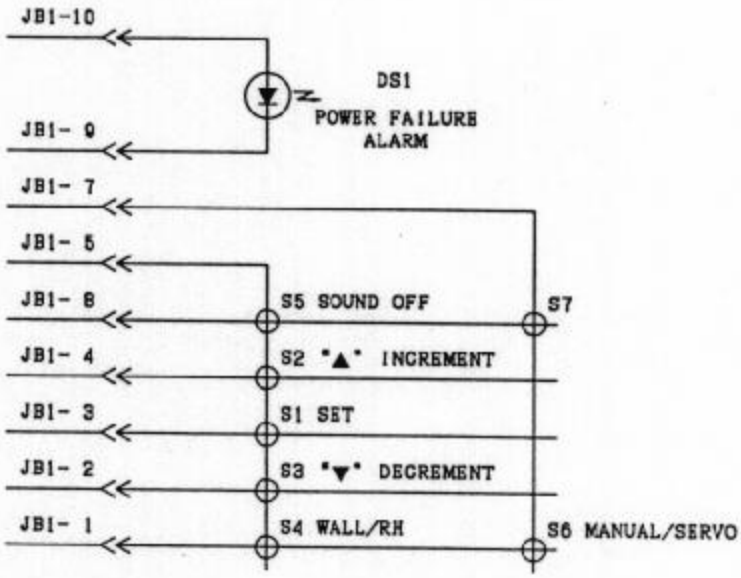

MC unit is not
equipped with S6

		ARTICLES V-850 INFANT INCUBATOR	TITLE SWITCH PRINTED BOARD	ATOM MEDICAL CORPORATIC
		DRAWING NO	PCB NO	APPROVED DATE
DATE	REVERSE	C2307234	8302B03	CHECKED DATE ENGINEER T·KAWASAKI DATE MAR DRAWN Y·SASAKI DATE MAY

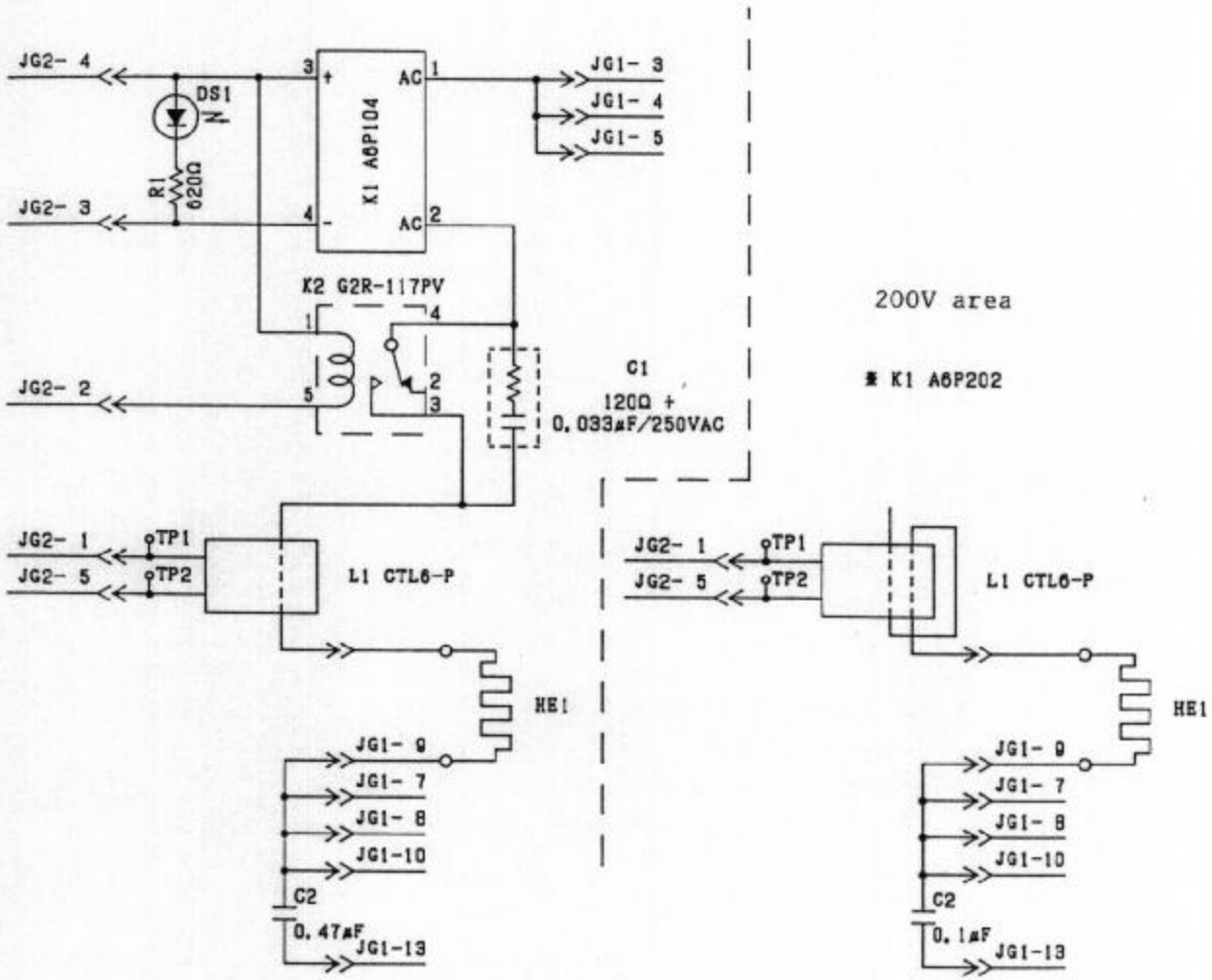

		ARTICLES V-850 INFANT INCUBATOR	TITLE HEATER PRINTED BOARD	ATOM MEDICAL CORPORATION
		DRAWING NO	PCB NO	APPROVED DATE
		C2307404	8302G00	CHECKED DATE
				ENGINEER T·KAWASAKI DATE SEP'87
DATE	REVERSE			DRAWN Y·SASAKI DATE SEP'87

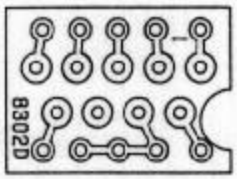

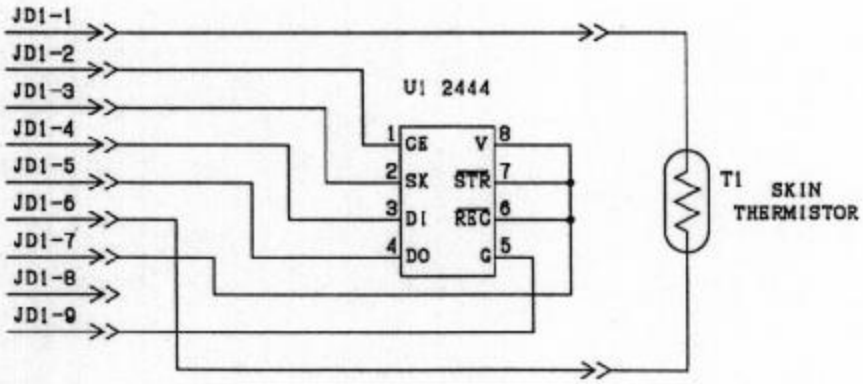

		ARTICLES V-850 INFANT INCUBATOR	TITLE SKIN PROBE PRINTED BOARD	ATOM MEDICAL CORPORATION
		DRAWING NO	PCB NO	APPROVED DATE
				CHECKED DATE
				ENGINEER T·KAWASAKI DATE MAR'87
DATE	REVERSE	C2308204	8302D00	DRAWN Y·SASAKI DATE MAY'87

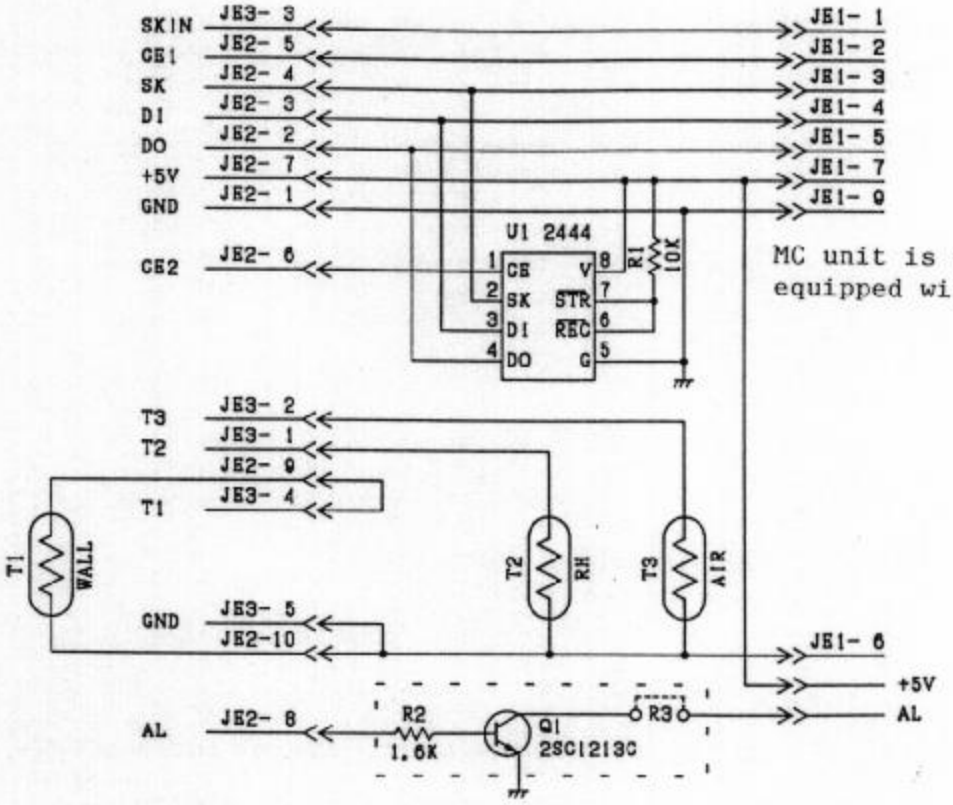

R2, R3 and Q1 will be provided when AL is operated

		ARTICLES V-850 INFANT INCUBATOR	TITLE SENSOR BLOCK PRINTED BOARD	ATOM MEDICAL CORPORATION
		DRAWING NO	PCB NO	APPROVED DATE
		C2307624	8302E02	CHECKED DATE
				ENGINEER T.KAWASAKI DATE MAR'87
DATE	REVERSE			DRAWN Y.SASAKI DATE MAY'87

6. Description of Circuitry

6-1 Reference voltage input

As the unit must measure temperature very accurately, 2.5V±25mV is supplied by an IC (U12, pin2) designed to generate highly precise reference voltage.
Output, in proportion to changes in temeprature detected by each sensor, is generated at CH0-4.

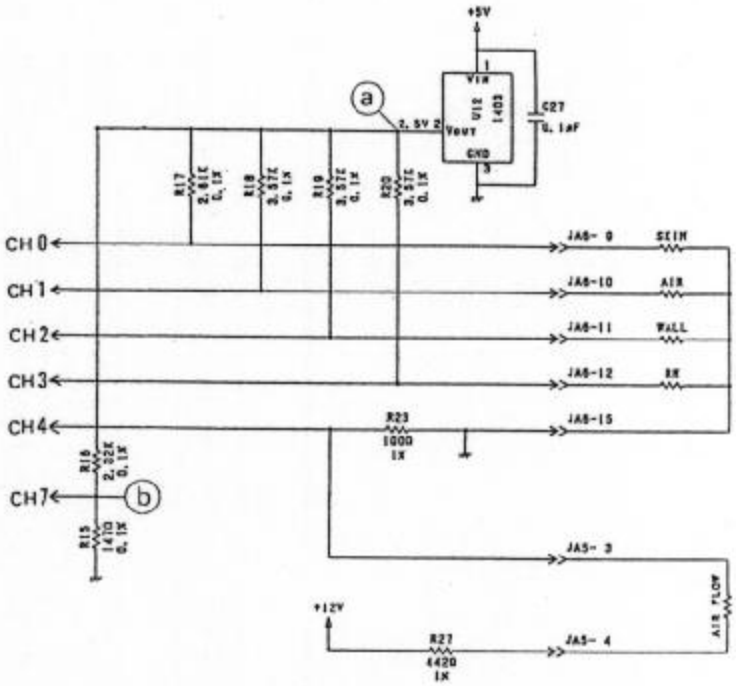

(Test Point) * a ... 2.5V ± 25mV

* b ... 0.15V ± 5mV
* If virtual resistance (1K～2kΩ) is inserted in the sensor section, specified voltage divided by R17～20 or R23 and R27 is fed to CHO - 4.

6-2 Over-temperature detection circuit

An over-temperature condition is detected by the following two methods:

1. When the sensor detects the incubator air temperature at or over 39.0°C, the incubator air temperature sensor judges that an over-temperature condition exists and activates the over-temperature alarm.

2. The over-temperature detection sensor, which is independent of the CPU-controlled temperature measurement circuit, activates the over-temperature alarm when the sensor detects an alarm condition at 39.5 +/- 0.5°C.
In this case, both the audible and visual alarms will be automatically reset when the air temperature is felt by the sensor to have fallen by 2-3°C from the alarm temperature level.

The temperature information obtained by the over-temperature sensor is sent as voltage information to CPU via CH5.

When the over-temperature detection sensor becomes activated, the relay (K2) on the 8302C board will go OFF and the heater output will be interrupted.

Ref.) The over-temperature detection level is adjusted with VR1. Refer to 11. Over-Temperature Adjustment for procedures.

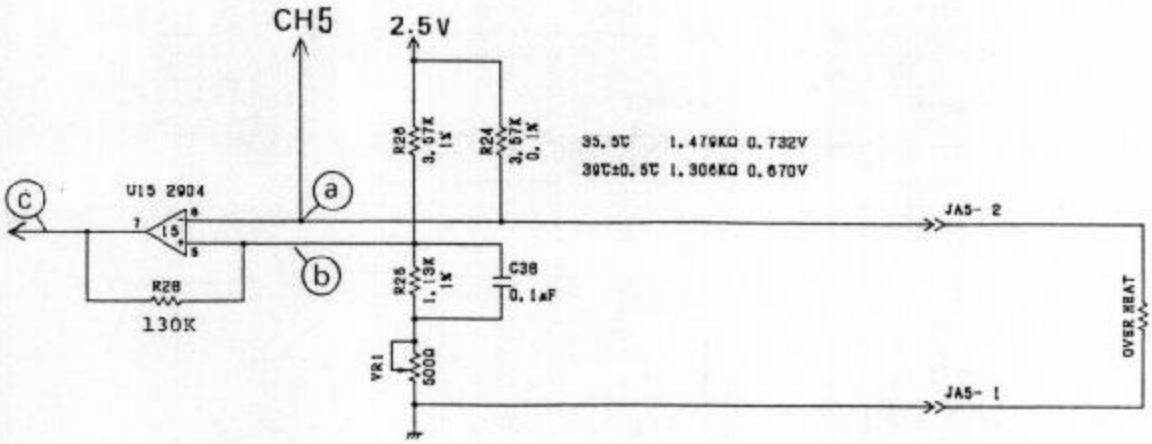

(Test Point) * a ... If virtual resistance (1k～2kΩ) is inserted in the sensor section, specified voltage divided by R25, R26 and VR1 is fed to CH5.

* b ... 0.6 - 0.78V

* c ... Goes high (+5V) in over-temperature conditions (Point a < Point b).

6-3 A/D converter circuit

Temperature data inputted by each temperature sensor are switched over by 8CH multiplexer (U14) and digitally inputted to CPU via 10 bit A/D converter (U13).

The analogue voltage inputted by a sensor will vary within the range of 0.15 - 1.15V in normal conditions. Should the sensor be disconnected, 2.5V will be inputted, or should it be shorted, 0V will be inputted. (In the case of CH4, 0V for disconnection and 2.5V for short.) U15 will output 0V in case of sensor disconnection, while CPU will recognize a shorted sensor and give an alarm.

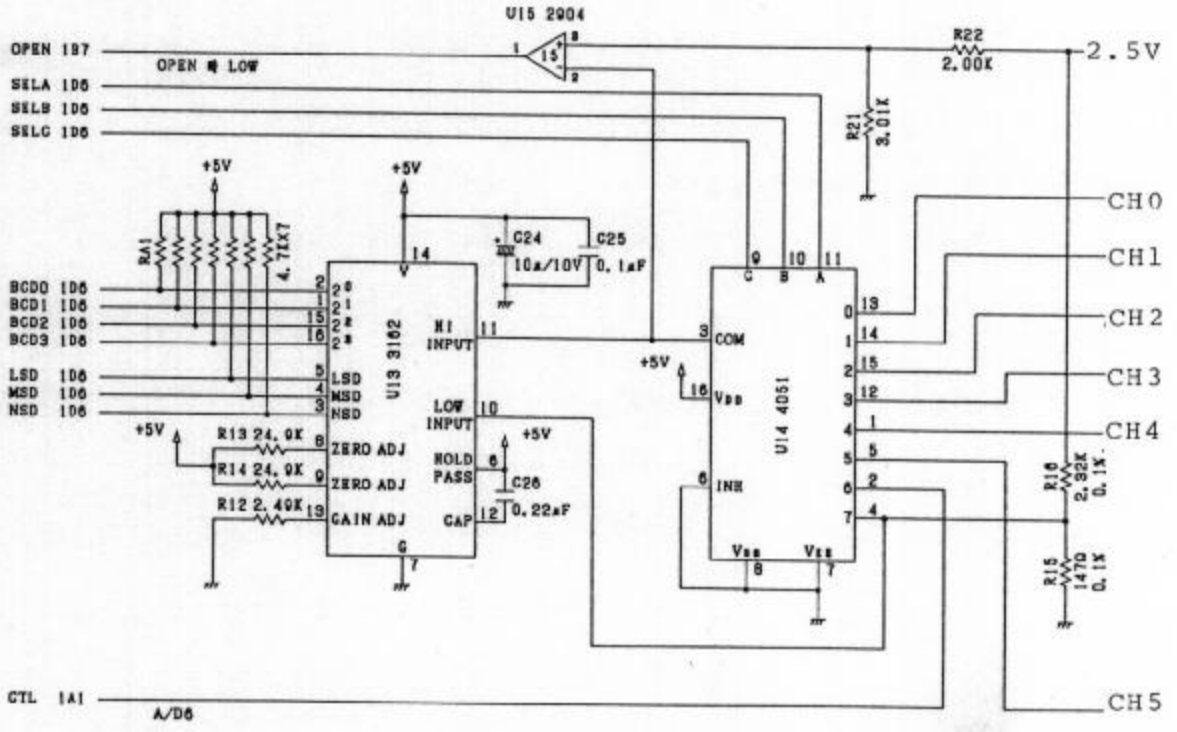

6-4 Key input circuit

When a key switch incorporated in 8302B board is pressed, 8 bit latch (U4) will input the key information to CPU via AD 0 - 7.

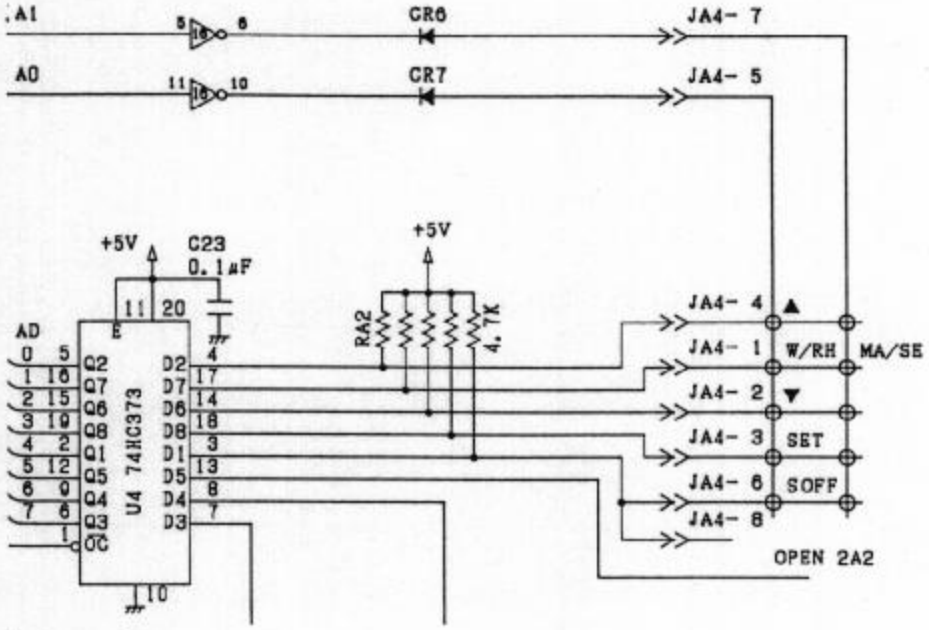

6-5 Display unit

Temperature information, control status and other data processed by CPU are displayed on LCD on the front panel.

6-6 Power failure detection / battery charge circuit

The unit has an internal Ni-Cd battery for an audible alarm and LED display during power failure. A power fialure alarm will be given if AC power is not

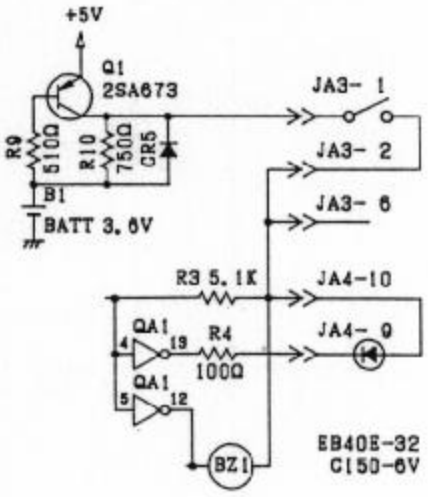

supplied even though the power switch is depressed.

6-7 Heater output / heater current detection circuit

CPU outputs heater output control signals via U6 (81C55) port to control K1 (SSR) on 8302G board.

The same output is fed back to CPU by the current sensor (L1) to monitor a trouble developed on SSR, the heater, etc.

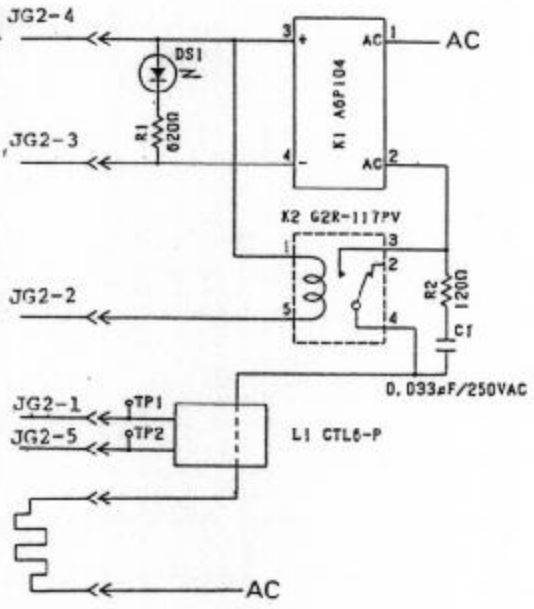

6-8 CPU runaway detection circuit

Should any trouble develop on CPU and the program be in runaway conditions, an alarm will be immediately given, and the heater power will be disconnected.

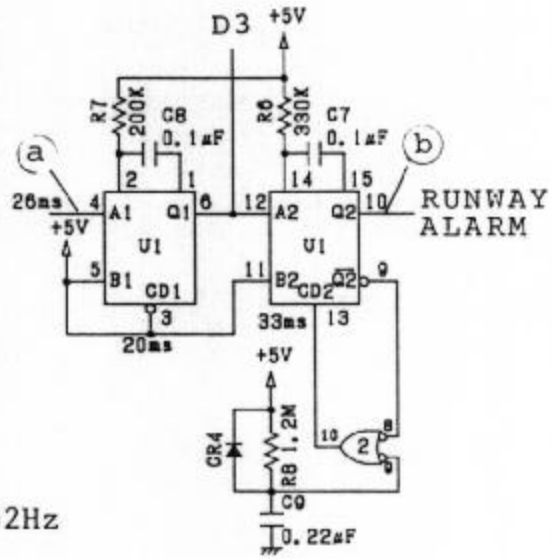

(Test Point)

* a ... During normal operation 32Hz
* b ... During normal operation +5V
  During trouble 0V

6-9 Data backup with EEPROM

When the unit is turned off, function setting backup and correction values for respective sensors will be retained.

Note) As data stored in each EEPROM on 8302A board (CPU board), 8302D board (Sensor unit board) or 8302E board (Skin temeprature probe board) correspond to each instrument or sensor, sensors or EEPROM cannot be replaced.

6-10 DC +5V, ±12V regulator

The unit is provided with DC +5V, ±12V by PU1.
DC +5V is used for most circuitry. Should any trouble develop on this voltage, all operation of the unit will be affected.
DC ±12V is used for LCD display backlight. Should any trouble develop on this voltage, LCD display will be darkened.

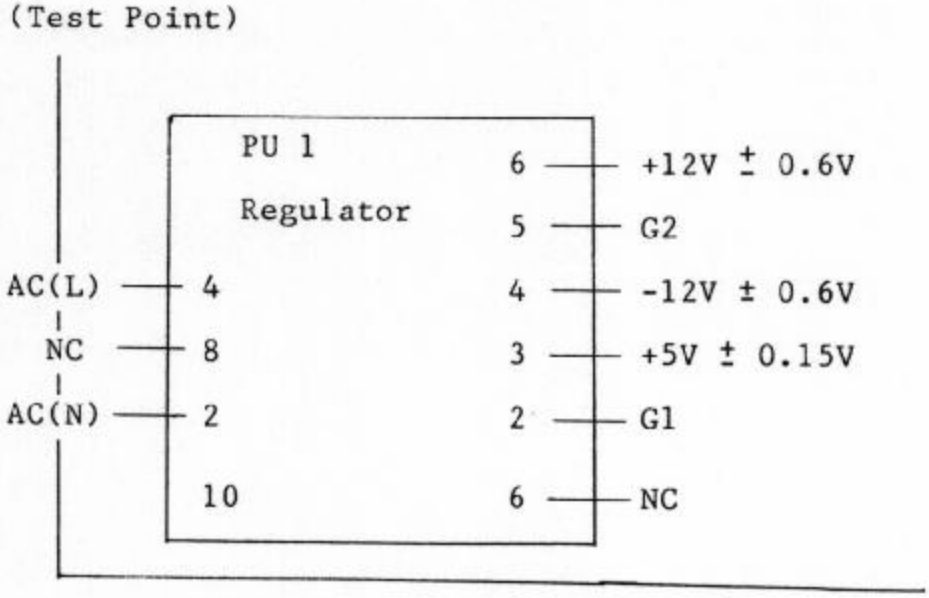

7. Function Test 2 (Internal Test with Display)

7-1 Display test

When the unit is turned on, it goes through a self-diagnostic LCD test on the display.

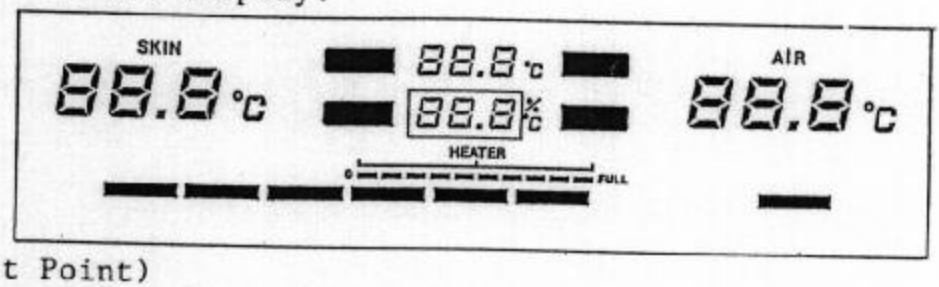

(Test Point)

* Neither backlight nor LCD display is on.

  ·····> Check AC power switch, DC±12V, +5V, and the connector.

  Faulty LCD unit

* Backlight is not illuminated.

  ·····> Check DC ±12V.

  Faulty LCD unit.

* LCD segment is missing.

  ·····> Faulty LCD unit.

* LCD display is not normal, and a power failure alarm is given.

  ·····> CPU runaway. If the situation is not corrected even when the unit is started again, total malfunction is suspected.

7-2 Sensor test

Sensors are checked for malfunction while the unit is in operation.

(Test Point)

* A sensor alarm occurs and LCD displays (temperature) are all blank.

  ····> Defective sensor unit.
  Defective cable.
  Connector off.

* A sensor alarm occurs, and incubator air temperature, RH and wall temeprature displays go LO or HI.

  ····> LO means sensor input line disconnection;
  HI means short circuit.

* A sensor alarm occurs, but temperature displays are normal.

  ····> Either the over-temeprature sensor or the air flow sensor is disconnected or shorted.

* In SC mode, a probe alarm occurs and temeprature displays are all blank.

  ····> Connector is off.
  Defective probe.

* In SC mode, a probe alarm occurs and temperature displays indicate either LO or Hl.

  ····> LO means short;
  Hl means disconnection.

8. Function Test 3 (Special Internal Test via Keyboard)

Special operation of the keyboard permits monitoring and checking the function of A/D converter and the condition of internal air circulation in the V-850 Infant Incubator.

Good care must be taken. An accidental misoperation may destroy the ability of the incubator to function.

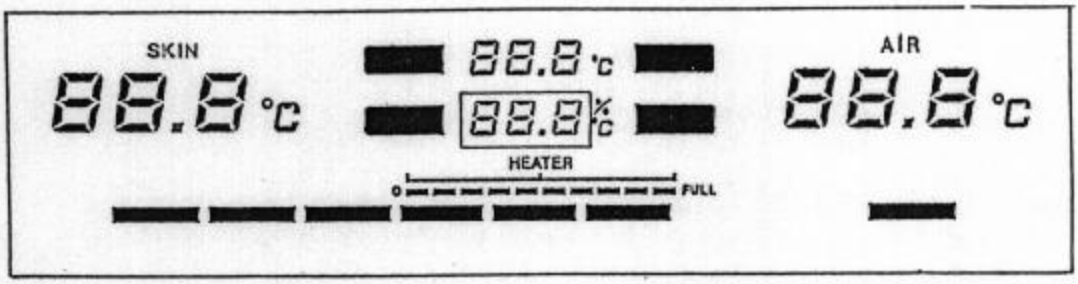

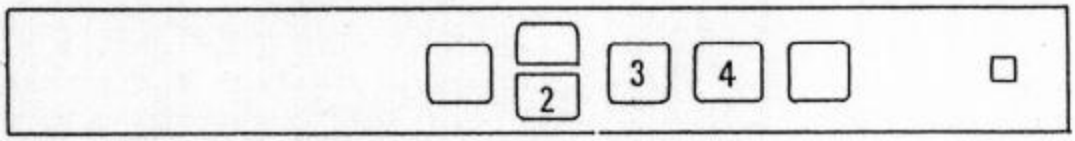

8-1 Test mode 1 (A/D converter, internal air circulation, others)

* Setting

Turn the power switch on while depressing Panel Switch 2 (↓). Hold Switch 2 until the self-diagnosis program is completed. Test Mode 1 is selected when CH.0 is indicated on the RH/wall temeprature display.

* Operation

Once Test Mode 1 is selected, depress Panel Switch 4 (alarm reset switch), and the RH/wall temeprature display will go through a sequence of CH.0→CH.1→CH.2→CH.3→CH.4→CH.5→CH.6

→CH.7→OP→FA→SE→So→H7→V1→V2→Pd→CH.0→ ...

CH.0 —DH7 indicate the contents of A/D converter, OP indicates the operating temperature, Fa indicates the flow of air, SE indicates a defective sensor, So indicates a disconnected sensor, H7 indicates the temperature of the RH sensor, V1 and V2 each indicates a program version, and Pd indicates the date of programming.

Depress Panel Switch 3 (RH/wall temeprature), and appropriate data will appear on the RH/wall temeprature display for CH0-7, OP, FA, SE, So,H7, V1, V2 and Pd.

(Refer to the following description for details of data.)

Note: The V1.3 program does not permit displaying in any of the modes OP Pd.

* To stop the test procedure:

Turn the power switch off and then on.

** ANALYSIS OF DATA IN TEST MODE				
1. Turn the power switch on. Turn Switch 2 (↓) on. LCD Test. ↓				Rh/wall temperature display CH.0
2. Set Test Mode 1.				
SW4	Display 1	SW3	Display 2	
ON↓	CH.0	ON → ←	590	* Status of skin temperature probe 999 ... Probe disconnected -99 ... Probe shorted

ON↓	CH.1	ON → ←	580	* Status of incubator air temeprature sensor 999 ... Probe disconnected -99 ... Probe shorted
ON↓	CH.2	ON → ←	580	* Status of wall temperature sensor 999 ... Probe disconnected -99 ... Probe shorted
ON↓	CH.3	ON → ←	580	* Status of RH sensor 999 ... Probe disconnected -99 ... Probe shorted
ON↓	CH.4	ON → ←	645	* Status of air flow sensor -99 ... Probe disconnected 999 ... Probe shorted
ON↓	CH.5	ON → ←	630	* Status of over-temperature sensor 999 ... Probe disconnected -99 ... Probe shorted
ON↓	CH.6	ON → ←	120	* Status of current sensor -99 ... Heater output is zero.
ON↓	CH.7	ON → ←	0	* A/D converter ground 0±1 : normal others: defective interface
ON↓	OP	ON → ←	32.2	* Operating temperature (SC mode) Ref.) Refer to Section 13 for operating temperature.
ON↓	FA	ON → ←	-40	* Status of internal air circulation -40±10 (stabilized): normal over zero: alarm conditions
		Ref.) Alarm conditions will occur frequently if internal air circulation is not initially set to be normal. Refer to Section 11 for performing initial setting of internal air circulation.		

ON ↓	SE	ON → ←	150	* Indicates a defective sensor. 1 ... defective BIT 7 6 5 4 3 2 1 0 — incubator air temeprature └over-temperature └air flow └RH └wall temeprature └sensor unit off └skin temperature └skin temperature probe off
ON ↓	So	ON → ←	198	* Sensor disconnected 1 ... Disconnected BIT 7 6 5 4 3 2 1 0 — incubator air temperature └over-temeprature └air flow └RH └wall temperature └sensor unit off └skin temperature └skin temperature probe off
ON ↓	H7	ON → ←	365	* Temperature sensed by RH sensor (x10)
ON ↓	U1	ON → ←	013	* Program version 1 017...V17B6 (1989/6)
ON ↓	U2	ON → ←	001	* Program version 2 005...V17B6 (1989/6)
ON ↓	Pd	ON → ←	704	* Date of programming

Note) The V1.3B program does not permit displaying in any of the modes OP～Pd.

Ref.) * The A/D converter values displayed in CH.0-3 are those of the test simulator (36.0°C) ±15. The test simulator should be calibrated correctly.)

* The values displayed in CH4 and CH5 are obtained in stabilized conditions with the incubator air temepra-ture at 34.0 ±2°C.

* A defective or disconnected sensor is indicated deci-mally. Conditions of each sensor are known by converting the decimal system into the binary system.

Ex) SE (defective sensor) Displayed value D = 150 ... binary system (10010110)

Content ... Skin temp probe off; wall temp sensor, air flow sensor, over-temp sensor defective.

Ex) So (disconnected sensor) Displayed value D = 198 ... binary system (11000110)

Content ... Skin temp probe off; skin temp sensor, air flow sensor, over-temp sensor disconnected.

Judging from the displayed values of Se and So, the skin temp sensor must be disconnected due to the skin temp probe off. (In case of MC nothing is wrong as no skin temp sensor is attached.)

A defective wall temeprature sensor must mean that the sensor input line is shorted as the sensor is not disconnected.

A defective air flow sensor and a defective over-temperature sensor both mean that the sensors are disconnected, probably their connectors on the same line are off.

Example of calculation

150 - 2 = 75 ... 0, 75 - 2 = 37...1, 37 - 2 = 18...1, 18 - 2 = 9...0, 9 - 2 = 4...1, 4 - 2 = 2...0, 1 - 2 = 0...1

Put the underlined figures together one after another beginning with the rightmost position, and you'll get 10010110.

8-2 Test Mode 2 (over-temeprature test)

In this test mode, the incubator air temeprature can be set to 39.5°C with MC.

* Setting

Turn the power switch on while depressing Panel Switch 1 (setting). Hold Switch 1 until the self-diagnosis program is completed.

Test Mode 2 (over-temeprature test) is selected when the incubator air temperature setting reads 39.5°C.

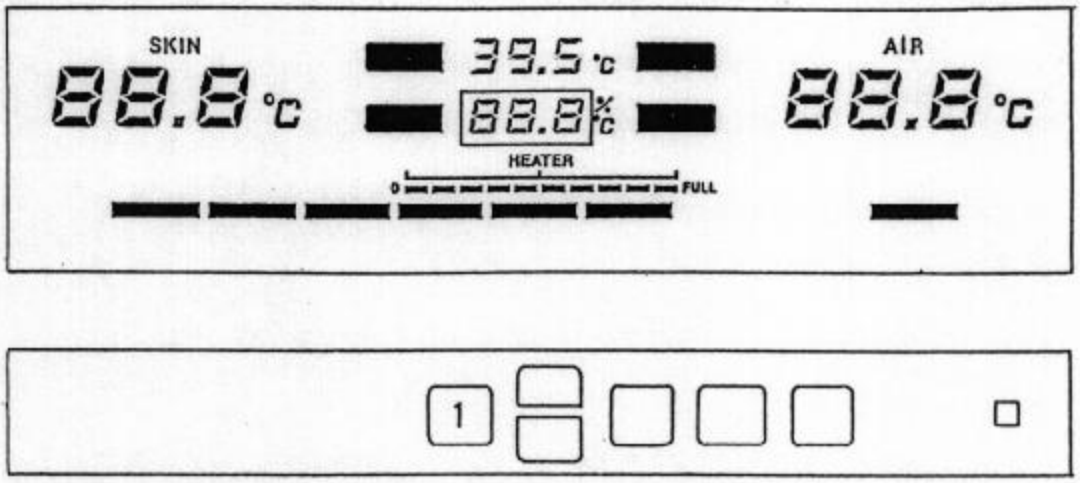

(Test Point)

* Verify that an over-temperature alarm is given when the incubator air temperature reaches 39.5±0.5°C.

Ref.) Refer to Section 11 for adjustment.

9. Function Test 4 (Test with Simulator)

Perform simulation of the control unit with V-850 test simulator.

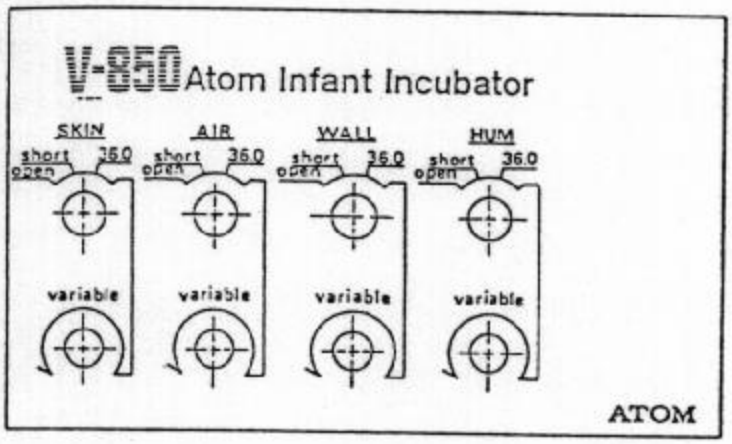

9-1 Sensor open test

Set the rotary switch of each sensor to "open" to simulate the situation where the sensor is disconnected.

(Test Point) * The heater stops.

* The value indicated by each sensor (LO) flashes.

* AD converter indicates 999 in Test Mode 1.

9-2 Sensor short test

Set the rotary switch of each sensor to "short" to simulate the situation where the sensor is shorted.

(Test Point) * The heater stops.

* The value indicated by each sensor (Hl) flashes.

* AD converter indicates -99 in Test Mode 1.

9-3 36.0°C Test

Set the rotary switch of each sensor to "36.0°C" to verify that the sensor indicates 36.0°C ± 0.2°C.

Note) Test Box 1 should be calibrated correctly.

(Test Point) * 36.0 ± 0.2

* AD converter indicates 580±15 in Test Mode 1.

9-4 Simulation test

Set the rotary switch of each sensor to simulated sensor drive to verify the operation of the control unit.

10. Initialization of Internal Air Circulation

Note) The V1.3B program does not permit "Initialization of Internal Air Circulation."

To detect any abnormalities in the internal air circulation, the conditions of internal air circulation stabilized at the reference ambient temperatures (30°C, 34°C, 37°C) are stored in the control unit. Should the fan motor stop or should any abnormality develop at the air outlet or inlet of the internal air circulation system, and internal circulation be disturbed, an alarm will occur.

Improper initialization of internal air circulation may cause abnormalities in the internal air circulation not to be detected properly.

° In such a case, it is necessary to re-initialize.

(Test Point) * Check that the unit is set properly. If the value shown of internal air circulation in Test Mode 1 is whithin the range of -30 to -50, the unit is set properly. However, if it is -10 or above, it is necessary to re-initialize.

10-1 Initialization Technique

Special operation of the keyboard enables you to perform initial setting of the internal air circulation system. Utmost care should be taken as this intentional misoperation

might destroy internal functioning of the incubator.

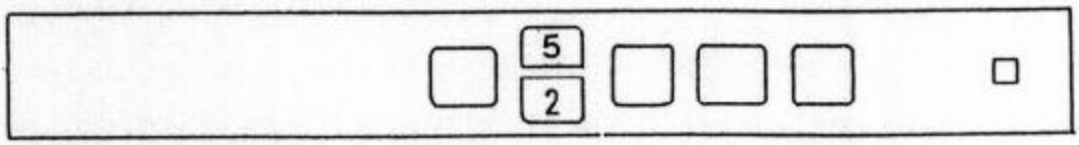

* Preparation of setting 1.

  ... Set the unit (access port, mattress platform, humidity reservoir, etc) securely. Fill the humidity reservoir with water to a specified level and set the adjusting lever to high humidification.

  Note) The unit, once set, cannot be reset until the initial setting of the internal circulation system is completed. Should any procedure be done on the unit in the meantime, initial setting may not be performed properly.

* Preparation of setting 2

  ... Turn the power switch on while depressing Panel Switch 2 (▼) and 5 (▲) simultaneously. Hold Switch 2 and 5 until the self-diagnosis program is completed.

  Initial setting of internal circulation is started when the RH/wall temperature display reads FAN.

* During initial setting

  ... The incubator air temperature changes automatically from 30 through 34 to 37°C. Stabilized conditions of internal circulation at each temperature range are memorized.

* Setting completed

... Initial setting of internal circulation is completed when the RH/wall temperature display reads END.

The incubator air temperature will be set and controlled at 34°C thereafter.

Note) Should initial setting be interrupted, conditions before setting will be retained. Should initial setting be completed and stopped simultaneously, it cannot be said for sure that such initially set values have been accepted by the control unit. Therefore, repeat initial setting.

11. Over-temperature Adjustment

Adjust VR1 on the over-temperature detection circuit (6-2) in the same way as in 8-2 Test Mode 2 (over-temperature test).

VR1 is accessed at the sensor connector lock key section on the power switch mounting panel on the side of the power unit.

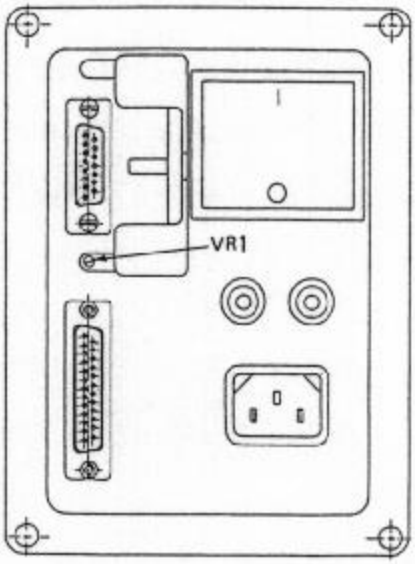

* Preparation of operation 1

  ... Turn VR1 fully clockwise (so that an over-temperature alarm may not be given when the incubator air temperature rises to 39.5°C).

* Preparation of operation 2

  ... As in 8-2 Test Mode 2, turn the power switch on while depressing Panel Switch 1 (setting), and hold Switch 1 until the self-diagnosis program is completed.

  Test Mode 2 (over-temperature test) is selected when the incubator air temperature setting reads 39.5°C.

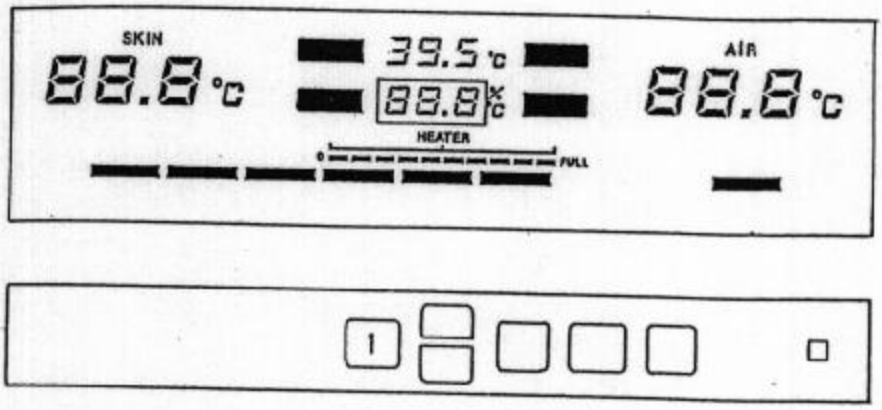

* VR1 adjustment

  ... When the incubator air temperature stabilizes at 39.5°C, turn VR1 slowly counterclockwise until an over-temperature alarm is given.

* Verification

  ... Turn the power switch off, lower the incubator air temperature and cancel the alarm. Select Test Mode 2 again and raise the incubator air temperature toward 39.5°C to verify that an over-temperature alarm is given with the incubator air temperature at 39.5 ±0.5°C.

LIST OF ALARMS ON V-850 INFANT INCUBATOR

Alarm Function	Alarm Condition	Delay Time	Heater output	Flashing/ Intermit-tent Sound	Flashing/ Continuous Sound	Illuminated /Continuous Sound	Automatic Reset	Manual Reset	15 min. Silence
Internal Air Circulation	Motor has stopped, fan isn't attached, air inlet or air outlet blocked, or any other trouble has developed within the air circulation system (except during warming-up).	Within 15 min.	Off	○	-	-	-	When the unit has returned to normal conditions.	-
Over-Temperature	Incubator air temperature is 39.5 ± 0.5°C	Immediately	Off	○ (Incubator air temperature indicator display figure flashes.)	-	-	Within the range of 34.0 - 37.0°C.		-
Power Failure	Power failure, disconnected power plug, broken power cable, actuation of circuit breaker, etc.	Immediately	-	-	-	○	-	-	-

Alarm Function	Alarm Condition		Delay Time	Heater output	Flashing/ Intermittent Sound	Flashing/ Continuous Sound	Illuminated /Continuous Sound	Automatic Reset	Manual Reset	15 min. Silence
Pre-selected Temperature (The alarm function will be enabled once the normal range is reached. An alarm will be given if more than 50 min. is over before the normal range is reached.)	Skin Temperature	Skin temperature is above pre-selected temperature by more than 1°C.	Within approx. 12 seconds	off	-	(Skin temperature indicator display figure flashes)	-	○	-	○
		Skin temperature is below pre-selected temperature by more than 1°C.	Within approx. 12 seconds	Unchanged	(Skin temperature indicator display figure flashes.)	-	-	○	-	○
	Incubator air temperature	Incubator air temperature is above pre-selected temperature by more than 1.5°C.	Within approx. 12 seconds	off	-	(Incubator air temperature indicator display figure flashes.)	-	○	-	○
		Incubator air temperature is below pre-selected temperature by more than 3°C.	Within approx. 12 seconds	Unchanged	(Incubator air temperature indicator display figure flashes.)	-	-	○	-	○
>37°C	Incubator air temperature is over 37.0°C.		Immediately	Unchanged	-	-	An audible alarm will sound for 2 seconds when the indicator lamp is illuminated.	○	-	-

Alarm Function	Alarm Condition	Delay Time	Heater Output	Flashing/ Intermittent Sound	Flashing/ Continuous Sound	Illuminated /Continuous Sound	Automatic Reset	Manual Reset	15 min. Silence
Temperature Sensor	Incubator air temp sensor, Over temp sensor, Air flow sensor, RH sensor, Wall temp sensor — shorted	Immediately	off	-	Defective sensor display figure and indicator flash.	-	-	When the unit has returned to normal conditions.	-
	Incubator air temp sensor, Over-temp sensor, Air flow sensor, RH sensor, Wall temp sensor — disconnected or connector is not properly connected.	Immediately	off	Defective sensor display figure and indicator flash.	-	-	-	When the unit has returned to normal conditions.	-
Skin temperature probe	Shorted	Immediately	off	-	Skin temperature display figure and indicator flash.	-	-	When the unit has returned to normal conditions.	-
	Disconnected or connector is not properly connected.	Immediately	off	Skin temperature display figure and indicator flash.	-	-	-	When the unit has returned to normal conditions.	-

flash.

Alarm Function	Alarm Condition	Delay Time	Heater Output	Flashing/ Intermit-tent Sound	Flashing/ Continuous Sound	Illuminated /Continuous Sound	Automatic Reset	Manual Reset	15 min. Silence
Heater Discon-nected	Heater is disconnec-ted, relay is defec-tive, connector is not properly connected, etc.	Immediately	off	Heater indicator flashes.	-	-	-	When the unit has returned to normal conditions.	-

13. Troubleshooting

13-1 When power switch to turned on

*1 No operation →

LCD unit signal line off.

(CPU,,heater, etc. are controlled properly, but no display)

Power isn't supplied, but no power failure detection.

a. Connector in power unit is off.
b. Check power failure detection circuit.

*2 Power failure alarm occurs →

AC power isn't supplied.

DC power isn't supplied.

a. Power cord off.
b. Connector in power unit is off.

*3 Power failure alarm occurs
LCD display abnormal
Backlight illumination →

CPU runaway

* Turn off power then on .. OK?

a. Check power unit totally.

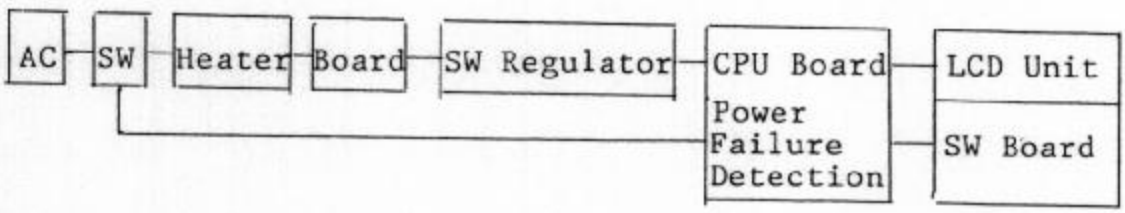

13-2 Immediately after self-diagnosis test

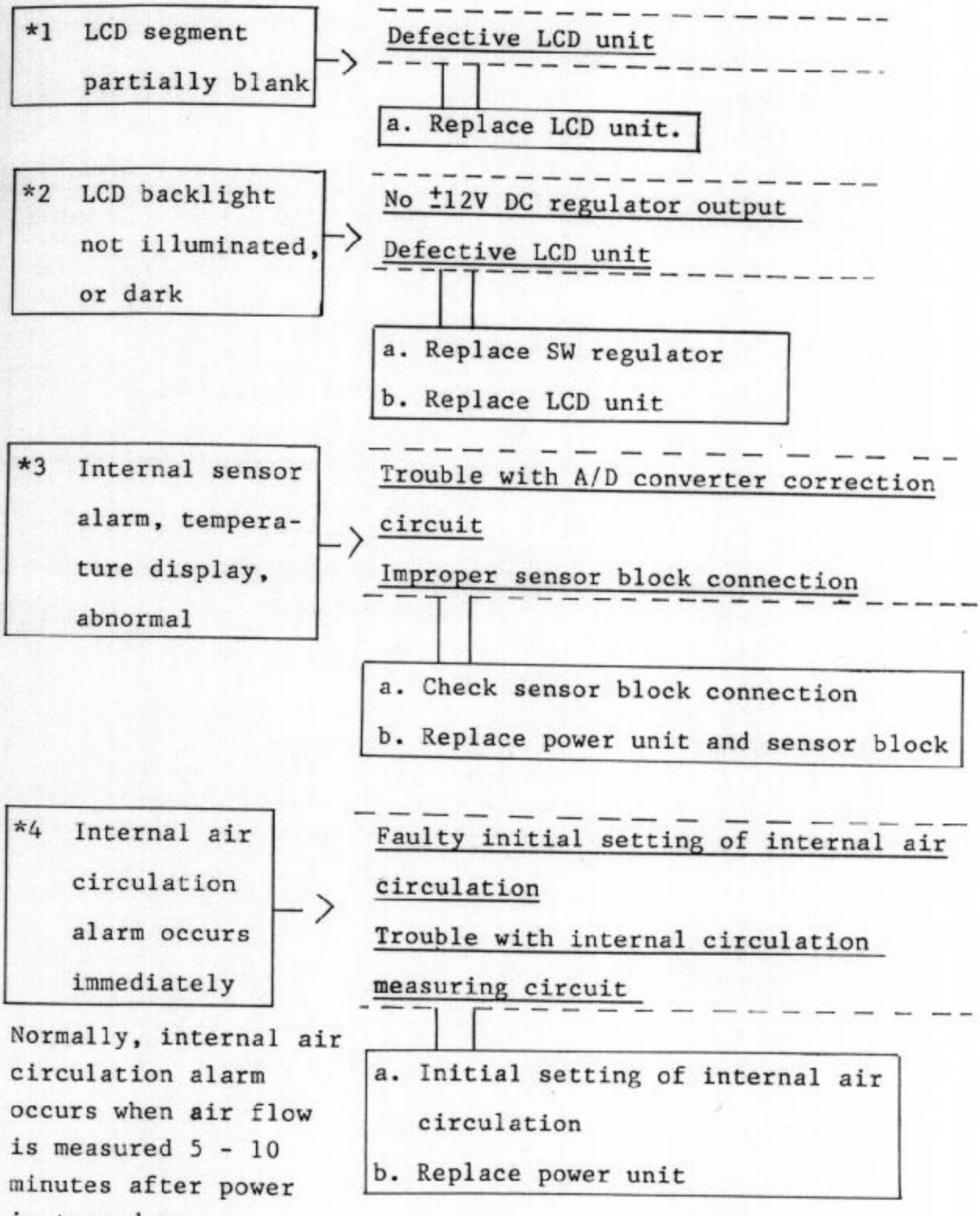

Normally, internal air circulation alarm occurs when air flow is measured 5 - 10 minutes after power is turned on.

13-3 Over-temeprature alrm

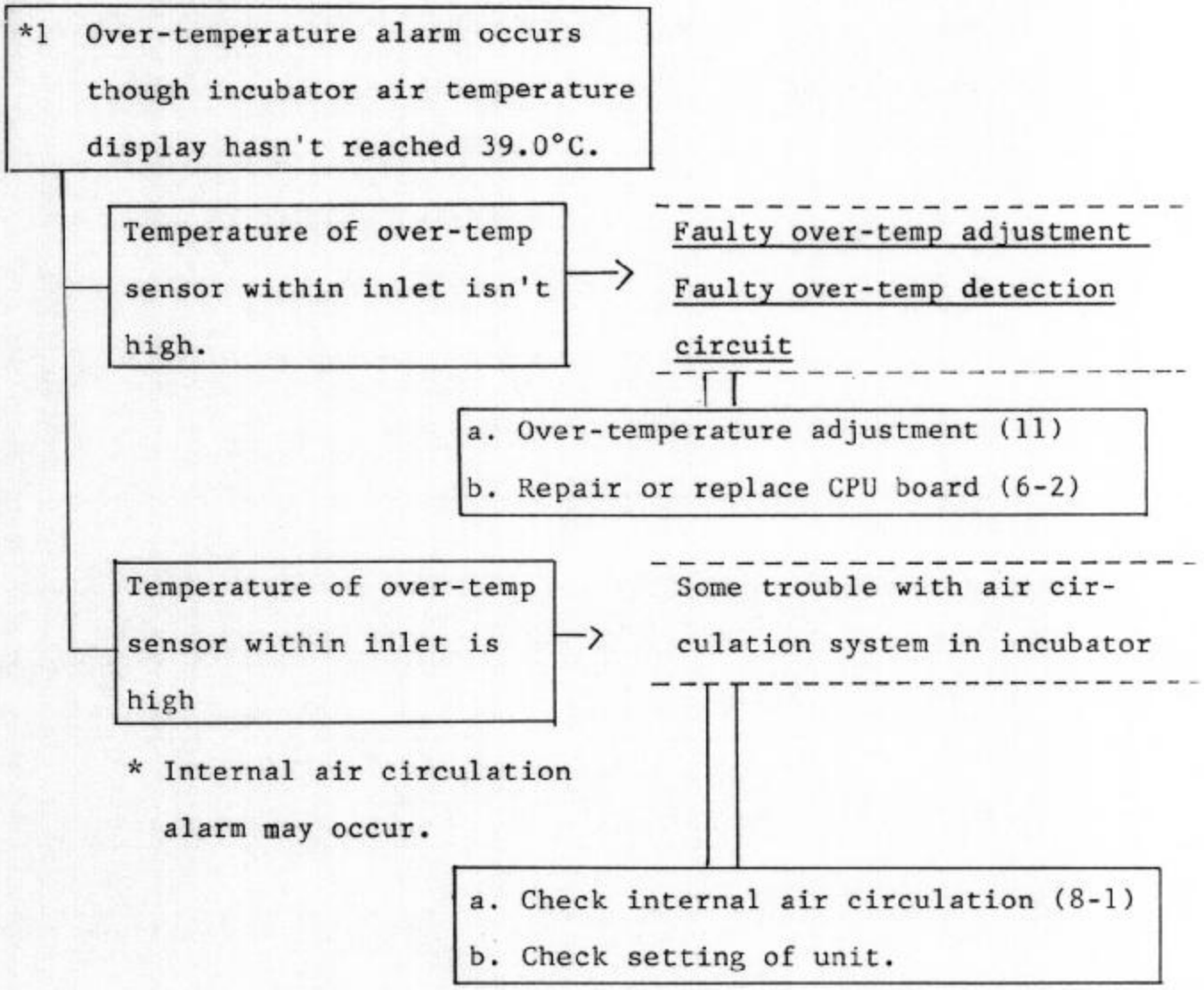

Note) The following is an example in which an over-temperature alarm occurs:

Following stabilized control (a), an access port was opened for treatment or other reasons (b). The temperature at the incubator air temperature sensor dropped, and the heater output was increased to compensate for the loss. Thus only the temperature around the heater was

raised (c). When the access port was closed, excessive heat raised the incubator air temperature temporarily, the Temperature at the over-temperature sensor near the heater was raised into the over-temperature detection range, and thus an alarm was given (d).

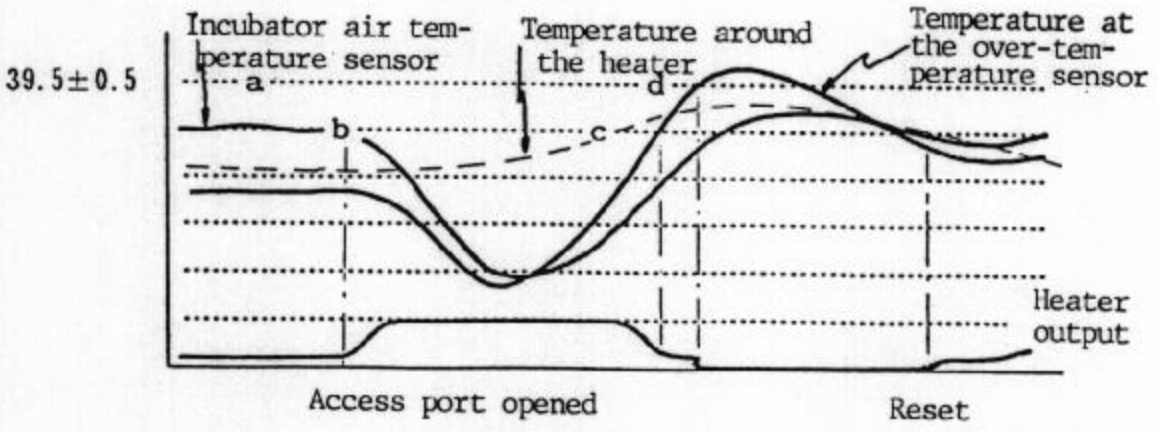

13-4 Internal air circulation alarm

*1 Internal air alarm occurs immediately after power is turned on. → See 14-2

*2 Alarm occurs →

Trouble with internal air circulation.

a. Anything to disturb internal air circulation?

(Check Point)

* Is fan motor active? Attached?
* Isn't air inlet or outlet blocked?
* Are incubator deck, hood, etc. properly installed?
* Is humidity reservoir properly installed?

*3 Alarm occurs →

Trouble with internal air circulation.

a. Isn't internal air circulation disturbed?

(Check Point)

* Sudden air flow disturbance and temperature change due to opened access ports might cause an alarm (8-1).

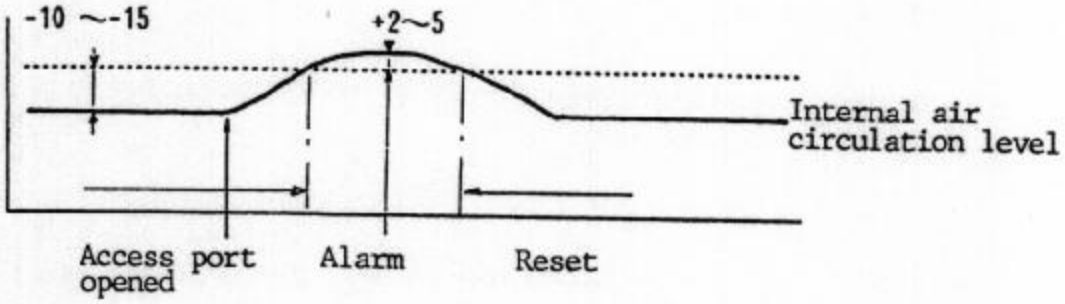

*4 Alarm occurs →

Faulty initial setting of internal air circulation

Trouble with internal circulation measuring circuit

a. Initial setting of internal air circulation (10)

b. Replace power unit

13-5 Internal sensor alarm

*1 Internal sensor alarm occurs, and temp displays are all blank. →

Status of sensor unit isn't inputted to CPU

- a. Sensor unit connector disconnected.
- b. Defective sensor unit. Replace.

*2 Internal sensor alarm occurs, and temp displays read LO or Hl. →

In case of LO, either sensor input temp is low or sensor disconnected.

In case of Hl, either sensor input temp is high or sensor shorted.

- a. Repair or replace sensor unit.
- b. Repair or replace CPU board, and A/D converter input circuit.

*3 Internal sensor alarm occurs, and temp displays are abnormal. →

A/D converter input value is normal. Trouble with temp correction.

- a. Repair or replace CPU board, and A/D converter input correction circuit

Ref.) 8. Function Test 3

13-6 Others

*1 Heater output display flashes. Alarm occurs.

Specified heater output isn't supplied.

a. Heater output connector disconnected.
b. Defective heater board or defective CPU board.
c. Heater disconnected.

*2 Temp and other sensors malfunction

External factor

a. Is sensor free from spills, dust, scar, etc. ?
b. Check power unit totally.

14. Reporting of Trouble

Should any trouble develop on V-850 Infant Incubator and repair be requested or inquiry made, please report to your repair department following the example of a report form given below to help inquire into possible causes of trouble.

* Trouble Report

Name of Hospital		Date	
Description & No. of Unit		No. of Power Unit	
Details of Trouble			
Factors Related to Trouble Reported			
1. Servo/Manual		2. Pre-selected Temperature	
3. Patient's Skin Temperature		4. Incubator Air Temperature	
5. Wall Temperature		6 RH	
7. Alarm			
8. Values Obtained in Test Mode 1.			
0ch		OP	
1ch		FA	
2ch		SE	
3ch		So	
4ch		H7	
5ch		V1	
6ch		V2	
7ch		Pd	
		Reported by	

15. P.C. Boards 8302A board

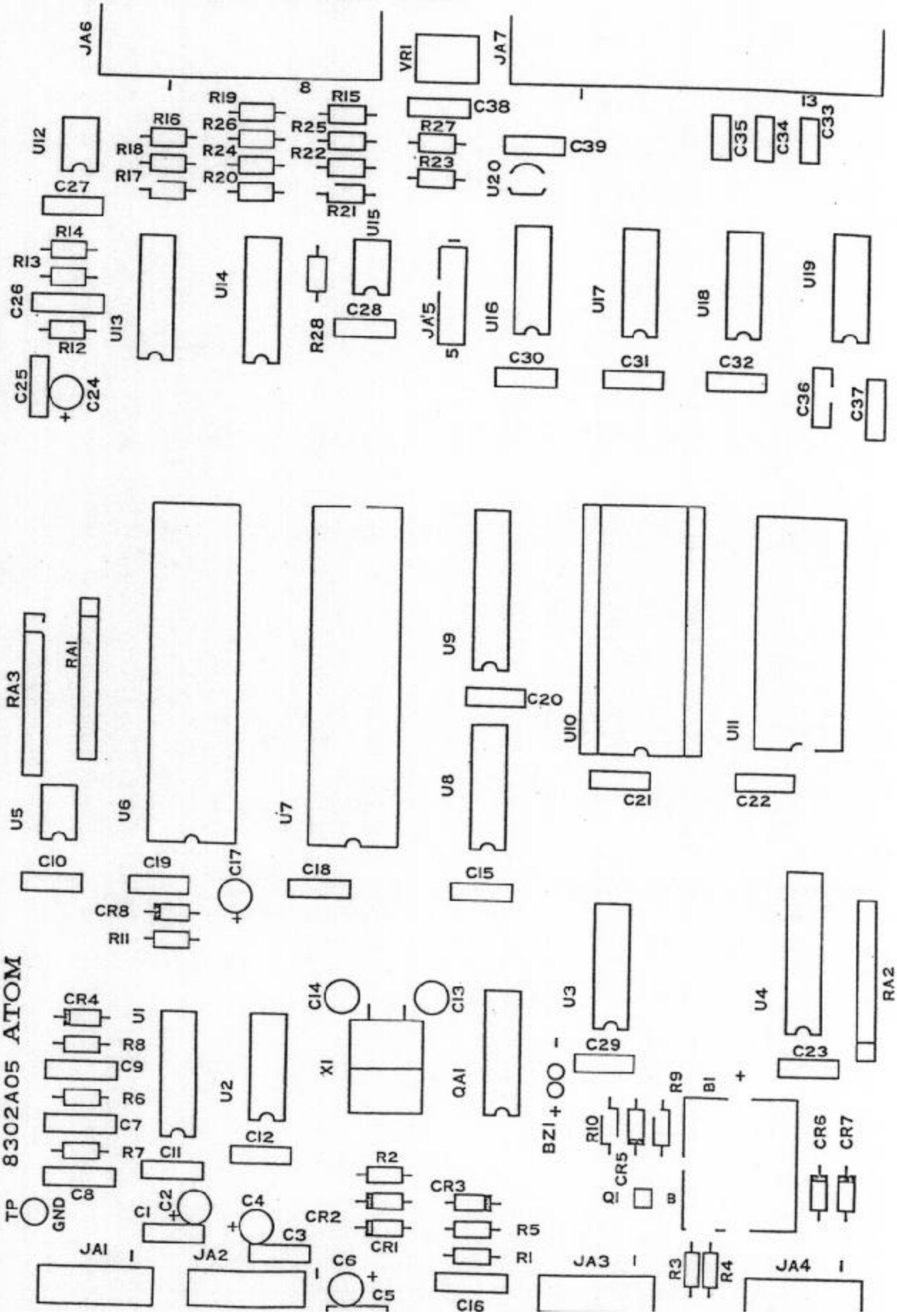

16. Board Components List

C230710 CKT BOARD ASSY:8302A 1/3

Part No.	Name & Description	Component No
C237016	CKT BOARD:8302A	PCB-1
N011011	FIXED CARBON FILM RESISTOR	R-4
N015111	〃	R-9
N017511	〃	R-10
N011621	〃	R-5
N015121	〃	R-2, R-3
N012031	〃	R-1, R-11
N0113413	〃	R-28
N012041	〃	R-7
N013341	〃	R-6
N011251	〃	R-8
N031000	FIXED METALIZED FILM RESISTOR	R-23
N034420	〃	R-27
N0311310	〃	R-25
N032001	〃	R-22
N032491	〃	R-12
N033011	〃	R-21
N033571	〃	R-26
N032492	〃	R-13, R-14
N040040	FIXED METALIZED FILM RESISTOR	R-15
N040050	〃	R-16
N040060	〃	R-17
N040070	〃	R-18, R-19, R-20, R-24
N060805	RESISTOR NETWORK	RA-1, RA-2, RA-3
N110012	SOLID TANTALUM CAPACITOR	C-2, C-24
N110025	〃	C-17
N110035	〃	C-4, C-6
N120002	CERAMIC CAPACITOR	C-13, C-14
N120003	〃	C-33, C-34, C-35
N120015	〃	C-3, C-5, C-36, C-37,
N120011	〃	C-1, C-10, C-11, C-12, C-15, C-18, C-19, C-20, C-21, C-22, C-23, C-25, C-27, C-28, C-29, C-30, C-31, C-32, C-38, C-39
N132045	METALIZED POLYESTER CAPACITOR	C-7, C-8, C-16
N132047	〃	C-9, C-26

C230710 CKT BOARD ASSY:8302A

Part No.	Name & Description	Component NO
N350004	SILICON DIODE	CR-1, CR-2, CR-3, CR-4, CR-5, CR-6, CR-7, CR-8
N400003	PNP TRANSISTER	Q-1
N420001	TRANSISTER NETWORK	QA-1
N480010	OPERATIONAL AMPLIFIER IC	U-15
N503008	LOW-VOLTAGE REFERENCE IC	U-12
N510003	A/D CONVERTER IC	U-13
N530430	CMOS IC	U-14
N530640	〃	U-2
N531120	〃	U-3
N531210	〃	U-1
N540040	CMOS HIGH SPEED CMOS IC	U-16
N540160	〃	U-17
N540400	〃	U-8
N541020	〃	U-4、U-9
N562001	16×16 BIT SERIAL NOVRAM	U-5
N470008		U-20
N470009		U-19
N470010		U-18
N580010	MICROPROCESSOR	U-7
N581010	MULTI I/O	U-6
N581030	MULTI I/O	U-11
P171002	IC SOCKET	(U-5)
P171003	〃	(U-10)
N070006	TRIMMER POTENTIOMETER	VR-1
N210001	CRYSTAL OSCILLATER	XL-1
P150301	PS CONECTER	JA-1, JA-2, JA-3, JA-4
P150108	PS CONECTER	JA-5
P150372	〃	JA-6
P150373	〃	JA-7
R015004	Ni-Cd BATTERY	B-1
N261009	BUZZER	BZ-1
P220009	SPACER	
V011273	SCREW	
V114302	SCREW	

C230710 CKT BOARD ASSY:8302A 3/3

Part No	Name & Description	Component NO
N570002	EPROM	U-10
C237806	INC-V13B2 ('87.9 PROGRUM)	
C237814	INC-V17B6 ('89.5PROGRAM)	

C230710 CKT BOARD ASSY:8302A 3/3

Part No	Name & Description	Component NO
N570002	EPROM	U-10
C237806	INC-V13B2 ('87.9 PROGRUM)	
C237814	INC-V17B6 ('89.5PROGRAM)	