Humphrey®
Field Analyzer

Series HFA II - i

Field Service Guide

CONFIDENTIAL & PROPRIETARY

Part No. 52235, Revision C
November 2005

PROPRIETARY NOTICE

TRADEMARK CREDITS

Carl Zeiss Meditec Inc.
5160 Hacienda Drive
Dublin, CA 94568

REVISION CONTROL LIST

Document: **Field Analyzer Series *HFA II - i* Field Service Guide**

Part No.: **52235 - Revision C**

Issued Date: **November 2005**

Listed at the bottom of each page is the part number of the field service guide, along with the Revision letter and date for that page (for example, 52235C1105). Subsequent revisions to a page will be noted by a corresponding change to the Revision letter and date.

Pages in this document are at Revision C unless noted otherwise below.

Note - *The Revision "B" Humphrey Field Analyzer Series HFA II-i Field Service Guide, P/N 52235 has been revised to Revision "C". The new revision updates all references from "Humphrey Systems" to "Carl Zeiss Meditec Inc. (CZMI)".*

Page	Revision	Page	Revision	Page	Revision	Page	Revision

Table of Contents

Section 1 - General Information

Section 2 - PM and System Checkout

Section 3 - Parts Removal / Replacement

Section 4 - Adjustment / Calibration

Section 5 - Troubleshooting

Section 6 - Diagrams

Section 7 - Parts

Appendices

Section 1 - General Information

Notes:

1.1 About This Field Service Guide

1.1.1 General Information

This *Service Guide* is the field service reference for troubleshooting, repair, adjustment, and calibration of the Models 720*i*, 740*i* and 750*i* *HFA II - i* Field Analyzers, manufactured by Carl Zeiss Meditec Inc. The information presented in this Guide assumes that the reader is already trained and experienced in operation and service of the Humphrey Field Analyzer Series 700.

This field service guide is designed to support Level 1 Field Service, which employs modular replacement of printed circuit boards and other assemblies that are most effectively repaired at a central repair facility. This is the service strategy used in U.S. domestic Field Service, and in Carl Zeiss Meditec Service training classes. See Section 1.3 for additional information regarding Level 1 and Level 2 Repair Center service.

The procedures in this field service guide assume that the reader is familiar with operation of the instrument. ***Complete operating instructions are contained in the HFA II - i User's Guide.*** Information contained in the User's Guide is not repeated in this field service guide. The User's Guide can be ordered separately by standard Carl Zeiss Meditec parts order. Refer to Section 7 for the User's Guide parts information.

The general layout of the field service guide is shown below. For greater detail, please refer to the Table of Contents.

Level 1 Field Service Guide Layout

Section 1 - General Information

Section 2 - Preventive Maintenance & System Checkout

Section 3 - Parts Removal/Replacement

Section 4 - Adjustment/Calibration

Section 5 - Troubleshooting

Section 6 - Diagrams

Section 7 - Parts

Appendices

1.1.2 Conventions

The following conventions apply in this manual:

- The terms *left, right, front* and *back* of the instrument are as viewed from the patient position, unless noted otherwise.
- Dimensions are given in inches unless noted otherwise.

1.2 About Service Bulletins

Field Service Bulletins are a vital element of service support. Bulletins are used to quickly convey technical information on a variety of field service topics, including:

- instrument design changes
- technical problems and corrections
- software updates
- new troubleshooting procedures
- problem alerts
- service manual revisions
- upgrade announcements/ procedures
- system checkout – checklist
- service disclaimer forms
- system work sheets

Service bulletins are used to issue revised pages for service manual/service guide updates.

Your service bulletins should be filed where easily accessible for quick reference.

NOTICE

Field Service Bulletins are Confidential and Proprietary, for the sole use of personnel employed by Carl Zeiss Meditec, Carl Zeiss Meditec affiliates, and authorized Carl Zeiss Meditec distributors.
Carl Zeiss Meditec has a well-deserved reputation for high quality, reliable instruments, unsurpassed in the industry.

As a Carl Zeiss Meditec employee, affiliate, or distributor you are required to handle your service bulletins as appropriate for proprietary and confidential information.

1.3 *HFA II - i* Service Strategy

1.3.1 Two-Level Service Strategy

A two-level service strategy is used for the *HFA II - i*: Level 1 for on-site service; and Level 2 for Repair Center service. Level 1 service employs modular replacement, wherein faulty circuit boards and certain other assemblies are replaced rather than repaired on-site. These faulty assemblies are shipped to a Carl Zeiss Meditec Repair Center for repairs. There are also certain procedures that require special equipment available only at a Repair Center.

Designated Repair Centers (currently Dublin, CA and Jena, Germany) are the second level of service for the *HFA II - i*. The Repair Centers perform major circuit board troubleshooting and repair, plus any other service action that requires special equipment or procedures not available in the field.

Several of the circuit boards in the *HFA II - i* are multilayer boards and use Surface Mount Technology (SMT) components. These boards require special equipment and techniques for troubleshooting and repair.

All service procedures (including instrument calibration) can be performed in the field, except for those listed below. For Carl Zeiss Meditec U.S. Domestic operations, the following procedures must be performed at the Carl Zeiss Meditec Repair Center.

- Circuit board troubleshooting and component replacement
- Repair of floppy, tape, and hard drives.
- Alignment of projection carriage rails and first projection mirror (top turret mirror)
- Repair of power supply assembly
- Repair of camera assembly

1.3.2 Three Steps to Completing an *HFA II - i* Service Call

The basic approach to an *HFA II - i* service call is outlined below. This typical process includes collection of general instrument calibration data and light intensity data both *Before* service and again *After* service. The process is described in detail in Section 4.8.1. For guidelines, refer to *HFA II - i* Field Service Paperwork Requirements (Section 1.3.3).

1. **Obtain the *Before* Light Intensity instrument data (4.8.1).**

   This step assumes that the *HFA II - i* is operable; that is, it will power up to the Main Menu without error. This data gives the service representative a base from which to evaluate the light intensity operation of the instrument, and a point of comparison if recalibration is required.

If a repair is required to render the instrument operable, and as long as the repair does not affect the original light intensity data, the repair can be performed and then the *Before* data can be acquired.

The following repairs will affect light intensity data:

- Hard Drive replacement or initialization;
- cleaning or replacement of the ND wedges, color wheel*, or brightness detector;
- replacement of the Motor Driver PCB.

**** Note - Cleaning or replacing the color wheel will not affect the white/white Before light intensity data; it only affects the blue light intensity data.***

2. Perform the needed instrument service.

   This step includes any parts replacement, adjustments, calibration, cleaning, etc. to repair, update and/or upgrade the instrument.

3. Obtain the *After* light intensity instrument data (4.8.1) if the *Before* data was not within specifications, or if something was done during service that affects light intensity (see list in step 1).

   When instrument service has been fully completed (but before reinstalling the outer covers), a final evaluation of the instrument may be required (see Section 2.1, System Checkout). During this step, the *Before* and *After* light intensity data are compared. If necessary, a Calibration Notice is given to the customer.

1.3.3 *HFA II - i* Field Service Paperwork Requirements

The following guide identifies the paperwork that ***must*** be completed and sent to Carl Zeiss Meditec Customer Service following each service call or preventive maintenance visit on the *HFA II - i* by U.S. Domestic service engineers. ***For all service engineers,*** this guide identifies actions essential to properly perform various types of service calls on the *HFA II - i*.

For *all* service calls:

☐ FSR

☐ *Before* Foveal ‡

If replacing/initializing Hard Drive; cleaning/replacing brightness detector, ND wedges, or color wheel; or replacing Motor Driver PCB:

☐ If obtainable, include all items from list above under *"For all service calls,"* plus items listed below under *"Additional if light intensity recalibration is required"*. If possible, obtain *Before* paperwork prior to the repair.

Additional if upgrade to Blue-Yellow:

- ☐ *Before* and *After* Light Intensity Verification Printouts
- ☐ *After* Foveal ‡
- ☐ *Calibration Notice**, if needed.

If performing PM:

- ☐ Covered by items listed above under *"For all service calls."*
- ☐ *Before* Light Intensity Verification Printouts

Additional if light intensity recalibration is required:

- ☐ *Before* and *After* Light Intensity Verification Printouts
- ☐ *After* Foveal ‡
- ☐ *Calibration Notice**, if needed.

Notes -

* ***Formerly called "Doctor Card" or "Doctor Letter."***

‡ ***For Model 720i, see Section 4 in the HFA II - i Field Service Guide.***

1.4 Configuration Parameters

Configuration parameters can be entered and stored in the system by the user. This data is stored on the hard disk. Calibration data also is stored on the hard disk. There is the possibility that this data may become altered or erased during servicing of the instrument.

To minimize the possibility of altering the calibration values, configuration parameters or doctor setups during service, the following practices should be observed.

- Whenever possible, when servicing a customer's instrument, backup the calibration values on the calibration values disk. This option is available via the Calibration Menu.
- Whenever possible, when servicing a customer's instrument, backup the customer-selected configuration. This option is available via the Setup and Additional Setup menus.
- When finished servicing the instrument, restore the customer's configuration selections.
- Never intentionally alter the customer's existing doctor setups.

1.5 Precautions

The following precautions should be observed whenever the *HFA II - i* is being installed or serviced. Point out to the customer any potential hazard and the appropriate corrective action.

WARNING: *The CRT and associated circuitry can deliver a lethal shock. Always employ standard high-voltage safety precautions when working around the CRT circuitry. DO NOT use metal tools when making CRT adjustments.*

General Safety Precautions

1. The instrument is equipped with a grounding-pin power plug. The instrument must be plugged into an outlet with a properly grounded receptacle.

2. Ensure that the fuses installed in the instrument and the power table are of the proper rating.

3. Use of an extension cord is not recommended. Doing so may compromise the safety of the operator and/or patient.

4. Do not overload the AC outlet being used to operate the instrument.

5. If the power cord or plug on the instrument is damaged, a shock or fire hazard may result. Do not allow continued operation of the instrument until the damaged cord or plug has been replaced.

6. To prevent personal injury and damage to the instrument:
   - Use only the power table recommended by Carl Zeiss Meditec.
   - Do not place the instrument on uneven or sloped surfaces.

7. For stability of the power table, strictly adhere to the following guidelines:
   - Ensure that the instrument is secured to the power table with the screws provided.
   - ***Do Not*** place the instrument near the operator end of the table during setup, service, or operation.
   - Before servicing the instrument, cycle the table to its lowest position and ensure that the slider is locked in position.

8. Ensure that the instrument is installed on a stable, vibration-free surface.

9. Be cautious when you first touch the projection assembly. ***The projection assembly can become extremely hot*** any time the projection bulb is lit for prolonged periods, such as during sustained patient testing.

10. The bowl lamp voltage is approximately 550 volts — AVOID TOUCHING!

Instrument Precautions

1. When the instrument is being unpacked, save the shipping materials for possible future use. Whenever the instrument is shipped, it must be properly packed to prevent damage. ***Do Not*** place objects in the bowl during shipment of the *HFA II - i*.

2. When spare parts are received, save the shipping materials for returning the defective part(s), if appropriate.

3. Handle interconnecting cables carefully. Many of these are constructed of extremely small coax cable and are easily damaged.

4. To avoid possible damage to circuit board components, do not plug/unplug cables while power is applied to the instrument.

5. ***Do Not*** use Windex® to clean the touch screen, as it can scratch plastics. The recommended cleaner is a 50% solution of isopropyl alcohol and water. Otherwise, use a commercially available anti-static plastic cleaner.

6. Use extreme care whenever working in or near the bowl to avoid causing marks or scratches to the inner bowl surface.

7. Do not rub the inner bowl surface while attempting to clean it; rubbing will cause a noticeable polished area in the bowl.
8. Do not touch the glass surface of the projection lamp with your bare fingers. Any oil, dirt or grease on the lamp can shorten its effective life and diminish light output.
9. Do not place items on top of the unit; the internal mechanism of the instrument is very close beneath the top cover.
10. Ensure that none of the ventilation openings in the instrument are blocked. Excessive heat buildup within the instrument can cause instrument failures.
11. *DO NOT* flex the circuit boards. This instrument uses multilayer circuit boards. Multilayer circuit boards are inherently susceptible to damage by excessive flexing.
12. Proper ElectroStatic Discharge (ESD) precautions must be observed whenever you are disassembling or handling the instrument's circuitry. Many of the components are extremely vulnerable to static discharge damage. A Field Service Static Protection Kit is available for order and must be used for ESD protection during service of this instrument. Refer to Appendix A for details regarding this kit.
13. An abrupt, harsh noise will ensue if the chinrest comes up against its travel limit during chinrest movement. Moving the chinrest up against its limits for a few seconds causes no mechanical harm.

1.6 Internal Layout

The parts drawings in Section 7 of this Field Service Guide illustrate the internal physical layout of the instrument. Diagrams in Section 6 illustrate the functional layout of the instrument.

1.7 Special Topics

1.7.1 The Touch Screen

The *HFA II - i* uses a transparent, analog, resistive-membrane touch screen. It is constructed of two pieces of thin, highly linear, electrically conductive film (Indium Tin Oxide). The two pieces of film are separated by a small air gap. The air gap is maintained by small (.001"), dielectric spacer dots.

Each film sheet has a set of parallel bus bars applied along opposite edges of the film. The two sheets are oriented so that the bus bars on one sheet are perpendicular to those on the other sheet. Slight pressure will cause the conductive surfaces to come into contact. The location of the contact point can be detected by a logic circuit measuring the voltage found at that particular point.

The analog type of touch screen gives a "voltage divider" analog response that allows positional determination.

1.7.2 Gaze Tracking

The *HFA II - i* uses two systems for measuring patient fixation: the standard Heijl-Krakau blind-spot monitoring and the IR Gaze Tracking System. Both methods can be used, either together or alone, or they can both be turned off, as required. This description covers the IR Gaze Tracking System.

The direction of a patient's gaze is determined in two steps: first, a reflex marker is established on the corneal surface; and second, the location of the pupil center is determined.

Gaze tracking is initialized in the following manner when a selected test is first started:
The patient is asked to fixate on the central illumination LED. Gaze tracking turns on the reflex gaze IR LED located just under the diamond fixation pattern and turns off eye illumination briefly . Light from the LED is reflected off the cornea, and back to the IR sensitive camera (Figure 1-1). The majority of the cornea appears black except for the reflected spot. This image is digitized and stored in memory. The reflected spot is referred to as the reflex marker (Figure 1-2). Because the corneal surface is rounded, the reflex marker will move very little even if the patient's eye rotates, and thus the marker becomes a (relatively) stationary reference point.

Next, the system locates the pupil center by illuminating the entire eye with the two IR LEDs located either in the bottom of the bowl, or in the trial lens holder (when in the raised position). The iris appears bright with a dark pupil (Figure 1-3). This image is also digitized and stored in memory. It is the relationship between the location of the reflex marker on the cornea and the location of the pupil center that determines fixation (Figure 1-4).

Note - When gaze tracking is being initialized, it appears as repetitive "strobing" when viewed by the operator via the video insert on the HFA II - i monitor.

During a test, each time a spot is projected into the bowl, the locations of the reflex marker and the center of the pupil are compared to the initial images stored in memory. If the patient is fixating correctly, the positional relationship between the reflex marker and the pupil center will be the same as that of the stored images (Figure 1-4). If the patient is off fixation, the positional relationship between the reflex marker and the pupil center will be different, as in Figure 1-5. The greater the misalignment, the higher the mark on the Gaze Graph (Figure 1-6).

(continued)

Spikes that appear on the Gaze Graph (Figure 1-6) are analyzed as follows:

- Upward spikes indicate that the patient has lost fixation;
  - a spike that reaches the top horizontal line (or higher) indicates 10 degrees (or more) off fixation;
  - a spike that extends halfway to the top line indicates 5 degrees off fixation.
- Downward spikes indicate as follows:
  - a short spike downward indicates that the gaze at that time cannot be determined by the software.
  - a long spike downward indicates that the patient blinked at the time fixation was checked.

The absence of marks on the graph indicates proper fixation.
Possible problems associated with the gaze tracking system are reflections from the trial lens, fingerprints on the trial lens, an improperly aligned trial lens holder, an improperly calibrated or aligned Gaze Tracking box, and excessive patient tearing.

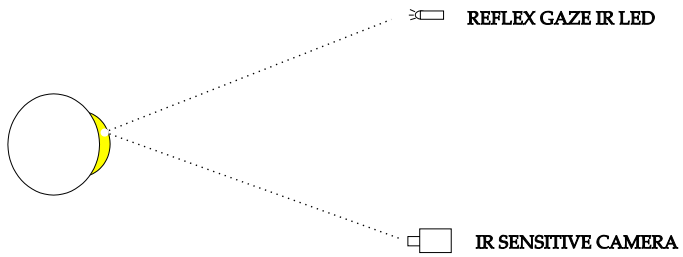

FIGURE 1-1. Location of Corneal Reflex Marker

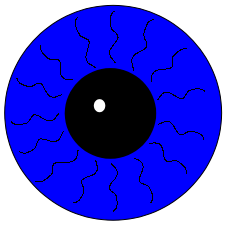

FIGURE 1-2. Corneal Reflex marker Location Digitized and Stored in Memory

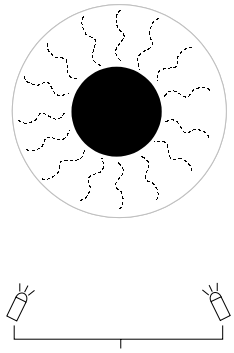

FIGURE 1-3. Determining the Pupil Center

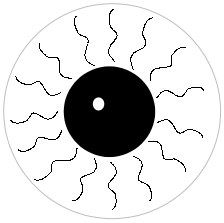

FIGURE 1-4. Patient Fixating – Corneal Reflex Marker and Pupil in Proper Relationship

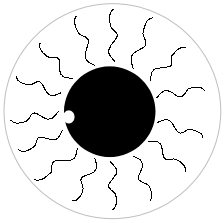

FIGURE 1-5. Patient *Not* Fixating – Corneal Reflex Marker and Pupil *Not* in Proper Relationship

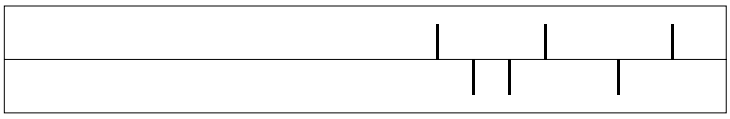

FIGURE 1-6. Gaze Graph

1.7.3 Head Tracking / Auto Pupil / Vertex Monitoring

These three features are dependent on the Gaze Tracking system. If Gaze Tracking has successfully initialized, any of these three features can be utilized.

Head Tracking

The Head Tracking feature is designed to lessen the appearance of a trial lens artifact image when the patient's eye is off center in relation to the center of the trial lens holder. The intent is to reduce the possibility of inducing an arc-like defect or ring scotoma in the patient's field test results.

Head Tracking is active when the trial lens holder is in the up position and Head Tracking has been set to ON in the setup menu. The Head Tracking feature will track the center of the eye in relation to the trial lens holder. If the patient's eye moves from the center of the trial lens holder by more than 3 mm for more than one consecutive sample, the head tracking feature will gently move the chinrest and headrest to automatically reposition the patient's eye in the center of the trial lens holder. The tracking will stop if the eye doesn't follow the correction. Tracking begins when the test is started. This feature will operate properly only if the patient properly rests on the chinrest.

Auto Pupil

When the Auto Pupil feature is set to ON in the setup menu, the gaze monitoring system will determine the size of the patient's pupil to the nearest 0.5 mm at the beginning of each test (during initialization of gaze tracking), and will automatically enter that information into the Patient Data information screen, marked Auto (*).

Vertex Monitoring

The Vertex Monitoring feature is designed to lessen the appearance of a trial lens artifact image when the patient's head moves backwards (away from) the trial lens holder. The intent is to reduce the possibility of inducing an arc-like defect or ring scotoma in the patient's field test results. Vertex Monitoring will alert the operator (via a double beep) if the patient's eye moves more than 7 mm away from its original position for any one measurement. (The sample rate is once every question.)

Vertex distance measurement is obtained during gaze initialization. During gaze initialization, the two IR LEDs on the trial lens holder appear as two dots of light on the corneal surface. (Refer to 1.7.2 Gaze Tracking for a complete description.) The distance between these two dots will decrease as the head moves away from its original position. If the distance exceeds the software limits, an alert will sound. The test continues, and a pop-up window appears allowing the user to reinitialize, continue without reinitializing, or turn off vertex monitoring.

1.7.4 *HFA II - i* Light Intensity Fundamentals

The *HFA II - i* uses one detector mounted at the end of the turret to measure both spot and bowl intensities. The projection lamp voltage is controlled by software to set maximum stimulus brightness. This means that the lamp can be operated at a lower voltage when the lamp is new; and as it ages, more voltage is applied in order to maintain the same level of brightness. This increases lamp life expectancy and reduces power consumption.

During light intensity calibration, the projection calibration value is stored in memory and set as close as possible to obtain 929 Ft-L or 10,000 asb of light output. The background lights are fluorescent and the calibration values are set as close as possible to obtain 2.92 Ft-L or 31.5 asb. During calibration, light attenuation is measured at 175 different points on each of the two ND wedges, and the results are stored in memory. The two ND wedges are used in combination to obtain the desired brightness of the projected spot. The duration of the spot is 200 ms and is controlled by the software operating the shutter, located between the projection lamp and the ND wedges.

During the power-on sequence, the bowl intensity is set to the calibrated value (2.92 Ft-L or 31.5 asb). The brightness detector is then pointed at a black patch located on the inside of the front cover, the shutter is closed, and a measurement is made by the detector. This establishes the zero asb reference. Next, the shutter is opened, and a spot projected on the bowl approximately 35E above center is measured by the detector. The projection voltage is adjusted to match the calibration value stored in memory. This measurement sets the maximum brightness level (10,000 asb, or 0 dB). These two measurement points determine the slope of the light from dark to maximum brightness.

If the measured intensity varies from that stored during calibration, the lamp voltage is adjusted and measured again. This continues until the stored intensity and measured intensity match. If the voltage is adjusted above 10 V, the test will fail and a projection lamp error message will appear on the screen. If the test does not fail, ten different points on each ND wedge are measured and compared with their stored values. If these values deviate more than ±.5 dB from the stored values, the test will fail and a wedge failure error message will be displayed.

1.7.5 Comparing HFA II and *HFA II - i*

Hardware -

The *HFA II - i* version differs from the prior production version, the HFA II, in that significant upgrades have been made.

The *HFA II - i* uses an off-the-shelf CPU PCB featuring an Intel Celeron 433 MHz processor, while the HFA II uses a 20 MHz Motorola 68020-based processor. The new CPU PCB dramatically decreases the test processing time resulting in significant overall test time reduction. The *HFA II - i* CPU PCB contains 64 megabytes of DIMM memory while the HFA II has 4 megabytes of memory on the current CPU. The increase is significant in the ability to support software features planned for the future; in particular, the implementation of ©*Ensemble*. In

addition, the new board features components selected to ensure ease of parts availability, particularly integrated circuit components.

The *HFA II - i* CPU PCB uses an IDE hard drive controller. The HFA II CPU PCB uses a SCSI hard drive controller. The *HFA II - i* has an IDE hard drive while the HFA II uses a SCSI hard drive. Note that the two drives are not interchangeable.

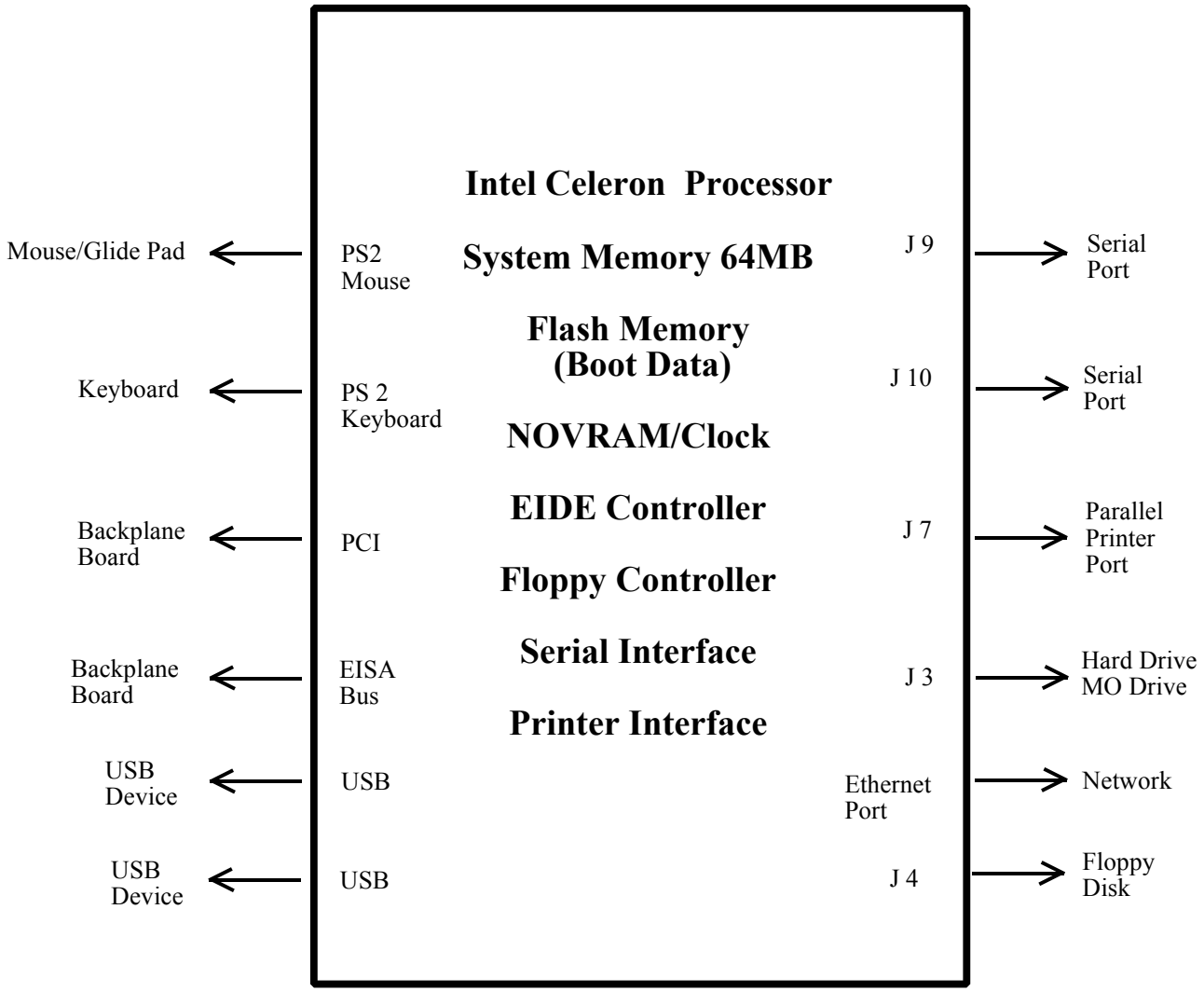

FIGURE 1. CPU PCB Functions and Interconnects

Many of the unique functions that the HFA II CPU PCB supported are now included in the *HFA II - i* Backplane PCB. The functions of the Backplane PCB include; the patient switch, touch screen, camera frame grabber, and video.

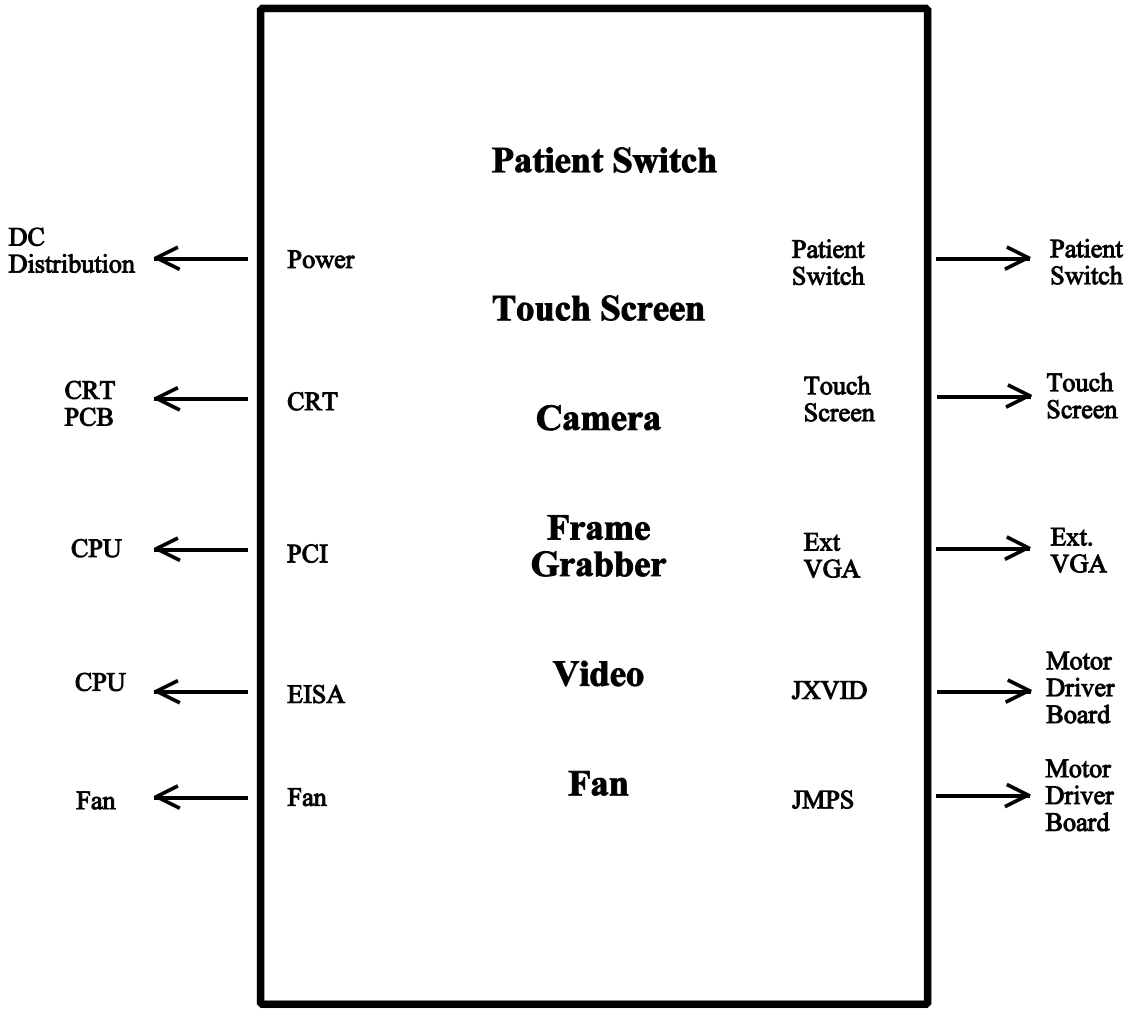

FIGURE 2. Backplane PCB Functions and Interconnects

The DAT streamer tape of the HFA II has been replaced with a magneto-optical medium reader in the *HFA II - i*. Besides reducing cost, the new *HFA II - i* drive provides greater long-term storage of large patient files.

For EMI considerations, the *HFA II - i* CPU PCB and Backplane PCB are housed in a metal enclosure. The enclosure is bolted the chassis in the location of the HFA II CPU PCB.

To accommodate the enclosure the rear cover was redesigned. The rear cover does not make use of 1/4 turn fasteners.

The *HFA II - i* has a larger capacity power supply to provide the additional Vcc power required for the *HFA II - i*.

The *HFA II - i* uses a new Motor Driver Board (MDB). The new MDB will ensure longer component availability.

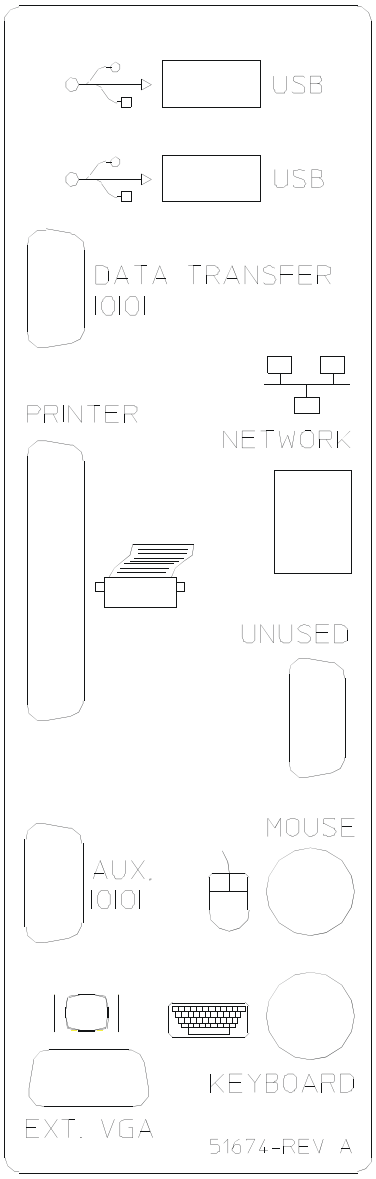

FIGURE 3. *HFA II - i* Interconnects

The external connections to the *HFA II - i* are considerably different from those of the HFA II. Two USB and a network port have been added to the *HFA II - i*. These ports are inoperative at this time. While the HFA II had three serial ports, the *HFA II - i* has only one functional serial port.

Service Changes -

Calibration of the *HFA II - i* will differ from the HFA II only in the fact that the calibration data will be stored differently. In the HFA II the calibration data is stored in the EEPROM, located on the CPU PCB. In the *HFA II - i*, the calibration data is stored in a file on the hard drive. An additional copy of the calibration data is stored on a floppy diskette. The calibration diskette is stored behind the rear cover door of the instrument. In cases where the calibration file on the hard drive becomes damaged, the calibration data from the floppy can be loaded back onto the hard drive via the main calibration menu.

The Diagnostic Service Tool (DST) has been changed significantly for use on the *HFA II - i*. The DST will no longer perform the CPU PCB tests. These functions will be performed using the Quick Tech-Pro Tool, its operation will be described in a future service bulletin.

The Quick Tech-Pro Tool is used with the *HFA II - i* to test the CPU PCB functions, IDE hard drive, magnetic optical drive, printer, serial ports and parallel port. This utility is a self booting application that will allow the use of three prepared diagnostic programs designed for the *HFA II - i,* or the choice of selecting any of the individual tests in the Quick Tech 2000 Pro test library.

Unlike the HFA II, the *HFA II - i* has a BIOS that can be modified as needed with future updates. See Appendix E for BIOS Configuration.

A significant difference between the HFA II and the *HFA II - i* is that the HFA II operating system would allow low level formatting of the floppy drives (formatting a previously unformatted diskette). This is not possible with the *HFA II - i*. ***The HFA II - i will only allow a preformatted diskette to be reformatted . The HFA II - i will not format unformatted floppy diskettes.***

The *HFA II* and the *HFA II - i* use the same floppy drives, but the jumper settings are different for the two models. See Bulletin FA2i-003(x) for details on jumper information.

The *HFA II - i* will no longer support the laptop connection and CPU diagnostics. CPU diagnostics will be performed with the Quick Tech-Pro Tool.

Operational Changes -

Startup screen information, such as the model number, hard option code, soft option code, motor board code and CPU board code, will not be displayed during the bootup process. This information will be displayed on the "i" screen. The model, serial number, operating system revision, language revision, and hardware option code are found on the "i" screen. See the sample "i" screen printout in Appendix J.

The File Functions screen has some minor changes. The Initialize Disk button has two options. The first option is to format the floppy diskette and the second option is to format the magnetic optical diskette. The Backup Restore Function no longer has a tape option for source or destination, but has a magnetic optical option.

The Calibration Screen has two new buttons. The first button is the Save button. The Save button will save the calibration data that is currently stored on the hard drive to the floppy diskette. The calibration data that was saved prior to the last save will be erased. The second button, the Restore button, will copy the calibration data from the floppy diskette to the hard drive and replaces the previous data on the hard drive.

Software Loading Changes - While the HFA II used three floppies to load the operating system and application software, the *HFA II - i* requires four diskettes. The DST tool required one disk with the HFA II, but requires three diskettes for the *HFA II - i*.

In all other aspects, field operation of the *HFA II - i* is essentially identical to the HFA II.

1.8 Peripherals

- Mouse
- Keyboard
- Monitor
- Wireless Printer Device
- Uninterruptible Power Supply (UPS)
- HP LaserJet Printer

Peripheral devices may be used with, and purchased for use with, the *HFA II - i*. The information presented in this section is for guidance only. In no way does the information presented here imply that any peripheral device purchased will operate in conjunction with the *HFA II - i*. The only exception to this statement is if the peripheral device was purchased directly from Carl Zeiss Meditec.

Every effort has been taken to ensure that the *HFA II - i* software and hardware are compatible with the majority of off-the-shelf purchased peripherals described below. However, please be aware that some may not be. It is the customer's responsibility as a consumer to ensure that they follow our purchase guidelines and that they resolve any non-operational issues with the vendor from which they purchased the peripheral device.

C Mouse

Carl Zeiss Meditec provides a keyboard with glide pad for use with the *HFA II - i*. If your customers choose to use another type pointing device for use with the *HFA II - i*, choose a PS2, Microsoft-compatible serial mouse, trackball, or keyboard with integrated trackball or glide pad. The mouse or glide pad must be connected to the mouse connector (see Appendix B, Figure B-1 for port location). The mouse may be used in place of, or in conjunction with, the touch screen and keyboard.

C Keyboard

Carl Zeiss Meditec provides a keyboard as standard equipment on the *HFA II - i*. Should you decide not to purchase the keyboard from Carl Zeiss Meditec, use the following specifications:

- C IBM 101 with standard PS2 connector.

The keyboard is used in conjunction with the touch screen.

C Monitors

Carl Zeiss Meditec does not sell external monitors for the *HFA II - i*. However, when selecting an external monitor, choose any standard PC monitor that has the following specifications:

- C Muiltisync SVGA (or VGA)
- C Capable of Minimum 70 Hz capability
- C Minimum 640 x 480 pixels
- C An interface cable of appropriate length

Please note that a color monitor may be purchased and used; however, it will only display in black and white.

C Wireless Printing Device

Carl Zeiss Meditec does not sell a wireless printer device (provides wireless connection to the printer) for the *HFA II - i*. However, the appropriate drivers have been added to the software to enable the AeroComm™ GoPrint™ device to be used with the *HFA II - i* and *HFA II - i*-compatible printers. Details on connecting and configuring the GoPrint can be found in the *HFA II - i* User's Guide.

C Uninterruptible Power Supply (UPS)

Carl Zeiss Meditec does not sell a UPS (provides battery backup during power loss). However, when selecting a UPS for use with the *HFA II - i*, note the following specifications and recommendations:

- C The UPS must have a minimum 450 VA rating.
- C It must be dedicated to the *HFA II - i*. Do not connect the power table or other devices into the UPS.
- C Recommended model: APC smart UPS 620.

Power backup during power loss will depend on the type of UPS selected. Consult a local supplier for details.

C HP LaserJet Printer

Carl Zeiss Meditec does not sell HP LaserJet Printers. Refer to Appendix D, Approved Parallel Printers for details on using the HP LaserJet.

1.9 Specifications

HFA II - i Field Analyzer

Physical Characteristics

Dimensions	23" H x 22.25" W x 19.25" D (58.4 x 56.5 x 48.9 cm)
Weight	87.6 lbs (36.3 kg)
Recommended Room Size	106" x 64" (269.2 x 162.6 cm) (Ventilation recommended)

Environmental

Operating Temp (ambient)	41 to 95E F
Humidity (ambient)	20 – 85%
Heat Generated	1,570 BTU/Hr (460 W)

Electrical

Input Power	100 – 120 V @ 4 A, 50-60 Hz 230 V @ 2 A, 50 Hz

***HFA II - i* Miscellaneous**

Item	Yes	No	Details
Return Ground Connector	●		
Overcurrent Protection	●		Fuses
Hospital Grade Plug	●		
Leakage to Patient			See *Compliance Standards* and *Directives* in this section
Dedicated Circuit Required?		●	
Patient Connections?		●	Not applicable

Power Table

Table A = Power Table with a printer mounted beneath the table.
Table B = Power Table ***without*** *a printer mounted beneath the table.*

Physical Characteristics

Table A	Top:	35.5" W x 16" D (90.2 x 40.7 cm)
	Base:	34" W x 29" D (86.4 x 73.7 cm)
Table B	Top	24" W x 14.5" D (61.0 x 36.9 cm)
	Base:	34" W x 29" D (86.4 x 73.7 cm)
Recommended Room Size	106" x 64" (269.2 x 162.6 cm)	

Cycle Height (Table A and Table B)

Low End:	26" (66.1 cm)
High End:	40" (101.6 cm)

Power Table Miscellaneous

Item	Yes	No	Details
Return Ground Connector	●		
Overcurrent Protection	●		Fuses
Hospital Grade Plug	●		
Leakage to Patient			See *Compliance Standards* and *Directives* in this section
Dedicated Circuit Required?		●	

Printrex Printer

Physical Characteristics

Dimensions

Panel-mount printer . . . . . 4.1" H x 11.9" W x 4.97" D (10.4 x 30.2 x 12.6 cm)

Weight

Panel-mount printer . . . . . 5 lbs. (2.3 kg)

Environmental

Operating Temp . . . . . +41 to +104E F (+5 to +40E C)

Storage Temp . . . . . –40 to +140E F (–40 to +60E C)

Acceleration (Non-operating) . . . . +3 G, 0 to 50 Hz, 3 axes

Electrical

Power . . . . . 350 VA max

Compliance Standards and Directives

Refer to the Humphrey Field Analyzer II - i User's Guide for the most current standards.

Section 2 - PM and System Checkout

Notes:

2.1 System Checkout Checklist

Following is a copy of the *HFA II - i* System Checkout Checklist that should be completed on every *HFA II - i* service call. A master copy of the checklist is included in Appendix I. Use that master to run additional copies for completing the checkout on each instrument.

If an error is detected during system checkout, troubleshoot and repair the instrument; then start the system checkout again from the beginning. The entire System Checkout should always be performed from start to finish. Before attempting system checkout, you should be thoroughly familiar with navigating around the service menus.

Note -

1. *Following any calibration procedure that has calibration values stored, proper storage of the new values must be verified by cycling the power off-on before you perform final system checkout. If values obtained by the HFA II - i during calibration are not within an expected range, those values are held only in temporary storage and not permanently stored. When power is turned off, these values are erased and calibration reverts to its old status.*
2. *As part of the system checkout, you are asked to write, read, and delete patient files from the floppy disk and the hard disk. To prevent accidental damage to patient files, it is recommended that you make up a test floppy disk with your own patient data. It is also recommended that you have your own magneto-optical disk, should there be a need to service the magneto-optical drive.*

HFA2 *i* Configuration

One of the steps during system checkout is to read and record the instrument configuration information and hardware levels. Current revision levels of the Model, Serial Number, Operating System, Language, Backplane Version, Motor Board Version, Available Memory, Software Options and Hard Option Number are displayed on the Unit Configuration Screen ("i" screen).

The individual version numbers are displayed on the configuration screen in the formats shown below where **XX** is the revision level.

Model . . . . . **XXX***i*
Serial Number . . . . . **XXX-XXXX**
Operating System . . . . . Rev**XX**
Language . . . . . **XX**
Backplane Version . . . . . **XX**
Motor Board Version . . . . . **XX:XX:XX:XX:XX:XX**
Available Memory . . . . . **XX** MB
Hardware Options . . . . . 00000000 **- XXXXXXXX**
Software Options . . . . . **XXXXXXXX**

You can view/print this information from the Main Menu. Select the ***i*** icon. The configuration data appears on the screen. Select *Print* to print out the configuration data.

The hardware options number corresponds to the model number of the instrument and is stored in the instrument's configuration file on the Hard Drive. If the hardware options number is set as a model 750i, all software features are enabled. If set for a 740i, only those features intended for the 740i are enabled. If set for a 720i, only those features intended for the 720i are enabled.

The hardware options number should be verified during the system checkout procedure. Refer to Appendix G for specific hardware options numbers.

The hardware options number also appears on the System Log printout and the Cal/Wedge printout. You can print this information using the following procedures:

For the System Log!

- From the main menu, select *System Setup*; then select *Print System Log*. The hardware options number and instrument serial number are printed on the line titled *Machine ID*, at the beginning of the printout.

For the Cal/Wedge printout

- From the Calibration main menu, select *Print Cal Values* to print out the instrument calibration data. The hardware options number and instrument serial number are printed on the line titled *Machine ID*, near the beginning of the printout.

HFA II - i SYSTEM CHECKOUT CHECKLIST

Your Name: _____ *HFA II - i* S/N: _____

Date: _____

NOTE: *Following any calibration procedure that has calibration values stored in the Cal/Config Data, storage of the new values must be verified by cycling the power off-on* ***before you perform final system checkout****. If values obtained by the HFA II - i during calibration are not within an expected range, those values are held only in temporary storage and not written to the Cal/Config Data. When power is turned off, these values are erased and calibration reverts to its old status.*

The *HFA II - i* System Checkout Checklist Guidelines —

- **Part I** — The items described in Part I must be completed for ***All*** service calls.
- **Part II** — The items described in Part II must be completed when any of the following service conditions apply:

  -- Performing an instrument PM
  -- Recalibrating either the White/White or Blue/Yellow light intensities
  -- Replacing/initializing the Cal/Config Data
  -- Cleaning/replacing the brightness detector, ND wedges, or the color wheel
  -- Replacing the motor driver PCB

This checklist assumes that all required service has been performed on the *HFA II - i*. Place a checkmark next to each item if okay. If an item does not apply to the *HFA II - i* under service, indicate N/A (not applicable).

Part I -- For All Service Calls (Refer to the above System Checkout Checklist Guidelines.)

___ 1) If a repair has been performed, verify that all required adjustments/checks have been performed per Table 3-1.

___ 2) Acquire and print the results of your foveal test. Check that the foveal value obtained is within ±2 dB of your known foveal value. (4.8.1.1)

___ 3) Print the Cal/Wedge printout. Verify that all values are within specification. (Appendix H)

___ 4) Print the Unit Configuration printout. Verify that all entries are accurate, based on instrument serial number and model. (Appendix J).

___ 5) Print the System Log printout and then clear the log. Verify that all reported error conditions have been evaluated/corrected. (Appendix J)

Part II (Refer to the above System Checkout Checklist Guidelines.)

Calibration Checks —

___ 6) Verify that the white/white light intensities are within the specified tolerances. (Attach the required White Light Verification Data printout to this checklist.)

___ 7) Verify that the blue/yellow light intensities are within the specified tolerances. (Attach the required Blue Yellow Light Verification Data printout to this checklist.)

___ 8) Using the tool stand and fake eye, ensure that the camera is aligned and centered to the trial lens holder.

___ 9) Using the tool stand and fake eye, verify that the gaze tracking box is within tolerance.

___ 10) Using the tool stand and fake eye, ensure that all five IR LEDS are functional. Start a test and initialize gaze tracking. Observe that the three IR LEDs can be seen on the video image of the fake eye when the trial lens holder is in the down position (reflex and bowl IR LEDs) and in the up position (reflex and trial lens holder LEDs).

___ 11) Check that the touch screen response is within tolerance. Verify that patient data can be entered easily and without error.

___ 12) Verify that the CRT image is within specified tolerances.

___ 13) Enter Calibration - Verification - Exerciser Tests. Run the 30/60 mixed tests for 5 minutes. No errors should be reported. While the test is running, verify that there is no shutter noise. Look into the bowl and ensure that there is no shutter streaking.

Operational Checks —

___ 14) Check the CPU battery voltage (in circuit). If the voltage is below 3.0, volts replace the battery and verify the CMOS settings are correct as per Appendix E.

___ 15) Verify that the power table moves up and down and that the table top or slider slides freely in and out. Ensure that the slider is securely fastened to the table top.

___ 16) Check that the external brightness knob moves freely and has additional brightness range.

___ 17) Check that the patient chinrest and headrest move smoothly and completely up/down and left/right. (Noise will be heard at the end of each motor limit.)

___ 18) Observe the bowl for dirt or other cosmetically unacceptable spots. Clean as needed.

___ 19) Check the operation of the rear fan, and clean the filter

___ 20) Check that the date is correct and the time is within 2 minutes.

___ 21) Select a patient test. Change parameters. Verify that the central fixation LED, inner diamond, and outer diamond all function.

___ 22) Turn foveal threshold on (except Model *720i*). Select size III. Start the test. Verify that the size III spot is in the center of the inner fixation diamond. Ensure that the spots are sharply focused and no halo is visible. Test the patient button for operation.

___ 23) Recall a patient test from your test floppy disk. Display and print the test.

___ 24) Recall a test from the hard disk. Display and print the test.

___ 25) Duplicate a patient test from your test floppy disk to a formatted floppy. Display the copied test.

___ 26) Copy a patient test from your test floppy disk to the hard drive. Delete that test from the hard disk.

___ 27) Perform a backup using the Magneto-Optical drive to verify the backup/restore procedure.

___ 28) Turn power off/on and wait for the Main Menu. No errors should be reported.

2.2 Preventive Maintenance Procedure

For U.S. domestic Field Service, an annual preventive maintenance (PM) visit is required for every *HFA II - i* instrument under service contract. The PM visit can be combined with a regular service visit if the timing is suitable. The *HFA II - i* System Checkout Checklist (Section 2.1) details the checks and measurements required to complete a PM.

In addition to the System Checkout, the following points should be checked during a PM or service call.

- Check that all external cable and cord connections are secure.
- Check that the instrument is being powered from a properly grounded AC outlet.
- Observe the ambient conditions in which the instrument is operating:
  - Are the cooling vents on the instrument unobstructed?
  - Are there any ambient conditions present that may cause static generation (carpeted floors, dry winter weather, etc.)?
- Check whether the instrument operator(s) have any questions/comments regarding performance of the instrument.

PM Procedure

1) Obtain the ***Before*** instrument data as prescribed on the Light Intensity worksheets detailed in Section 4.8.1.

2) Apply a ***very thin*** film of clock oil (P/N 02534) to the projection assembly rails. The recommended method is to place one drop of oil on your fingertip and lightly wipe it along the length of the top of the rail. Do this once for each rail.

Caution — Apply the oil sparingly. Excessive oil on the rails will migrate to other assemblies and cause problems.

3) After the oil has been applied, proceed to the Motor Exerciser (Section 5) and exercise the F motor (focus/carriage motor). Exercise the focus motor 20 times to distribute the oil on the rails.

4) Check the rail ends and directly beneath the projection assembly for any excess oil. Carefully wipe up any excess oil.

5) Clean the optics path. Refer to Appendix Q - Cleaning Optics, for general guidelines. Note that cleaning certain elements in the optics path will affect the light intensity readings of the instrument, and thus necessitate recalibration.

6) Clean the top and bottom air intake filters, and the power supply fan:

Bottom Filter — It is recommended that this filter be replaced. However, it can be cleaned under running water, dried, and then reinstalled, if necessary. Ensure that the filter is completely dried before reinstalling.
Top Filter — Do Not clean this filter — replace it only. Refer to Section 2.3 for special replacement procedures required.
Power Supply Fan — Gently brush, vacuum, or blow any accumulated dust and debris off the power supply fan and surrounding assembly. Use care to avoid getting dust or debris on the instrument optics or bowl.
EMI Box Fan — Gently brush, vacuum, or blow any accumulated dust and debris off the EMI Box fan and surrounding assembly. Use care to avoid getting dust or debris on the instrument optics or bowl.
CPU Fan — Open the CPU enclosure and gently brush, vacuum, or blow any accumulated dust and debris off the EMI Box fan and surrounding assembly. Use care to avoid getting dust or debris on the instrument optics or bowl.

7) Clean the bowl (see User's Guide).

8) Check all belts, and replace as required.

9) Update the system software to the latest revision that the customer is entitled to free of charge.

10) With the covers still off, perform the System Checkout (2.1). Form is found in Appendix I.

(This page left intentionally blank)

Section 3 - Parts Removal/Replacement

Notes:

3.1 General Instructions

- Table 3-1 is the single source of reference for Removal/Adjustment requirements. Whenever a removal procedure is performed, refer to Table 3-1 to determine which follow-up checks/adjustments are required.

- System interconnect diagrams for the entire instrument are contained in Section 6.

- In addition to the drawings in this section, the parts drawings in Section 7 provide useful reference for parts identification and identifying relative locations during removal/replacement procedures.

- References from one procedure to another are shown in the form "(x.x)." EXAMPLE: In the CRT Removal/Replacement procedure, one of the steps is to "Remove the operator panel (3.4)." If you need further details for removing the operator panel, you can refer to Section 3.4, and then return to the CRT removal procedure for the next step.

- Simple removals that are clearly obvious are not described in this service guide.

- Unless noted otherwise, the steps for replacement (reassembly) are simply the reverse order of the steps described for removal and are not listed. Replacement (reassembly) notes are included as needed.

- All screws and nuts mentioned in the instructions are metric unless noted otherwise.

- Because the covers interlock with each other, the required sequence for cover removal is:
    1. Front cover
    2. Rear cover
    3. Operator panel

  The covers must be reinstalled in exactly the opposite sequence. Successful reassembly requires careful attention to the interlocking points on the covers.

(continued)

(3.1 General Instructions - continued)

- Some of the motor pulleys are installed with the collar outward, and some with the collar inward (next to the motor body). Be sure to make note of the correct position of the collar before removing the pulley.

- When reinstalling motor pulleys, ensure that there is proper clearance between the pulley and motor body. When reinstalling the belt, ensure that the motor belt teeth are properly meshed with both pulleys.

- The appearance and condition of the bowl's inner surface are critical to the functionality of the *HFA II - i*; work carefully to avoid damaging or dirtying the bowl. Do not touch the inside of the bowl unnecessarily.

- In this service guide, the terms left, right, front and back of the instrument are as viewed from the patient position, unless noted otherwise.

- Whenever you will be working on the projection assembly with it installed in the instrument, place a sheet of paper or clean cloth under the projection assembly to catch any small hardware that you may drop.

- Some of the cable connectors in the instrument may not be keyed. To facilitate later reassembly of the instrument, consider labeling each connector during disassembly.

- Proper cable and wire routing is important. Before disassembly, observe the cable routing and locations of the cable ties; then be sure to route the cables exactly the same during reassembly. Be sure to replace all cable ties removed during disassembly.

- Be sure to reconnect all ground wires disconnected during disassembly. ***Failure to do so can cause the instrument to malfunction.***

- Certain screws on the projection assembly secure critical alignment of the optical path. ***It is essential that you NOT LOOSEN these screws (see Figure 3-1)***. Alignment of the projection assembly can only be done at the factory using special equipment.

- After replacement of parts or an assembly, perform a limited operational check of the associated functions before complete reassembly of the instrument. After complete reassembly, perform the full System Checkout (Section 2).

Caution — It is essential that you use proper ElectroStatic Discharge (ESD) precautions when disassembling or handling the instrument circuitry or circuit boards. Many components in the instrument are highly susceptible to static discharge damage. The Field Service Static Protection Kit, described in Appendix A, must be used for ESD protection during service of the instrument.

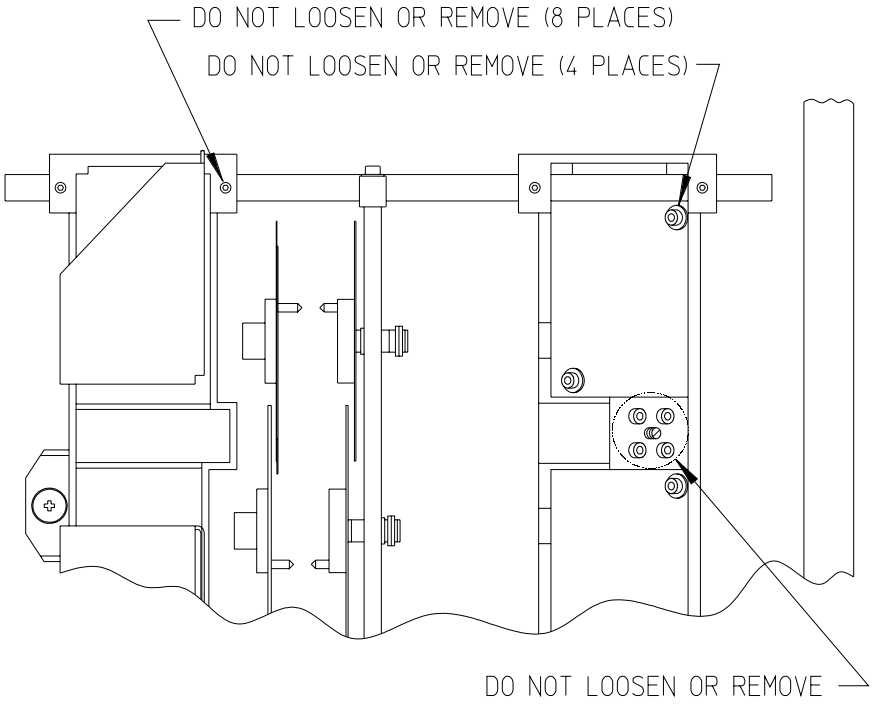

FIGURE 3-1. Screws Securing Projection Assembly Alignment

Special Tools / Equipment

Any special tools or equipment required for a procedure are listed at the beginning of the procedure.

(This page left intentionally blank)

TABLE 3-1

Adjustment / Check Requirements Following Replacements

This table identifies checks/adjustments that must be made following removal/ replacement procedures. The numbers listed under ***Follow-ups Required*** are keyed to the ***Follow-up Actions*** listed on the facing page. For each ***Assembly Replaced***, the **follow-up numbers are listed in the order in which they should be performed**, not necessarily in numerical sequence.

Items marked with an asterisk **(*)** only need to be performed if the assembly is actually being replaced, not just removed and reinstalled. All other items need to be performed whether the assembly is replaced, or simply removed and reinstalled. Superscript numbers [(1)] in the table refer to the ***Notes*** on the facing page.

Assembly Replaced	Follow-ups Required
• Projection Lamp[1]	3, 8, 10, 9, 19, 21, 22, 23,40
• Front Cover Assy	40
• Rear Cover Assy	40
• Operator Panel Assy	40
• Drive Housing Assy	40
• CPU PCB	27, 40, 41
• Hard Drive [2]	26, 27, 28, 29, 7, 8, 3, 10, 9, 12, 11, 13, 16, 17, 15, 18, 19, 20, 21, 22, 23, 40
• Backplane	7, 40
• Flash Prom MDB	29, 40
• Motor Driver PCB	29, 18, 19, 20, 21, 22, 23, 16, 17, 40
• Power Supply	40
• CRT PCB/battery	2*, 7*, 40
• Touch Screen	7, 40
• Fixation Interconnect PCB	5, 16, 17, 15, 11, 13, 40
• CCD Camera	14, 5, 16, 17, 40
• Central Fixation LED Assy	14, 5, 16, 17, 40
• Projection Assy	8*, 3*, 10*, 9*, 12*, 11, 13, 19*, 21*, 22*, 23*,40
• Projection Interconnect PCB	40
• Film Wedge/Motor	8, 22*, 23*, 40
• Glass Wedge/Motor	8, 22*, 23*, 40
• Color Wheel / Aperture Wheel	10, 9, 11, 13, 19*, 21*[3], 40
• Carriage (Focus) Motor	24, 12, 11, 13, 40
• Shutter	8, 40
• Shutter Motor	8, 11, 13, 40

Assembly Replaced	Follow-ups Required
• Carriage (Focus) Motor Belt	24, 40
• Horizontal (X-axis) Turret Motor	24, 11, 13, 40
• Horizontal (X-axis) Turret Motor Belt	24, 11, 13, 40
• Vertical (Y-axis) Turret Belt/Motor	24, 11, 13, 40
• Brightness Detector (PCB) Green Filter Blue Filter	4, 11, 13, 18*, 19*, 20*, 21*, 22*, 23*, 40
• Lower Turret	24, 11, 13, 40
• Turret Cable Assy	11, 13, 40
• Chinrest/Headrest Switch Assy	40
• Chinrest Y-axis Belt/Motor	24, 40
• Patient Support Horizontal (X-axis) Belt/Motor	24, 40
• Chinrest Vertical Slide and Lead Screw	24, 40
• Chinrest Horizontal Slide	24, 40
• Trial Lens Holder Assy	5, 16, 17, 15, 40
• Top Fan	40
• Bowl IR LED Assy	6, 15, 40
• Blue-Yellow Module / Bowl Plug	11, 13, 20*, 40
• Bowl	11, 13, 5, 6*, 16, 17, 15*, 18*, 19*, 20*, 21*,22*, 23*, 40
• Reflex Gaze LED	5, 16, 17, 15, 11, 13, 40
• Bowl Lamp Assy	18, 11[4], 13[4], 40
• IR Bowl Plug	40

Follow-up Actions

1 - Obtain *Before* and *After* Light Intensity and Calibration Values (4.8.1)
2 - CRT Adjustments (4.9.5)
3 - Lamp Filament Position Adjustment (4.8.2.1)
4 - Detector Position Adjustment (4.8.2.8)
5 - Trial Lens Holder Alignment (4.9.6)
6 - Bowl IR LED / Cold Mirror Adjustment (4.9.8)
7 - Touch Screen Calibration (4.9.4)
8 - Shutter Calibration (4.8.2.2)
9 - Aperture I - V Calibration (4.8.2.3)
10 - Color Wheel Calibration (4.8.2.4)
11 - Left/Right Home Position Calibration (4.8.2.5)
12 - Focus Calibration (4.8.2.7)
13 - Offset Fixation Calibration (4.8.2.6)
14 - Camera Focus (4.9.7)
15 - Camera Intensity Calibration (4.8.6.3)
16 - Camera Position/Size Calibration (4.8.6.1)
17 - Gaze Monitor Position/Size Calibration (4.8.6.2)
18 - White Bowl Intensity Calibration (4.8.3.2.1)
19 - White Projector Intensity Calibration (4.8.3.1.1)
20 - Yellow Bowl Intensity Calibration (4.8.3.2.2)
21 - Blue Projector Intensity Calibration (4.8.3.1.2)
22 - Wedge Calibration (4.8.3.3)
23 - Blue Correction (4.8.3.4)
24 - Belt Tension Adjustment (4.9.2)
25 - Patient Support Horizontal Leadscrew Adj. (4.9.1)
26 - Transfer Calibration Constants (App. G.1)
27 - ID CPU (App. G.2)
28 - Configure Hardware (App. G.3)
29 - Reload Software (App.M)
40 - System Checkout (2.1)
41 - Verify CMOS settings (App. E)

NOTES -

1. *Adjustment/calibration not required when projection lamp is replaced by customer.*
2. *Only if the Calibration constants diskette is not restorable.*
3. *Only blue calibration required if color wheel is replaced. Both white and blue projector calibration required if aperture wheel is replaced.*
4. *For Bowl Lamp Replacement, actions 11 and 13 are required only if projection assy had to be removed for replacement of bowl lamp(s) equipped with early style baffles.*

3.1.1 Removal of the *HFA II - i* from the Power Table

A number of parts removal and assemblies will require that the *HFA II - i* instrument be removed from the power table top prior to accomplishing further removals and assemblies.

1) Remove the patient switch jack from the patient switch connector, located on the bottom left of the disk drive panel.

2) Lower the power table to its lowest position.

3) Remove the three screws that secure the cover plate to the rear of the slider assembly.

4) Remove the cover plate.

5) Pull the slider handle out and position the slider assembly such that the hole in line with the rail on the left side of the slider (as seen from the front of the *HFA II - i*) aligns with the hole in the left rear *HFA II - i* foot.

6) Loosen and remove the screw (B) securing the left rear foot of the *HFA II - i*.

7) Position the *HFA II - i* such that the front end of the slider is just beyond an inch (2.54 cm) from the edge of the table top. Do not move the slider assembly beyond this position.

8) Loosen but do not fully remove the captive screw (A) securing the front right foot of the *HFA II - i*. Access to the screw is from the hole on the bottom of the slider assembly.

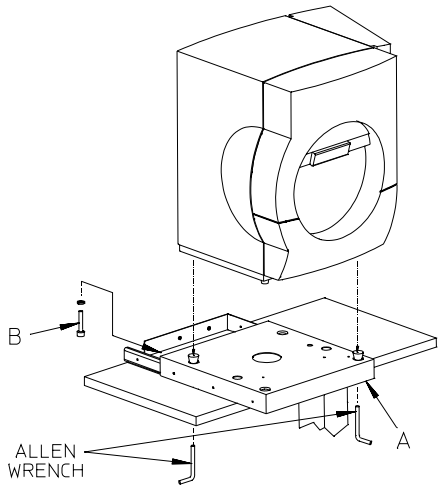

Removal From Slider

3.2 Front Cover Assembly Removal

NOTE - *As described below, the front cover assembly must first be partially removed to allow an internal cable and ground wire to be disconnected (step 3) before the cover can be removed completely.*

1) Loosen the two captive 1/4-turn fasteners located along the bottom front of the front cover assembly.

2) Pull the bottom of the front cover assembly out slightly; then gradually lift up on the front cover assembly while pulling out from the top. This will free the front cover assembly from the rest of the instrument.

3) While holding onto the front cover assembly, disconnect the ribbon cable from the Patient Support Interconnect PCB and disconnect the ground wire from the chassis.

4) Remove the front cover assembly from the instrument.

Replacement Notes:

- Do not over tighten the 1/4-turn fasteners.

- Be sure to reconnect the ground wire to the chassis and the ribbon cable to the Patient Support Interconnect PCB before attaching the front cover assembly. Guide the cover on carefully to avoid pinching the ground wire or the forehead rest drive belt between cover and chassis.

Follow-up Checks/Adjustments:

See Table 3-1.

3.3 Rear Cover Assembly Removal

1) Remove the front cover assembly (3.2).

2) Remove the projection lamp access cover.

3) Remove the fan filter door completely (to avoid interference during rear cover removal.)

4) Remove the cables and cords from connector on the back panel.

5) Remove the two screws located near the top of the rear cover assembly.

6) Remove the two screws that were exposed by removing the fan filter door.

7) Remove the four screws located along the bottom and side of the rear cover assembly.

Caution — While the cover assembly is being manipulated in the next step, be very careful to avoid damaging the neutral density wedges which are located very close to the top of the cover. The projection lamp cable and the heatsink on the CRT PCB also are very close to the cover.

8) Pull the rear cover assembly part way out, disconnect the fan connector, and then remove the rear cover assembly.

Replacement Notes:

- Remember to reconnect the fan before reinstalling the rear cover.
- Work carefully to avoid damaging the projection assembly by contact with the cover assembly.
- Be careful of the routing of various cables to prevent them from being damaged by being pinched between the rear cover assembly and the frame.
- After the unit is reassembled and power is applied, check that the fan is operating.
- Ensure that the brightness potentiometer moves freely.

Follow-up Checks/Adjustments:

See Table 3-1.

3.4 Operator Panel Assembly Removal

1) Remove the front cover assembly (3.2).

2) Remove the rear cover assembly (3.3).

3) Remove the patient button assembly from the disk drives panel .

4) Remove the drive housing assembly (3.5).

5) Remove the three screws that secure the CRT bracket clamp.

6) Disconnect:

   - the large edge connector on the CRT PCB;
   - the brightness control potentiometer connector;
   - the chinrest switch flex-cable connector from the Motor Driver PCB
   - remove the CPU enclosure lid and then disconnect the touch screen ribbon cable from connector JTS on the Backplane PCB.

7) Remove the disk/tape drive ribbon cables from their clip(s) on the inside of the operator panel assembly.

8) Remove the two screws located at the two bottom corners on the backside of the operator panel assembly (Figure 3-2). These two screws secure the bottom of the operator panel to the instrument chassis.

9) Loosen the two captive screws, behind the top of the CRT, which are securing the CRT PCB support bracket to the instrument chassis. (Hold onto the operator panel assembly as you loosen the screws, to prevent it from falling.)

10) Remove the operator panel assembly by manipulating it up slightly and to the left while pulling straight out.

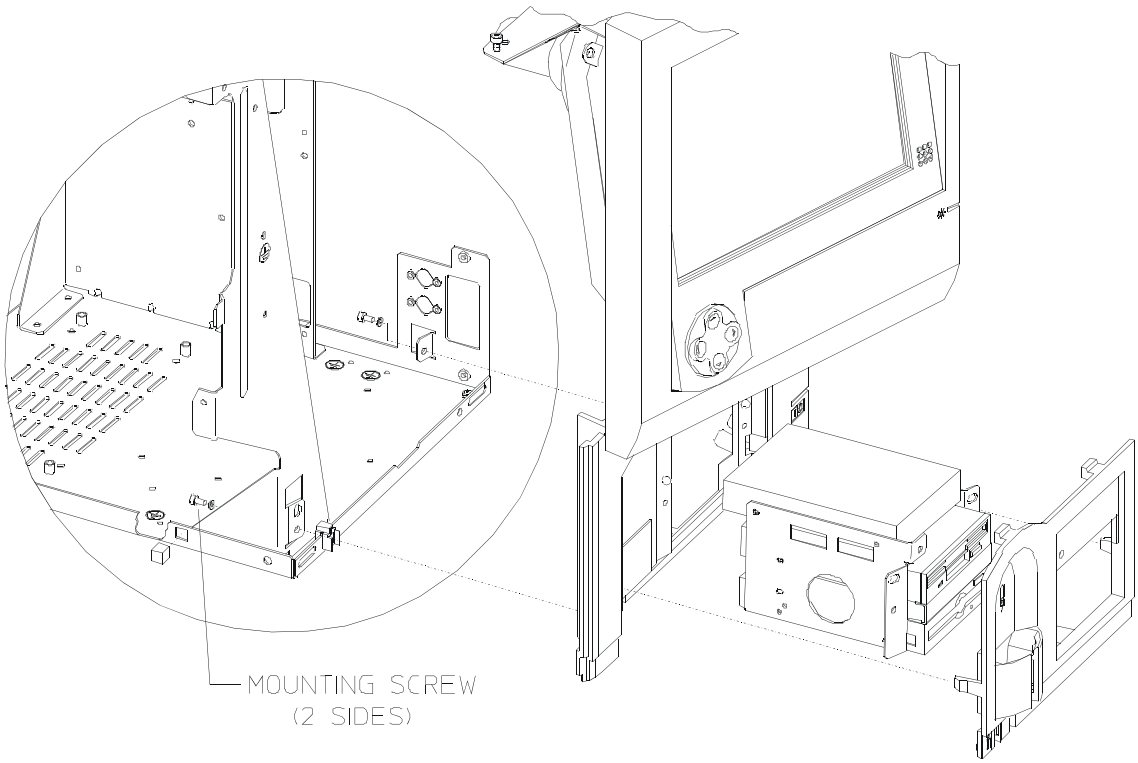

FIGURE 3-2. Operator Panel Bottom Mounting Screws

Replacement Notes:

- Be sure to slide the ribbon cables back into their clips.
- Make sure that the patient response button connector module is mounted in the bottom pan, ***with its contacts positioned upward***, before you reinstall the operator panel assembly.

Follow-up Checks/Adjustments:

See Table 3-1.

3.5 Drive Housing Assembly Removal

1) Remove the patient switch jack from the patient switch connector located on the bottom left of the disk drive panel.

2) Lower the power table to its lowest position.

3) Perform step 3) or step 4) as required.

   a) Using both hands, place your fingers along the bottom edge of the drive housing front panel.

   b) Attempt to pull both outward and upward to remove the panel. If the panel can be removed in this manner, proceed to step 5) below.

4) Remove the front panel from around the drive housing assembly in the following manner:

Caution — This step must be performed ***carefully*** to avoid possible damage to the circuit board on the bottom drive.

   a) From below the instrument, insert a small diameter tool (such as a hex ball driver — preferably with handle) ***straight up*** through the small hole located in the bottom of the instrument, approximately 1.75" back from the front edge of the bezel (Figure 3-3). Insert the tool until it touches the plastic tab securing the bottom edge of the bezel.

Caution — If the tool is inserted with the tip tilted rearward, it may contact and damage the bottom drive circuit board.

   To unlatch the bezel, push the tip of the tool against the latch as you move the handle of the tool rearward (Figure 3-3).

   b) Pull out on the bottom edge of the drive bezel until it separates from the operator panel.

5) Remove the three screws (two at the top, one at the bottom) that hold the drive housing assembly in place.

6) Pull the drive housing assembly straight out until the cable connections at the back are accessible.

7) Disconnect the cables and power connectors from the drives.

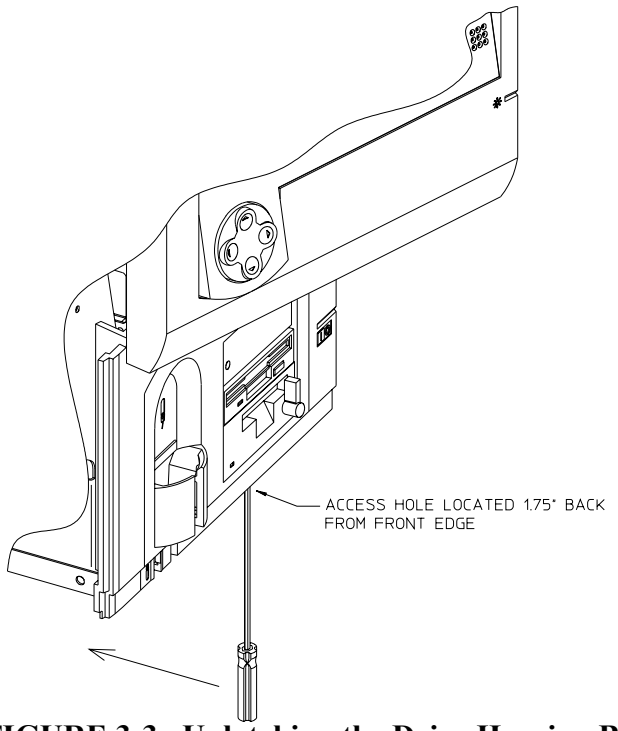

FIGURE 3-3. Unlatching the Drive Housing Bezel

Replacement Notes:

- Before installing a new drive, verify that it is strapped correctly (Refer to Field Service Bulletin FA2i-003(x)).
- Reconnect the cables to the drives before reinstalling the drive housing assembly.
- Replacement hard disks are preformatted. You will need to load the application software, and restore configuration and calibration data. If the calibration backup diskette is not available, a complete system calibration is required. Patient data will need to be restored, preferably by the customer.
- If it becomes necessary to reformat a hard drive, refer to Appendix L for instructions.

Follow-up Checks/Adjustments:

See Table 3-1.

3.6 CPU/Backplane Enclosure Removal

1) Disconnect the printer, COM1, COM2, keyboard, mouse, external VGA, ethernet and USB connections from the connectors located on the outside of the CPU/Backplane Enclosure right side.

2) Remove the three M3 screws and washers that secure the top left bracket to CPU/Backplane Enclosure and to the chassis.

3) Remove the four M3 screws and washers from the enclosure lid.

4) Remove touch screen cable connector and patient switch cable connector from the left side of the Backplane board.

5) Remove the drive lamp LED connector from the bottom of the J12 connector on the CPU board. Note that the two wires connect to the bottom two pins of the connector.

6) Slip the touch screen and patient switch cables from the wire clamp on the left inside wall of the CPU/Backplane Enclosure.

7) Slightly compress and remove the snap bushing from the top left corner of the CPU/Backplane Enclosure.

8) Slide the touch screen and patient switch cables out of the CPU/Backplane Enclosure through the slot.

9) Remove the CRT and POWER connectors from the backplane board.

10) Remove the JXVID and JMPS connectors from the backplane board.

11) Remove the two M3 screws and cable clamp that secure the IDE, Floppy and video cables to the top of the CPU/Backplane Enclosure.

12) Remove the inner front screw of the top fan assembly and the Ferrite clamp screw that secure the ferrite clamp to the top of the CPU/Backplane Enclosure.

13) Remove the Floppy drive and IDE cable connectors from the top ride side of the CPU board.

14) Remove the ferrite clamp and attached cables from the CPU/Backplane Enclosure

15) Loosen and release the captive screw on the left side of the bottom CPU/Backplane Enclosure bracket.

16) Loosen the captive screws on the right side of the bottom bracket.

17) Loosen the M3 screw that secures the right side bracket to the CPU/Backplane Enclosure.

18) Loosen and disconnect the 1/4 turn fastener from the retainer at the top of the CPU/Backplane Enclosure.

19) Disconnect the brightness pot cable from the brightness pot assembly.

20) Swing the CPU/Backplane Enclosure out from the chassis just enough to allow access to the wire saddles on the back of the CPU/Backplane Enclosure.

21) Remove the brightness pot cable from the wire saddle located on the back side of the CPU/Backplane Enclosure.

22) Remove the patient switch cable from the two wire saddles on the back of the CPU/Backplane Enclosure and place the cables free of the CPU/Backplane Enclosure.

23) While supporting the weight of the CPU/Backplane Enclosure, loosen and remove the right side captive screw on the bottom bracket.

Follow-up Checks/Adjustments:

See Table 3-1.

3.7 CPU and Backplane Removal

1) Remove the front cover assembly (3.2).

2) Remove the rear cover assembly (3.3)

3) Remove the CPU/Backplane Enclosure from the Chassis (3.6).

4) Remove the three M3 screws that secure the external CPU PCB clamp to the outside of the CPU/Backplane Enclosure.

5) Remove the external CPU PCB clamp from the CPU/Backplane Enclosure.

6) Disconnect the two serial port connections from the J9 and J10 connectors on the CPU PCB.

7) Disconnect the parallel port connection from the J7 connector on the CPU PCB.

8) Disconnect the USB cable connector from the J16 connector of the CPU PCB.

9) Remove the two M3 internal CPU PCB clamp screws.

10) Remove the clamp up through the top corner hole of the CPU/Backplane Enclosure.

11) Remove the five M3 screws that secure the Backplane board to the bottom of the CPU/Backplane Enclosure.

12) Remove the upper fan connector.

13) Remove the CPU PCB and Backplane board as a unit from the CPU/Backplane Enclosure.

Follow-up Checks/Adjustments:

See Table 3-1.

3.8 Motor Driver PCB Removal

1) Remove the front cover assembly (3.2).

2) Remove the rear cover assembly (3.3).

3) Disconnect the camera cable connector from the P14 connector located in the lower left side of the Motor Driver Board (MDB).

4) Disconnect the chinrest motor cable connector from the P5 connector located at the upper left corner of the MDB.

5) Disconnect the Projection Interconnect cables from the P1 and P2 connectors located at the top of the MDB.

6) Disconnect the projection lamp cable and the yellow lamp cable connectors from the P3 and P4 connectors located on the top right side of the MDB.

7) Disconnect the Fixation Interface Board cable connector at the P7 connector located in the top right corner of the MDB.

8) Disconnect the Chinrest Interface Board cable connector at the P10 connector located on the top right side of the MDB.

9) Disconnect the JXVID ribbon cable connector at the P13 connector located in the lower right side of the MDB.

10) Remove the three screws and right side bracket that secures the CPU/Backplane Enclosure to the chassis.

11) Disconnect the DC Distribution cable from the bottom of the backside of the MDB.

12) Remove the six screws securing the Motor Driver PCB to the chassis.

13) Slide the MDB to the right and disconnect the JMPS ribbon cable connector at the P15 connector located in the bottom of the middle of the MDB.

14) Remove the Motor Driver PCB.

Replacement Notes:

- Reconnect the cable to the back of the Motor Driver PCB before reinstalling the PCB.

Follow-up Checks/Adjustments:

See Table 3-1.

3.9 Separation of the CPU from the Backplane

NOTE - *Improper attempts at separation of the Backplane board and Processor board can result in irrepairable damage to the backplane board or processor board.*

1) Place the index finger of your left hand on the E9 mounting hole located along side the PCI connector of the Backplane Board.

2) Place the thumb of your left hand on the E10 mounting hole located along side the EISA connector of the Backplane Board.

3) Grasp the CPU PCB board by the edge bracket with your right hand.

4) Pull straight up on the CPU PCB with you right hand while holding the backplane board flat with your left hand until the CPU PCB pops out of the PCI and EISA sockets.

Follow-up Checks/Adjustments:

See Table 3-1.

3.10 Power Supply Removal

NOTE - *The power supply used on the HFA II - i is different from that of the HFA II. Do not remove the keys found in the power supply output cables. Do not attempt to use the HFA II power supply.*

1) Lower the power table to its lowest position and lock the table top in its center position.

2) Remove the front cover assembly (3.2).

3) Remove the rear cover assembly (3.3).

4) Ensure that the power cord is disconnected.

5) Disconnect the two large connectors from the power supply.

6) Remove the two screws securing the power supply assembly.

7) Lift the power supply and carefully maneuver the power supply out of the side opening in the chassis. (Watch out for the Fixation Interconnect PCB mounted on the bowl.)

8) With a screwdriver, unfasten the two AC supply lines and ground wire attached to the power supply.

9) Remove the power supply.

Replacement Notes:

- Reconnect the three input wires before reinstalling the power supply assembly.

Follow-up Checks/Adjustments:

See Table 3-1.

3.11 CRT PCB Removal

1) Remove the operator panel assembly (3.4).

2) Carefully discharge the CRT high voltage to ground and disconnect the high voltage lead from the CRT.

3) Disconnect:

   - the yoke connector from the CRT PCB.

   - the connector on the end of the CRT neck.

4) Release and remove the CRT PCB from its four plastic standoffs.

Replacement Notes:

- The CRT anode lead must be routed over the top of the CRT neck. If the lead passes under the neck of the CRT, it lays next to the bowl and the electrostatic field around the lead will attract dust to the inside of the bowl.

Follow-up Checks/Adjustments:

See Table 3-1.

3.12 CRT Removal

1) Remove the operator panel (3.4).

2) Carefully discharge the CRT high voltage to ground and disconnect the high voltage lead from the CRT.

3) Disconnect:

   - the yoke connector from the CRT PCB.

   - the connector at the end of the CRT neck.

4) Remove the screw (item 1, Figure 3-4) at each corner of the CRT bracket.

5) Remove the CRT assembly from the operator panel.

6) Remove the four screws (item 2, Figure 3-4) securing the CRT to the bracket. Be careful not to lose the washers, and make note of how many washers are used on each screw. (The washers adjust the mounted position of the CRT.)

Replacement Notes:

- Anytime the CRT or touch screen is disassembled from the foam gaskets, the CRT and touch screen viewing surfaces should be carefully cleaned before reassembly.

- Ensure that the foam gaskets for the CRT and touch screen are sealing properly, with no gaps between them.

- Tighten the CRT mounting screws enough to compress the foam gaskets slightly for a good seal but DO NOT OVERTIGHTEN. If the gaskets are overcompressed, the touch screen surface will be pressed against the operator panel bezel and the instrument will malfunction.
  Check for adequate clearance by sliding the edge of a business card between the touch screen surface and the edge of the bezel along the entire perimeter of the bezel. If necessary, loosen the two top CRT mounting screws slightly to obtain adequate clearance.

- Be sure that all of the washers (spacers) are in place on the mounting screws before securing the CRT to the bracket.

- The CRT must be mounted with its anode connector downward, and the CRT anode lead routed over the top of the CRT neck. If the lead passes under the neck of the CRT, it lays next to the bowl and the electrostatic field around the lead will attract dust to the inside of the bowl.

- The connector at the end of the CRT neck is not keyed, be careful to position it correctly. The key-notch in the connector should be located in the gap between pins 1 and 7 on the tube.

Follow-up Checks/Adjustments:

See Table 3-1.

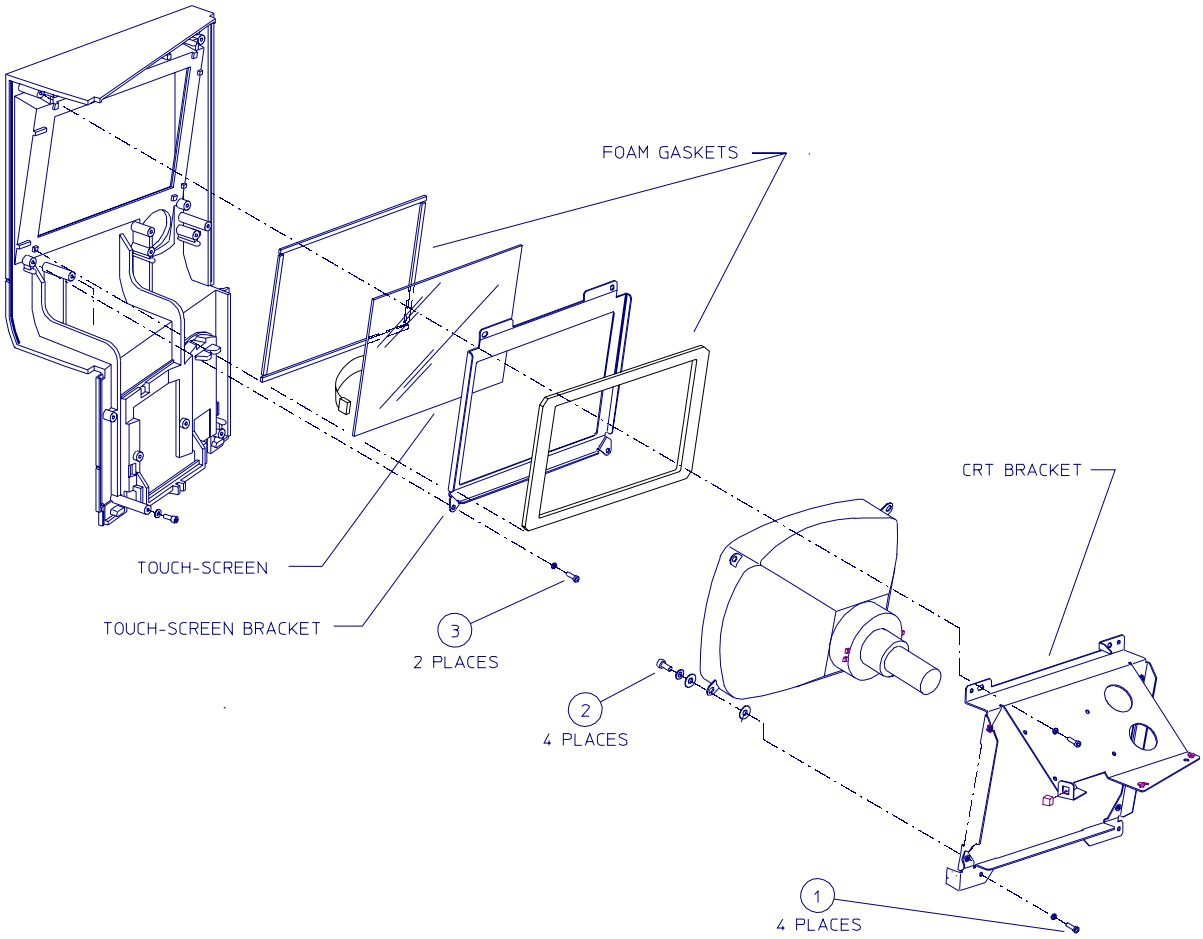

FIGURE 3-4. CRT / Touch Screen Removal

3.13 Touch Screen Removal

1) Remove the operator panel (3.4).

2) Carefully discharge the CRT high voltage to ground.

3) Remove the screw (item 1, Figure 3-4) at each corner of the CRT bracket.

4) Remove the CRT assembly from the operator panel.

5) Remove the two screws (item 3, Figure 3-4) holding the touch screen bracket and remove the bracket.

6) Remove the touch screen.

Replacement Notes:

- Anytime the CRT or touch screen is disassembled from the foam gaskets, the CRT and touch screen viewing surfaces should be carefully cleaned before reassembly.
- Make sure that the touch surface is facing outward when mounting the touch screen. (The touch surface is a thin film laminated to one side of a glass plate. This is easily observed by looking at the point where the flex cable exits the touch screen.)
- Ensure that the foam gaskets for the CRT and touch screen are sealing properly, with no gaps.
- The CRT anode lead must be routed over the top of the CRT neck. If the lead passes under the neck, it lays next to the bowl and the electrostatic field around the lead will attract dust to the inside of the bowl.

Follow-up Checks/Adjustments:

See Table 3-1.

3.14 CCD Camera Removal

1) Remove the front cover assembly (3.2).

2) Remove the rear cover assembly (3.3).

3) Remove the camera cable from the P14 connector of the motor driver board.

4) Loosen the two captive screws securing the camera to the Camera Mount.

5) Make note of the lens setting, for reference during reassembly.

6) Remove the camera from the Camera Mount.

Replacement Notes:

- Before installing the camera, adjust the lens to the setting noted during camera removal, but DO NOT secure the lens in position yet with RTV. (If the original setting was not noted, or if a new camera is being installed, set the mark on the lens to align with number 2.) When the *HFA II - i* has been reassembled to the point where it can be operated, check/adjust and secure the camera focus as described in 4.9.7, Camera Focus.

Follow-up Checks/Adjustments:

See Table 3-1.

3.15 Fixation Interconnect PCB Removal

1) Remove the front cover assembly (3.2).

2) Remove the rear cover assembly (3.3).

3) Remove the camera assembly (3.14).

4) Remove the bowl lamp connectors from P1 and P2 of the fixation interconnect PCB.

5) Remove the IR LED connectors from P3 and P4 of the fixation interconnect PCB.

6) Remove the ribbon cable from P5 connector of the fixation interconnect PCB.

7) Press the tabs outward on each side of the PCB to release it from the Camera Mount.

8) Remove the Central Fixation LED from the Camera Mount by gently pressing down on the holding tab with a small allen wrench, while pulling out the LED by the cable.

9) Loosen the M4 screw at the top of the Camera Mount and remove the two M4 screws at the bottom. If the bowl is still in the instrument, the camera will need to be removed to access the top screw.

10) Maneuver the Reflex LED holder through the opening in the Camera Mount. If you are replacing the Fixation PCB, you must cut the tie-wrap and remove the Reflex LED from the Reflex LED holder.

Replacement Notes:

1) When re-inserting the Central Fixation LED, you must line up the notch on the LED with the flat portion of the holder. You will hear a click when the LED moves into position.

2) The Reflex LED holder will be re-used with the new Fixation PCB. Make sure that you tie-wrap the new Reflex LED to the Reflex LED holder.

Follow-up Checks/Adjustments:

See Table 3-1.

3.16 Central Fixation LED/Beamsplitter Removal

1) Remove the CCD camera (3.14).

2) Remove the Central Fixation LED from the Camera Mount by gently pressing down on the holding tab with a small allen wrench, while pulling out the LED by the cable.

3) Press a small screw driver against the flat side of the beamsplitter clip and lift the clip upwards.

4) Remove the beamsplitter from the mount. When working with the beamsplitter, make sure that you do not get fingerprints on its surfaces.

Replacement Notes:

- To secure the beamsplitter in place, place the hooks, on the open side of the beamsplitter clip, in the slots and press down on the flat side of the clip

- When re-inserting the Central Fixation LED, you must line up the notch on the LED with the flat portion of the holder. You will hear a click when the LED moves into position.

- Refer also to the camera replacement notes in Section 3.12.

Follow-up Checks/Adjustments:

See Table 3-1.

3.17 Projection Assembly Removal

Caution — The aperture wheel and ND wedges on the projection assembly are delicate and easily damaged — ***work carefully!*** Any fingerprints or contamination on the optical area of the film wedge may necessitate replacement of the wedge; it cannot be cleaned, other than to blow off any dust.

1) Remove the front and rear covers (3.2, 3.3)

2) Loosen the screw holding the finger guard/baffle plate just behind the film wedge (Figure 3-5). Easiest access to the screw is through the hole in the film wedge.

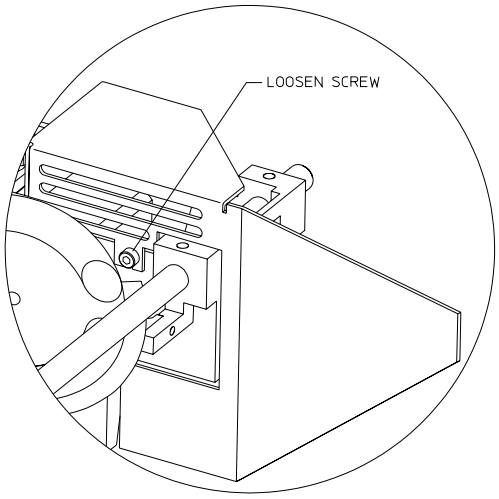

FIGURE 3-5. Removing the Finger Guard/Baffle Plate

3) Disconnect the cable from the projection lamp.

4) Disconnect the two ribbon cables from the Projector Interconnect PCB.

5) Loosen the chassis-mounted, quarter-turn fastener that secures the projection assembly at its end closest to the CPU PCB.

6) Remove the two screws located at the top front of the bowl assembly.

7) Rotate the turret assembly to position the turret Y-motor towards the front.

8) Move the aperture wheel/color wheel carriage all the way forward, towards the first projection mirror.

NOTE - Before lifting the projection assembly out of the instrument, ensure that your projection mount tool is set up to match the diameter of the carriage rails (3/8") on the projection assembly..

9) Lift the projection assembly up and out as you maneuver the turret through the hole in the bowl assembly.

10) Install the projection assembly on the projection mount tool.

Replacement Notes:

Check/clean the optics as necessary before reinstalling the projection assembly.

Follow-up Checks/Adjustments:

See Table 3-1.

3.18 Projection Interconnect PCB Removal

1) Remove the front and rear covers (3.2, 3.3).

2) Disconnect all cables connected to the Projection Interconnect PCB.

3) Remove the finger shaft guard (two screws), which mounts to two standoffs on the Projection Interconnect PCB.

4) Remove the two screws and two standoffs securing the Projection Interconnect PCB, and remove the board.

Replacement Notes:

- When reinstalling the PCB, loosely install the two PCB mounting screws and leave off the two standoffs temporarily. Position the PCB for proper clearance between the flag and edge detector on the bottom side of the Projection Interconnect PCB then tighten the screws and install the standoffs.

Follow-up Checks/Adjustments:

See Table 3-1.

3.19 Film Wedge/Motor Removal

Caution — The aperture wheel and ND wedges on the projection assembly are delicate and easily damaged — ***work carefully!*** Any fingerprints or contamination on the optical area of the film wedge may necessitate replacement of the wedge; it cannot be cleaned, other than to blow off any dust.

1) Remove the front and rear covers (3.2, 3.3).

2) Remove the screw securing the bracket that covers the film wedge motor.

3) Remove the two screws securing the film wedge to the film wedge motor shaft, and remove the wedge.

4) Disconnect the "Right" (P4) cable from the Projector Interconnect PCB.

5) Remove the four screws securing the film wedge motor to the projection assembly.

NOTE - *If washers between the motor and the frame are present they must be reinstalled.*

6) Remove the film wedge motor.

Replacement Notes:

- After installing the film wedge on the motor shaft, rotate the wedge and check for proper clearance of the wedge in the film wedge edge detector.

Follow-up Checks/Adjustments:

See Table 3-1.

3.20 Glass Wedge/Motor Removal

1) Remove the front and rear covers (3.2, 3.3).

2) Remove the two screws and standoffs that mount the finger guard bracket to the Projector Interconnect PCB.

3) Disconnect all cables from the Projector Interconnect PCB.

4) Remove the two remaining screws securing the Projector Interconnect PCB and remove the board.

5) Remove the projection lamp assembly.

6) Remove the film wedge.

7) Remove the screw holding the edge detector for the glass wedge. Push the edge detector down and away from the glass wedge.

8) Loosen the two setscrews holding the glass wedge to the motor shaft, and remove the wedge.

9) Remove the four screws securing the glass wedge motor, and remove the motor.

NOTE - *If washers between the motor and the frame are present they must be reinstalled.*

Replacement Notes:

- Route the cable from the glass wedge motor away from the carriage drive pulley under the Projector PCB to avoid possible contact with the pulley.

Follow-up Checks/Adjustments:

See Table 3-1.

3.21 Color Wheel / Aperture Wheel Removal

NOTE - *The aperture wheel can be removed only after the color wheel is removed.*

1) Remove the front and rear covers (3.2, 3.3).

2) Disconnect the two large ribbon cable connectors from the Projection Interconnect PCB.

3) Remove the two socket head screws holding the carriage assembly to the carriage rail block (Figure 3-6). Carefully remove the carriage and place it on a padded work surface that will support the color wheel/aperture wheel without damage to the wheels.

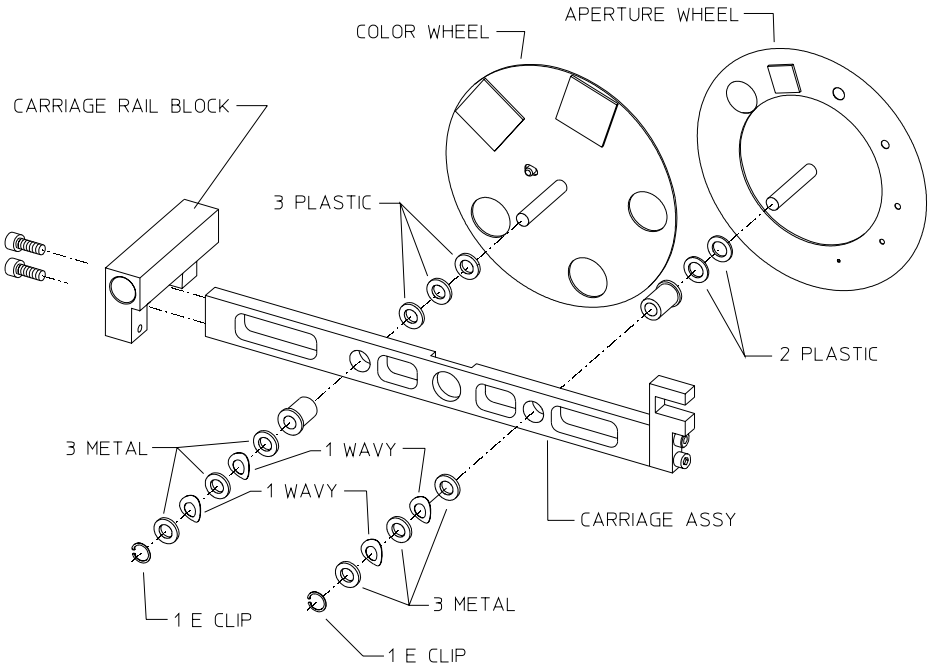

FIGURE 3-6. Color Wheel/Aperture Wheel Removal

Caution — In the next steps, several wavy washers and flat washers will be released. Note their relative positions so that you will be able to reinstall them in the same order as removed.

4) Remove the retaining ring (E-clip) securing the shaft of the color wheel to the carriage. Carefully remove the washers, and remove the color wheel.

Aperture Wheel removal:

5) Remove the retaining ring (E-clip) securing the shaft of the aperture wheel to the carriage. Carefully remove the washers, and remove the aperture wheel.

Replacement Notes:

Ensure that the washers are reinstalled on the shaft(s) in the same order as removed (Figure 3-6).

Follow-up Checks/Adjustments:

See Table 3-1.

3.22 Carriage Motor Removal

1) Remove the Projection Interconnect PCB (3.18).

2) ***Loosen*** the four screws securing the carriage motor to the projection assembly.

3) Remove the projection assembly, using all necessary precautions (3.17).

4) Cut any cable ties securing the carriage motor cable.

5) Remove the four loosened screws holding the motor in place, and remove the motor.

6) Loosen the two setscrews on the carriage motor pulley, and remove the pulley from the shaft.

Replacement Notes:

- The replacement cable tie(s) for the motor cable must be installed before reinstalling the projection assembly in the instrument.
- Adjust the belt tension (Section 4).

Follow-up Checks/Adjustments:

See Table 3-1.

3.23 Shutter Removal

Caution — Handle the shutter carefully! It is delicate and easily deformed or damaged.

1) Switch ON the *HFA II - i*. Proceed to the shutter calibration menu. Select OPEN shutter. Do not make any other selections.
2) Remove the front and rear covers (3.2, 3.3).
3) Loosen the two setscrews holding the ND film wedge to its shaft, and remove the wedge. (Use care to not bend the film wedge and to not get fingerprints or marks on the film surface.)
4) Observe the current position of the shutter. The shutter should later be installed at the same position — ***this is very important!***
5) Loosen the setscrew that secures the shutter to the motor shaft. Gently angle the shutter, and remove it from the shaft.

Replacement Notes:

- Position the shutter for adequate clearance between the glass wedge and the projection casting. Gently bend the shutter, if necessary.
- Put the shutter in the same position you observed during removal, before securing it to the motor shaft.

Follow-up Checks/Adjustments:

See Table 3-1.

3.24 Shutter Motor Removal

1) Remove the projection assembly and install it on the projection mount tool (3.17).

2) Disconnect the shutter cable (P6) from the Projector Interconnect PCB (cut the cable ties if necessary).

3) Remove the two screws securing the shutter motor to the projection assembly, and remove the motor.

4) Loosen the setscrew securing the hub and shutter to the motor shaft, and remove them from the shaft.

Replacement Notes:

- Position the shutter for adequate clearance between the glass wedge and the projection casting. Gently bend the shutter, if necessary.

Follow-up Checks/Adjustments:

See Table 3-1.

3.25 Carriage Motor Belt Removal

1) ***Loosen*** the four screws securing the carriage motor to the projection assembly.

2) Remove the two small screws securing the belt plate against the belt.

3) Remove the belt.

Replacement Notes:

Adjust the belt tension (Section 4).

Follow-up Checks/Adjustments:

See Table 3-1.

3.26 Horizontal (X-axis) Turret Motor Removal

1) Remove the front and rear covers (3.2, 3.3).

2) Disconnect the "X-Axis" 6-pin connector (P10) from the Projection Interconnect PCB.

3) Remove the projection assembly and install it on the projection mount tool (3.17).

4) Remove the four screws securing the X-axis turret motor to the projection assembly.

5) Remove the belt from the motor pulley; then remove the motor.

6) Loosen the two setscrews on the hub/pulley and remove it from the motor shaft.

Replacement Notes:

Adjust the belt tension (Section 4).

Follow-up Checks/Adjustments:

See Table 3-1.

3.27 Horizontal (X-axis) Turret Motor Belt Removal

1) Remove the projection assembly and install it on the projection mount tool (3.17).

NOTE - *Before lifting the projection assembly out of the instrument, ensure that your projection mount tool is set up to match the diameter of the carriage rails (3/8") on the projection assembly.*

2) Carefully slide the X-axis turret motor belt off the large gear at the top of the turret.

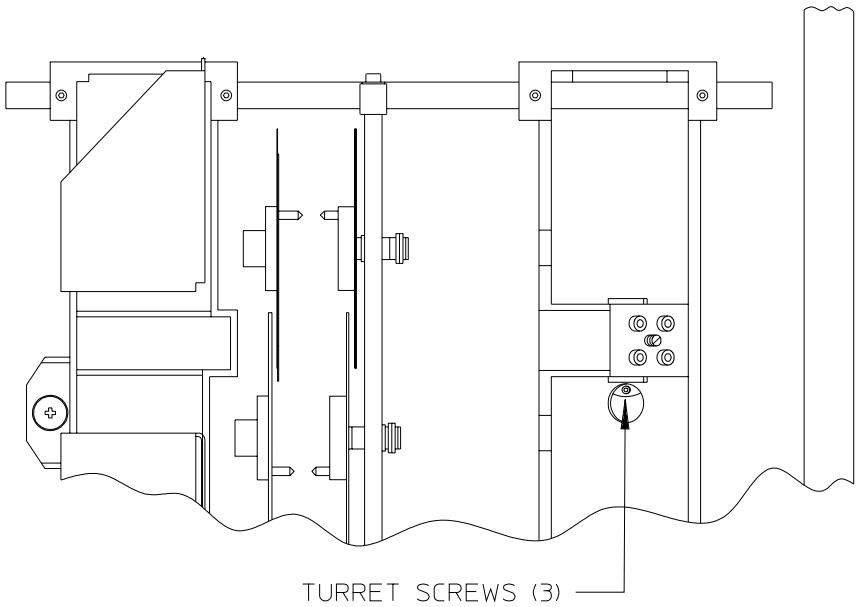

FIGURE 3-7. Turret Removal

3) From the top side of the assembly, locate the hole in the casting that provides access to the top edge of the turret. Through this hole, one by one, remove the three screws that hold the turret in place (Figure 3-7).

   (As the screws are removed, the X-axis edge detector flag on the turret becomes loose. Check that the loosened flag does not hit the edge detector and block rotation of the turret for access to the third screw.)

4) Carefully pull the turret out of its top bearing.

   NOTE - *Be careful to prevent dust or debris from reaching the internal optics of the turret while the turret is open.*

5) Remove the turret motor belt.

Replacement Notes:

- Check/adjust the horizontal (X-axis) edge detector on the turret before reinstalling the projection assembly into the instrument.
- Adjust the belt as necessary (see Section 4).
- When the three turret screws have been tightened, secure each one with a small dab of Loctite® No. 222 (see Appendix A for part number).
- When reassembled, manually rotate the turret to check for smooth movement throughout its normal range.

Follow-up Checks/Adjustments:

Clean the optics. See Table 3-1.

3.28 Vertical (Y-axis) Turret Belt/Motor Removal

Caution — Be careful not to damage or dirty the bowl.

1) Remove the Y-axis turret belt from the large pulley.

2) Remove the Y-axis turret belt from the small pulley.

Motor Removal:

3) Remove the two screws securing the Y-axis motor cable bracket.

4) Disconnect the motor cable at the connector.

5) Loosen the two setscrews on the motor pulley and remove it from the shaft.

6) Remove the four screws securing the Y-axis motor to the turret assembly.

7) Remove the Y-axis motor.

Replacement Notes:

Adjust the belt tension (Section 4).

Follow-up Checks/Adjustments:

See Table 3-1.

3.29 Brightness Detector (PCB) Replacement

1) Remove the front cover (3.2).

2) Rotate the turret to expose two screws securing the Brightness Detector PCB to the detector assembly (Figure 3-8).

Caution — Do Not loosen or remove the screws that secure the detector housing to the turret. If you do, it will be necessary to perform the detector alignment procedure.

3) Disconnect the detector from its flex cable.

4) Remove the two screws exposed in step 2 (see Figure 3-8).

Caution — Once the Brightness Detector PCB is removed in the next step, use care to not invert the detector housing, otherwise the small optics may fall out.

5) Remove the Brightness Detector PCB.

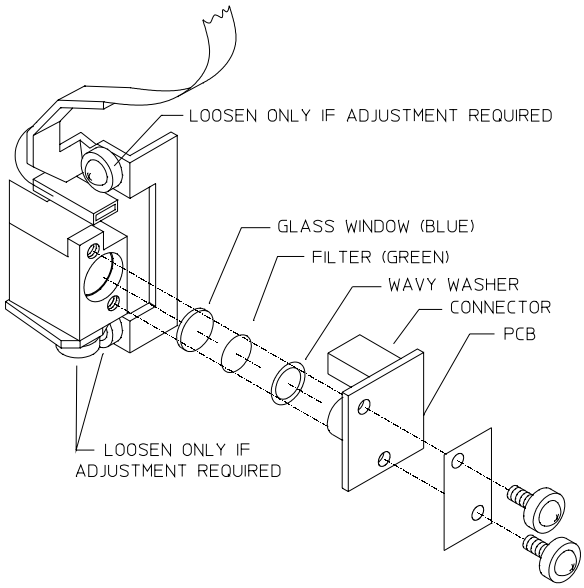

FIGURE 3-8. Brightness Detector Removal

Replacement Notes:

- Use care to not get dirt or fingerprints on the detector optics or on the turret lens.
- If any of the small optics have fallen out of the housing, make sure they are clean before reinstalling them, and that they are installed in the correct order (Figure 3-8).

Follow-up Checks/Adjustments:

See Table 3-1.

3.30 Lower Turret Removal

1) Remove the front cover (3.2).

2) Remove two screws on the side of the lower turret pulley to detach the lower turret assembly.

   Carefully let the lower turret assembly hang by its cable.

Replacement Notes:

- Adjust the belt tension (Section 4).
- Check clearances of Y-motor edge detector.

Follow-up Checks/Adjustments:

See Table 3-1.

3.31 Turret Cable Assembly Removal

Replacement Notes:

- If a turret cable requires replacement, all three cables must be replaced as an assembly.

Caution — Before removal of the old cable assembly, carefully note cable routing and taping. Failure to properly install the turret cable assembly will cause turret binding and turret noise.

Follow-up Checks/Adjustments:

See Table 3-1.

3.32 Chinrest/Headrest Switch Assembly Removal

1) Remove the operator panel (3.4).

2) Remove the three screws securing the chinrest switch assembly bracket.

3) Remove the chinrest switch assembly .

Replacement Notes:

Follow-up Checks/Adjustments:

See Table 3-1.

3.33 Chinrest Y-axis Belt/Motor Removal

Belt:

1) Remove the front cover (3.2).

2) Remove the four screws securing the chinrest motor to the bracket.

3) Slip the belt off over the lip of the chinrest motor pulley.

4) Slip the belt off over the lip of the chinrest pulley.

Motor:

1) Remove the front cover (3.2).

2) Make note of the cable ties holding the cable to the chinrest motor, then cut the cable ties. Disconnect the cable at the connector.

3) Remove the four screws securing the chinrest motor to the bracket.

4) Slip the belt off over the lip of the chinrest motor pulley, and remove the motor.

Replacement Notes:

- Adjust the belt tension (Section 4).
- Be sure to secure the connector to the motor body with a cable tie.
- Reattach the ground wire under the motor mounting screw.

Follow-up Checks/Adjustments:

See Table 3-1.

3.34 Patient Support Horizontal (X-axis) Belt/Motor Removal

NOTE - *The headrest drive belt drives the headrest horizontally in sync with the chinrest. Anytime the headrest belt is off, if either the headrest or chinrest lead screw is rotated independently, the headrest and chinrest will become misaligned.*

- Remove the front cover (3.2).
- Pull the headrest drive belt (long belt) to move the chinrest horizontal lead screw nut up against its limit nearest to the X-motor. (Since the chinrest and headrest horizontal lead screws are linked by the belt, both lead screws will rotate when the belt is pulled.)

Belt Removal:

1) Remove the four screws securing the chinrest assembly to the front cover assembly (Figure 3-9).

2) Lift the chinrest assembly away from the front cover assembly and remove the belt from the X-motor pulley.

3) Maneuver the belt downward between the headrest pulley and the front cover assembly until the belt is free.

Motor Removal:

1) Remove the four screws securing the chinrest assembly to the front cover assembly (Figure 3-9).

2) Remove the chinrest assembly.

(continued)

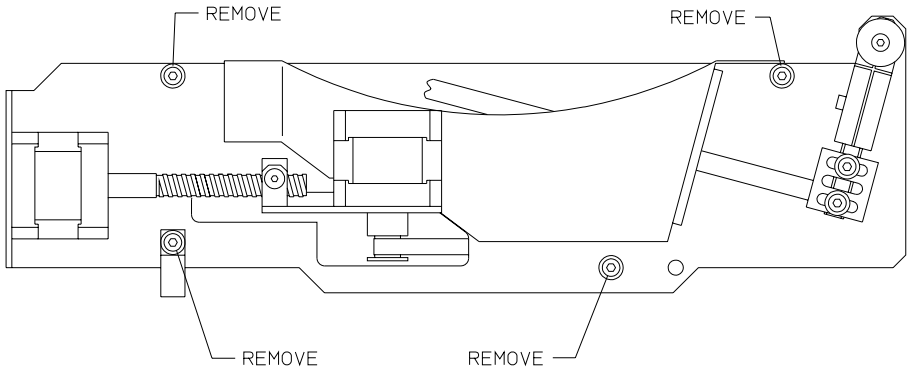

FIGURE 3-9. Removing the Chinrest Assembly

3) Disconnect the "X-MOTOR" cable (P4) from the Patient Support Interconnect PCB. Cut any cable ties holding this cable to the Patient Support Interconnect PCB.

4) Rotate the motor shaft to position the lead screw nut close to the X-motor (Figure 3-10).

5) Loosen the setscrews holding the lead screw to the motor shaft.

6) Grasp the chinrest and move it away from the X-motor until the lead screw disengages from the motor shaft.

7) Remove the four screws securing the X-motor to the bracket, and remove the motor.

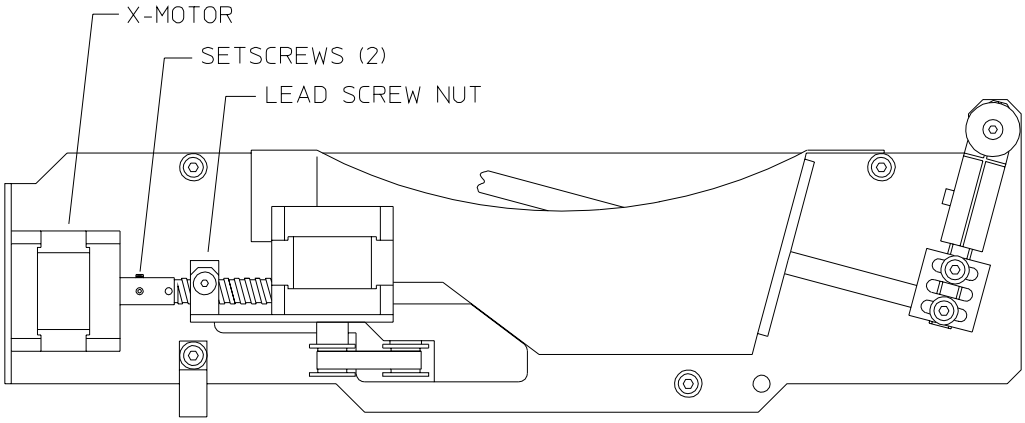

FIGURE 3-10. Disconnecting the X-Motor Lead Screw from the Motor Shaft

Replacement Notes:

- Be sure to reinstall a nylon washer on the motor shaft before attaching the lead screw. The lead screw should be seated on the motor shaft all the way up to the motor body before tightening the setscrews.

- Before installing the belt:
  After the lead screw is secured to the motor shaft, rotate the shaft to position the lead screw nut up against its limit nearest to the motor. Then set the headrest horizontal lead screw nut to the same relative position (check for the same amount of thread showing on both lead screws).

- Adjust the drive belt (Section 4).
- Be sure to reinstall the wire clamp and carefully position the wires to prevent contact with any of the moving chinrest mechanism (see Figure 3-11 for routing of cables and locations of cable ties).

Follow-up Checks/Adjustments:

See Table 3-1.

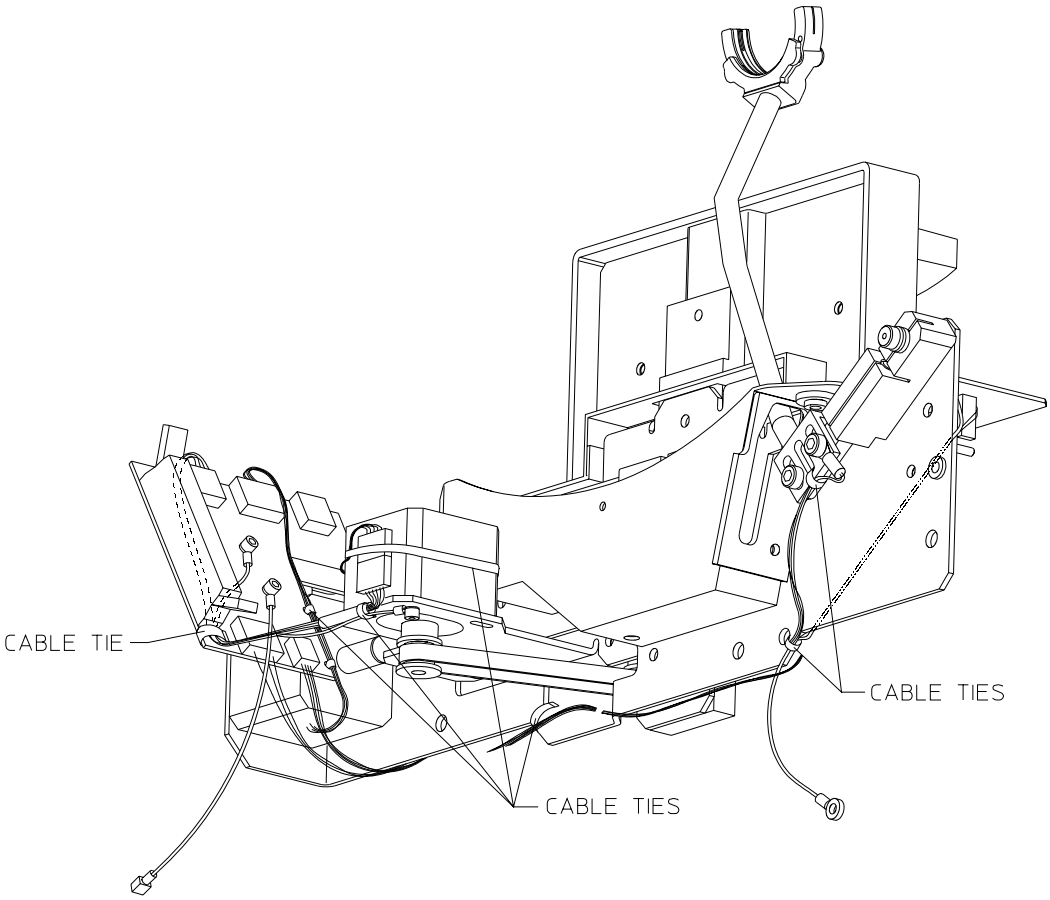

Note: Dotted line indicates cable lies *behind* object shown in foreground.

Note: The cable emerging from base of trial lens holder must have adequate slack for lowering the trial lens holder.

FIGURE 3-11. Trial Lens Assy Cable Routing and Cable Ties

3.35 Chinrest Vertical Slide and Lead Screw Removal

1) Remove the front cover (3.2).

2) Remove the four screws securing the chinrest assembly to the front cover (Figure 3-9), and remove the assembly.

3) Remove the plastic chinrest (2 screws).

4) Remove the chinrest cover bracket (2 screws).

5) Turn the pulley on the chinrest X-axis motor to move the chinrest assembly left or right to gain access to the screws holding the vertical lead screw and vertical slide.

Replacement Notes:

- Before installing the headrest drive belt, set the chinrest and headrest horizontal lead screw nuts both to the same relative position (check for the same amount of thread showing on the same side of the lead screws).

- Adjust the drive belt (Section 4).

Follow-up Checks/Adjustments:

See Table 3-1.

3.36 Chinrest Horizontal Slide Removal

1) Remove the front cover (3.2).

2) Remove the four screws securing the chinrest assembly to the front cover (Figure 3-9).

3) Remove the two screws holding the trial lens trap.

4) Remove the two screws holding the stationary part of the horizontal slide.

5) Remove the two screws holding the moving part of the horizontal slide.

6) Remove the entire slide assembly out from between the stationary bracket and the movable bracket of the chinrest assembly.

Replacement Notes:

- Check the tension of the vertical (Y-axis) and horizontal (X-axis) drive belts (Section 4).
- Straighten the bristles on the trial lens trap brush to position them to the inside of the slot in the trap.
- Before installing the headrest drive belt, set the chinrest and headrest horizontal lead screw nuts both to the same relative position (check for the same amount of thread showing on the same side of the lead screws).

Follow-up Checks/Adjustments:

See Table 3-1.

3.37 Trial Lens Holder Assembly Removal

1) Remove the front cover (3.2).

2) Disconnect the "TRIAL LENS LEDS" cable (P5) from the Patient Support Interconnect PCB. Cut any cable ties securing this cable.

3) Remove the two screws that secure the trial lens holder assembly to the pivot shaft.

4) Cut the cable tie that secures the ground wire and trial lens LED wires to the trial lens holder assembly. (The same ground wire will be used with the replacement trial lens holder.)

5) Carefully manipulate the lower end of the trial lens holder and attached cable out through the slot in the trial lens trap.

If the pivot block removal is also required, continue as follows:

Caution — A captive steel ball and compression spring will fall loose as the pivot block is removed (Fig. 3-12).

6) Hold the pivot block against the main patient support bracket, and remove the pivot screw from the trial lens holder (Figure 3-12).

7) Once the pivot screw has been removed, slowly raise the pivot block and catch the steel ball and compression spring as they are released.

Replacement Notes:

- Be sure that the steel ball and compression spring are in place before securing the pivot block.
- Make sure that the curved washers are positioned on the pivot screw with the correct side against the flat washer (Figure 3-12).

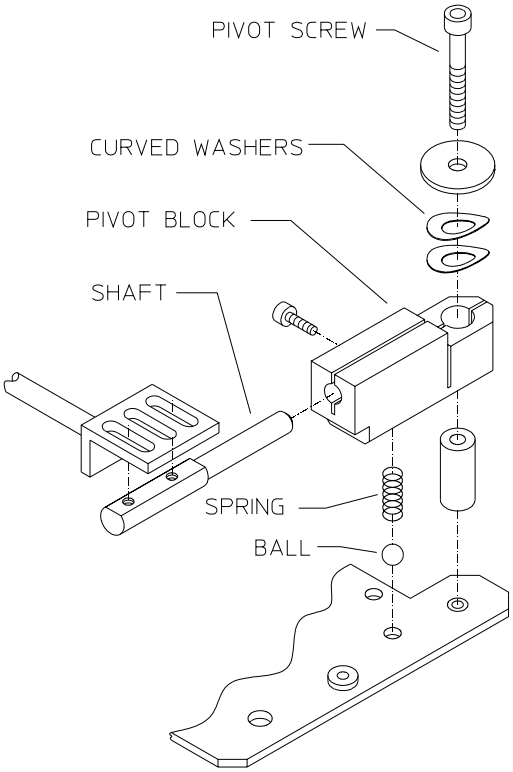

FIGURE 3-12. Pivot Block Removal

- Before reinstalling the trial lens holder assembly in the patient support assembly, check for proper operation of the edge detector flag when the trial lens holder is raised and lowered. Ensure that the compression spring that holds tension against the flag is not over-compressed and preventing proper movement of the flag.

- Before reinstalling the front cover, lift and lower the trial lens holder several times to check that it operates properly and that the wires to the trial lens holder are not catching or rubbing against the cover.

- Refer to Section 4.9.6 for Trial Lens Holder alignment.

Follow-up Checks/Adjustments:

See Table 3-1.

3.38 Top Fan Removal

1) Remove front and rear covers (3.2, 3.3)

2) Unplug the fan cable.

3) Remove the two screws attaching the fan bracket to the chassis.

Replacement Notes:

- Make sure that the fan wires are positioned in the narrow slot in the edge of the plastic fan housing, and that they are not pinched when the fan mounting screws are tightened.

Follow-up Checks/Adjustments:

See Table 3-1.

3.39 Bowl IR LED Assembly Removal

1) Remove the front and rear covers (3.2, 3.3).

2) Remove the tape holding the IR LED assembly wires to the outside of the bowl, and unplug the connector.

3) For the right-hand bowl IR LED, slide the connector and wires out towards the front, between the bowl and the baffle and the bottom of the bowl.

Replacement Notes:

- Tighten the left/right IR LED mounting screws only finger tight until after adjustment has been performed.

Follow-up Checks/Adjustments:

See Table 3-1.

3.40 Blue-Yellow Module / Bowl Plug Removal

This procedure is for removing the Blue-Yellow module in units equipped with the Blue-Yellow feature, or the Blue-Yellow bowl plug in units not equipped with the Blue-Yellow feature.

1) Remove the front and rear covers (3.2, 3.3).

2) Remove the two screws and washers securing the Blue-Yellow module or unsnap the Blue-Yellow bowl plug from the bowl.

3) Lift out the Blue-Yellow module or bowl plug from the top of the bowl.

Replacement Notes:

Make sure that no light is entering the bowl after reinstalling assembly.

Follow-up Checks/Adjustments:

See Table 3-1.

3.41 Bowl Removal

Caution — Be careful not to damage or dirty the bowl.

1) Remove the front and rear cover assemblies (3.2, 3.3).

2) Remove the projection assembly (3.17).

3) Remove the blue-yellow module (if so equipped) or blue-yellow bowl plug (3.40).

4) Remove the four screws securing the front of the bowl to the chassis.

5) Disconnect:

- The ribbon cable on the Fixation Interconnect PCB.
- Camera cable from the lower-left corner of the Motor Driver PCB. (This is the cable from the camera PCB.)

- The power Connector on the backside of the Motor Driver PCB.

6) Remove the screw that secures the chassis end of the ground wire that comes from the right-hand bowl lamp assembly.

7) Remove two screws securing the left end of the air baffle located below the bowl.

Caution — In the next step, watch closely to prevent the camera from catching on cables behind the bowl and the IR LEDs from catching on the lower front baffles.

8) Flex the baffle outward. While holding out on the baffle, lift the bowl until it clears the chassis on the left side, then move the top of the bowl outward and lift it out of the instrument.

9) If a new bowl is going to be installed, note how the wires are routed and taped on the old bowl before you begin stripping it.

Replacement Notes:

- A replacement bowl comes completely stripped. (See procedure 3.44 for installation of the IR bowl plugs on models 720i.)
- On a replacement bowl, secure the wires to the backside of the bowl as they were on the original bowl.
- Make sure the foam gaskets are properly seated between the bowl and the fan housing of the top fan.
- When reinstalling the bowl, carefully guide the end of the camera past the DC power harness in the instrument chassis.

Follow-up Checks/Adjustments:

See Table 3-1.

3.42 Reflex Gaze LED Removal

The Reflex Gaze LED is part of the Fixation Interconnect PCB.
(See Fixation Interconnect PCB Removal, Section 3.15)

NOTE - *The reflex gaze LED is used in the models 720i for additional eye illumination to help differentiate the iris and pupil in the video insert for patients with a dark iris. In the 740i and 750i, the reflex gaze LED is used to monitor gaze tracking.*

3.43 Bowl Lamp Assembly Removal

1) Remove the front cover assembly (3.2).

2) Remove the rear cover assembly (3.3).

3) Loosen the four bowl mounting screws to relax the bowl.

4) Unplug the right/left bowl lamp connector from the Fixation Interconnect PCB.

5) Remove the tape securing the bowl lamp cable to the bowl.

6) Remove the hex head screw securing the ground cable to the frame.

7) Remove the two hex head screws (inside the bowl) securing the lamp assembly to the bowl.

8) **For Right Bowl Lamp**: Remove the complete lamp assembly by lifting up and maneuvering it out from the ***front*** of the instrument, between the bowl and frame.
For Left Bowl Lamp: Remove the complete lamp assembly by lifting up and maneuvering it out from the ***back*** of the instrument, between the bowl and frame.

Replacement Notes:

- The bowl lamps must be replaced in pairs only.
- The bowl lamp baffles snap into place.

Follow-up Checks/Adjustments:

See Table 3-1.

3.44 IR Bowl Plug Removal/Installation

1) Remove the two screws holding the IR Illumination Plug Bracket to the bowl.

2) When installing the IR Bowl Plug, you must rotate the plug until it's contoured tip is flush with the inner surface of the bowl before tightening the screw that holds it to the bracket

Replacement Notes:

Follow-up Checks/Adjustments:

See Table 3-1.

3.45 Quarter-Turn Fastener Replacement

The 1/4-turn fastener consists of a 1/4-turn stud and an anchor. The stud is commonly captured in place by a small plastic washer. The anchor is held in place by an internal, spring-loaded tab at the upper (outer) end of the anchor.

If it becomes necessary to replace the anchor, proceed as follows.

To remove the anchor:

1) Insert a 1/4"-wide screwdriver blade into the two small slots in the spring-loaded tab at the upper end of the anchor.

2) Push in on the tab with the screwdriver and turn it 1/8 turn ***counterclockwise***, to latch the tab in its install/remove position. Remove the screwdriver and push the anchor out towards the front.

To install the anchor:

3) Make sure that the spring-loaded tab inside the anchor is latched in its install/remove position (1/8 turn counterclockwise), then insert the anchor into its hole in the assembly.

4) Insert a 1/4"-wide screwdriver blade into the two small slots in the spring-loaded tab.

5) Push in on the tab with the screwdriver and turn it 1/8 turn ***clockwise*** to its anchored position. Remove the screwdriver and check that the anchor is properly secured in place.

Section 4 - Adjustment / Calibration

4.1 Introduction

This section contains the procedures for adjustment and calibration of the *HFA II - i*. It is important that you use Table 3-1 in Section 3 to determine when adjustments/calibrations are required following removal/replacement of various parts and assemblies of the *HFA II - i*.

The information contained here reflects the latest revision level of software as of the time of this writing. Always check your Field Service Bulletins for possible subsequent changes to these procedures.

Calibration and Adjustment Flow Chart

The flowchart shown on the following page provides an overview of all required instrument calibrations and adjustments. Additionally, each block contains the section number in this manual where detailed procedures can be found for that specific calibration or adjustment.

Calibration/Diagnostics Access, Diagnostics Menu, and *Calibration Menu* selections are all software options. That is, each of these blocks is available via a menu screen. Whereas, the *Other* blocks are all mechanically related adjustments and are not available via software.

> ***NOTE:*** *The Other blocks, labeled Trial Lens Holder, Camera Focus, and Bowl IR LEDS/Mirror, are mechanical adjustments that must be checked/performed prior to performing the related software calibrations of Position and Intensity.*

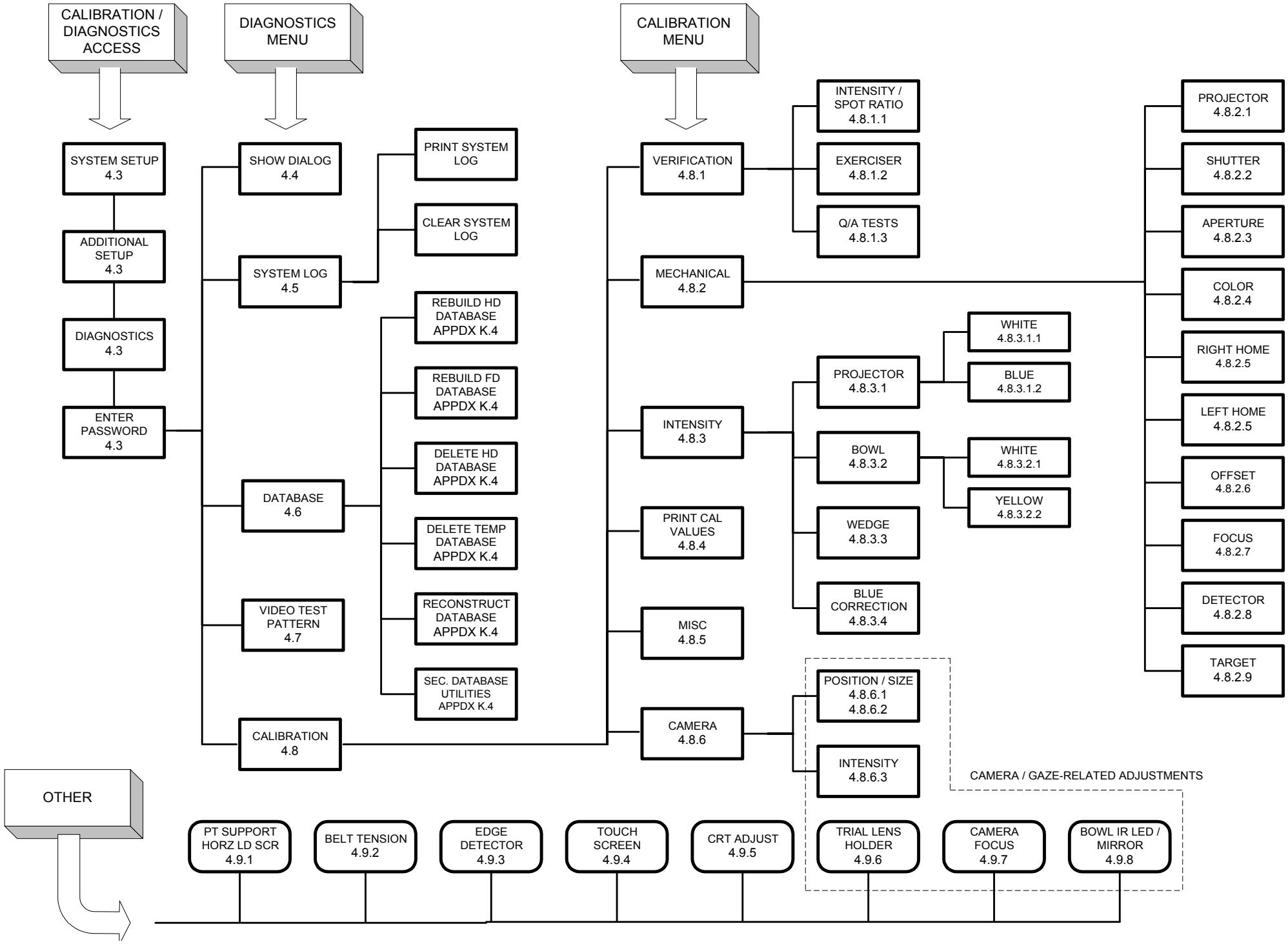

FIGURE 4-1. Cal / Adj Flowchart

4.2 Related Procedures

4.2.1 *HFA II - i* Calibration and Service Guidelines

NOTES:

1. *Various procedures within the Adjustment/Calibration section make reference to HFA II - i White Light Verification Data Printouts. How these printouts and other required service paperwork are utilized on an HFA service call are described in Section 1. Section 1.3.2 (Three Steps to Completing an HFA II - i Service Call) and Section 1.3.3 (HFA II - i Field Service Paperwork Requirements) provide a basic approach to servicing the HFA II - i and the required paperwork needed to complete the call.*
2. *Following any calibration procedure that has calibration values stored on the hard drive, storage of the new values must be verified by cycling the power off-on before you perform final system checkout. If values obtained during calibration are not within the expected range, those values are held only in temporary storage and not written to the hard drive. When power is turned off, these values are erased and calibration reverts to its old status.*

There are several calibration procedures that require the tool stand to be placed on the chin rest (see Figure 4-2). Once the tool stand has been installed, ensure that the metal standoffs touch the forehead rest when performing the indicated calibration.

NOTE: Push the Tool Stand with your finger as shown or use the Fore Head Rest Clip Tool as shown in the Appendix.

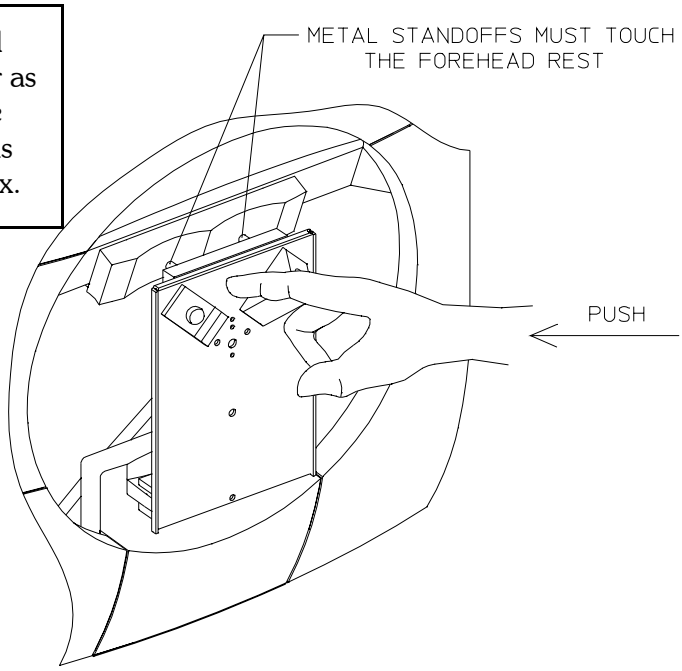

FIGURE 4-2. Proper Tool Stand Positioning

4.3 Calibration / Diagnostics Access

Access to the *HFA II - i* calibration and diagnostics menus is password protected. The password is proprietary and should be carefully protected.

To initiate access to the calibration and diagnostics functions, perform the following:

- From the instrument's Main Menu, select `System Setup`.
- Select `Additional Setup`.
- Select `Diagnostics`.
- When the ten-key pad appears, type in the password. Then select [Enter].

4.4 Show Dialog

Pressing the *Show Dialog* button will display a ten-key pad. This selection is left over from Development. Pressing [Enter] will return to the previous menu.

4.5 System Log

The System Log option enables the Service technician to either print or clear the System Log. Refer to Appendix J for a detailed description of the System Log and its uses.

Print System Log — This selection prints out the log.
Clear System Log — This selection clears (erases) the log.

4.6 Database

The database selection provides a number of utilities that can be used by the Service technician when problems such as data loss or corruption have occurred to the patient database. The database utilities are accessed via the *Calibration and Diagnostics* menu, however, they have nothing to do with actual instrument calibration and adjustment. As a convenience, Appendix K has been developed to describe each utility and their use in correcting database related problems. Please refer to Appendix K for additional information.

4.7 Video Test Pattern

This option allows the Service technician to display a test patten on the CRT. The test pattern may be used when performing CRT alignment and symmetry adjustments. There are options to display the pattern for two minutes or one hour. Cycling power is OK.

4.8 Calibration

The *Calibration* main menu is the principle, or main menu for performing instrument verification and calibration. The menu consists of the following selections:

Verification — Used to verify the Before and After light intensity calibration.
Mechanical — Used to calibrate the projection and turret assemblies.
Intensity — Used to calibrate the spot and bowl intensities.
Print Cal Values — Used to print out the EEPROM settings and wedge values.
Miscellaneous — Used only by Manufacturing.
Camera — Used to calibrate the CCD camera and gaze illuminators.
Save — Used to save the calibration data to the floppy calibration diskette.
Restore — Used to restore the calibration data from the floppy calibration diskette to the hard drive.

4.8.1 Verification (Obtaining *Before* and *After* Light Intensity Calibration Values)

4.8.1.1 Intensity / Spot Ratio

Purpose

The purpose of this procedure is to determine the current state of the instrument light intensity calibration, both before and after servicing the instrument. The *before* and *after* information is compared to determine if the instrument has had any significant light intensity calibration shift during service.

Special Tools/Equipment Required

- Soligor Light Meter Kit
- Digital Multimeter, Fluke 8060A or equivalent
- Bowl Shroud
- Small Flashlight

Prerequisites

- All white intensity related calibrations must be performed with dim room light. The dimmer the instrument light, the darker the room must be. Because of the very low blue light levels, blue-yellow calibration requires total darkness. (Use a small flashlight occasionally to read meters, etc.)

Procedure

NOTES:

1. *You will print out all values obtained during this procedure. All values are automatically recorded on the HFA II - i Light Intensisty Verification Data printouts (**Before service** or **After service**, as appropriate).*

If the service call requires both Before and After verification of the light intensities, a Calibration Shift Worksheet must be completed to determine the difference or 'shift' in light intensity. Refer to Appendix I, Service Forms.

Preparation:

Depending on the instrument model, perform the preparation steps for models 740*i* / 750 i or for model 720*i*. (The model 720*i* does not offer the foveal threshold test; to acquire values surrounding the foveal area a 10-2 SITA test must be run.) These two tests provide a quick reference for determining an instrument's light intensity quality.

For Models 740*i* – 750*i*

1) Select a threshold patient test and turn on foveal threshold. Start the test, obtain your foveal threshold value, pause the test, and then select the Print icon. Your foveal value will be printed out. Label this printout either Before or After (as required). Save this printout, as you will return it with your instrument repair paperwork.

For Model 720*i* (This test will take approximately three minutes to run.)

NOTE: *You can print partial after Primary prints.*

2) Select the `10-2 test` from the main menu (or go into `Show Test Library`, select `Threshold`, then `10-2`).

3) In the Patient Data screen, enter *your birth date*, then select `Proceed`.

4) When the 10-2 test comes up, select `Change Parameters`, set Test Strategy to `Sita-Fast`, and then press `Selection Complete`.

5) Start the test. With patient response button in hand, position yourself on the chin rest. With both eyes open and fixating on the yellow target, complete the test.

6) The test will take about 2 to 3 minutes to complete. When finished, you will hear two beeps and the test results will be displayed.

7) Select the `PrintIcon` and print the results, but do not save them to disk.

8) The four dB numbers nearest fixation (center of field) should be the highest values. Compare these numbers as you would with the Foveal Threshold values you receive on Models 740*i* – 750*i*. Label this printout either Before or After (as required). Save this printout, as you will return it with your instrument repair paperwork.

Setup: (for all *HFA II - i* models)

1) Set up the Soligor light meter on the *HFA II - i* and zero out the meter (Appendix A). (For the *Before Service* readings, leave all covers on and cover instrument with bowl shroud.)

2) Set the light meter to `position 1`.

3) From the Main Calibration menu, select `VERIFICATION`, then `INTENSITY/SPOT RATIO`.

4) Select either `BEFORE` or `AFTER`, as appropriate.

   NOTE: *The Mfg and QA selections are for manufacturing use only. Selecting either of these two buttons will set tolerance values which are much tighter than those required for field service evaluation.*

5) Set up the instrument as follows to calculate the foot-lamberts for you:

   a) Select P1, P2 and P3, and enter the P1, P2 and P3 factors from your Soligor Meter. Select P3B, P3Y and P3F if your light meter has these factors, otherwise enter the BYP3 factor on your meter for P3B and enter the P3 factor for P3Y and P3F.
   b) Select `METER` and enter your light meter serial number.

   NOTE: *The Auto Verify and Spot Ratio selections are only used in manufacturing. The Read P Factors use is described in Appendix A 2.19.*

White Spot Intensity Verification:

6) Select `WHITE`, then `#31/0dB`. A ten-key pad appears on the screen.

   NOTE: *Allow the projection lamp to remain lit for at least 3 minutes before proceeding to the next step.*

7) Position the light meter roughly on the projected spot, then maximize the reading by positioning the chinrest via the chinrest control switch. (First left/right, then up/down, then refine with left/right again. If you subsequently move the light meter accidently, repeat this step in order to remaximize the meter reading.)

8) Enter the voltage reading via the ten-key pad and select [Enter]. The calculated foot-lamberts will be displayed next to #31/0dB. Also displayed is the tolerance for each reading. If an asterisk (*) appears, this indicates a reading that is out of tolerance.

9) Select `#32/4dB` and enter the voltage reading via the ten-key pad. Repeat the same procedure for selection #33/9dB.

10) Switch to meter `position 2` on the light meter and repeat the procedure for selection #34/14dB and then #35/19dB.

11) Switch to meter `position 3` on the light meter and repeat the procedure for selections #36/24dB, #37/29dB, and #38/34dB. (#39 is not used at this time.)

White Bowl Intensity Verification:

12) Select `#61/BOWL`. The bowl lamp warm-up period will begin. (You may cancel from the warmup period when the voltage stabilizes at >20%.)

    After the warmup period ends or when the voltage reading has stabilized:

13) Enter the voltage reading via the ten-key pad.

14) If the *HFA II - i* is equipped with the Blue-Yellow option, proceed to the Blue Spot Intensity Verification below.

    If the *HFA II - i* is *NOT* equipped with Blue-Yellow option, select `PRINT` to print out the *HFA II - i* White Light Verification Data printout. Then proceed to Cal/Wedge printout below.

Blue Spot Intensity Verification:

15) Select `BLUE/YELLOW`, and then `#62/0dB`.

16) Ensure that the light meter is set to `position 3.`

17) Position the light meter on the projected spot, then maximize the reading by positioning the chinrest via the chinrest control switch. (First left/right, then up/down, then refine with left/right again. If you subsequently move the light meter accidently, repeat this step in order to remaximize the meter reading.)

18) Enter the #62/0dB voltage reading via the ten-key pad on the screen and select [Enter]. The calculated foot-lamberts will be displayed. Also displayed is the tolerance for each reading. If an asterisk (*) appears, this indicates a reading that is out of tolerance.

19) Repeat the procedure for each of the selections #63/3dB thru #65/13dB. (#66 and #67 are not used at this time.)

Yellow Bowl Intensity Verification:

20) Select `BLUE/YELLOW` and select `BOWL`.

21) Allow 3 minutes for lamp warm-up and ensure that the light meter is set to `position 3.`

22) Enter the BOWL voltage reading via the ten-key pad on the screen.

23) Select `DONE` and then `PRINT BOTH` to print out both the *HFA II - i* White Light and Blue-Yellow Light Verification Data printouts. Then proceed to Cal/Wedge Printout below.

Cal/Wedge Printout:

1) From the Main Calibration menu, select `PRINT CAL VALUES`.

2) On a Printrex printer, the printout will always be done on a single sheet. To get the printout on a single sheet with an HP printer, take the printer off-line and press `Form Feed`.

3) Proceed to Evaluating Results and evaluate the *HFA II - i* Light Verification Data printouts and Cal/Wedge printout results as indicated below.

Evaluating Results

NOTE: *An "Asterick" flags reading out of calibration.*

Evaluating White Light Verification Data Printout Results:

- **Projector Voltage** must be less than 10 volts.
- **Spot Positions and Background (Bowl):**
  - All must fall within the confines of the table.
  - The dB Spread can be no more than 1.0 dB.

Evaluating Blue-Yellow Verification Data Printout Results:

- **Spot Positions and Background (Bowl):**
  - All must fall within the confines of the table.
  - The dB Spread can be no more than 1.5 dB.

Evaluating Cal/Wedge Printout:

The values on the cal/wedge printout must fall within the ranges indicated in Appendix Table H1.

4.8.1.2 Exerciser

The Exerciser enables the Service technician to move the instrument's motors individually or in conjunction with one another. For additional details, refer to Section 5, Troubleshooting.

4.8.1.3 QA Tests

The Q/A Tests option enables the Service technician to manually select various aperture sizes and intensities to be presented in the bowl. Each test number is unique as to its size, intensity and location in the bowl. For additional details, refer to Section 5, Troubleshooting

4.8.2 Mechanical

4.8.2.1 Projector

Purpose

This procedure is designed to position the filament of the projection lamp so that the projected light becomes as uniform as possible across its area of illumination. The so-called Y-position of the filament is adjusted in this procedure; the X- and Z-positions are preadjusted at the factory and are not field adjustable.

Special Tools/Equipment Required

- +3.0 Diopter to +3.5 Diopter Trial Lens

Procedure

1) From the Mechanical Calibration menu, select PROJECTOR.

2) Hold a +3.0D to+3.5D trial lens in front of the turret lower lens so that the projected light passes through the lens and into the bowl.

3) Adjust the projection lamp adjustment screw (Figure 4-3) with a 2mm Allen as needed to center the projected filament image.

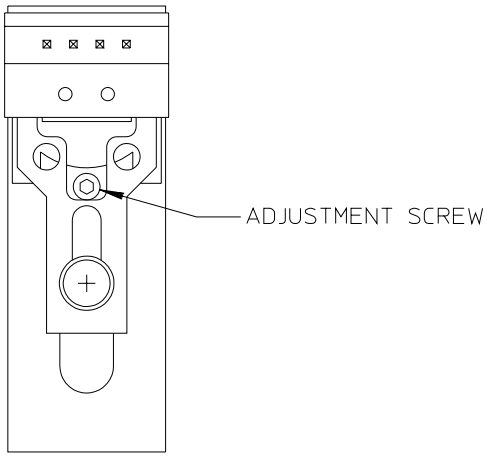

FIGURE 4-3. Lamp Filament Position Adjustment

4.8.2.2 Shutter

Purpose

This procedure ensures that the shutter is positioned correctly in the open and closed positions, and that it operates silently. (To avoid damage to the shutter, it should be calibrated as early in the calibration process as possible.)

Procedure

1) Make sure that the initial shutter adjustment is correct (the shaft is engaged through the shutter, and the shutter is approximately centered between the hub and the casting).

2) From the Mechanical Calibration menu, select `SHUTTER` and then `ALIGN SHUTTER`.

3) Using the UP and DOWN icons, position the shutter so that it is either flush with the boss edge or one step past the boss edge (see Figure 4-4). ***DO NOT*** position the shutter below the boss edge.

   NOTE: *When positioning the shutter,* ***ALWAYS*** *select* ***FLASH*** *after any movement command. For example if UP 1 Step is selected, then select* ***FLASH*** *and observe the shutter reaction.* ***DO NOT*** *make multiple movement selections without selecting* ***FLASH*** *after each selection, as this will create shutter calibration errors.*

   When the shutter has been correctly positioned, and is then flashed, it should be completely silent; no tapping or ticking sounds should be heard.

4) When the shutter is positioned correctly, select `STORE`.

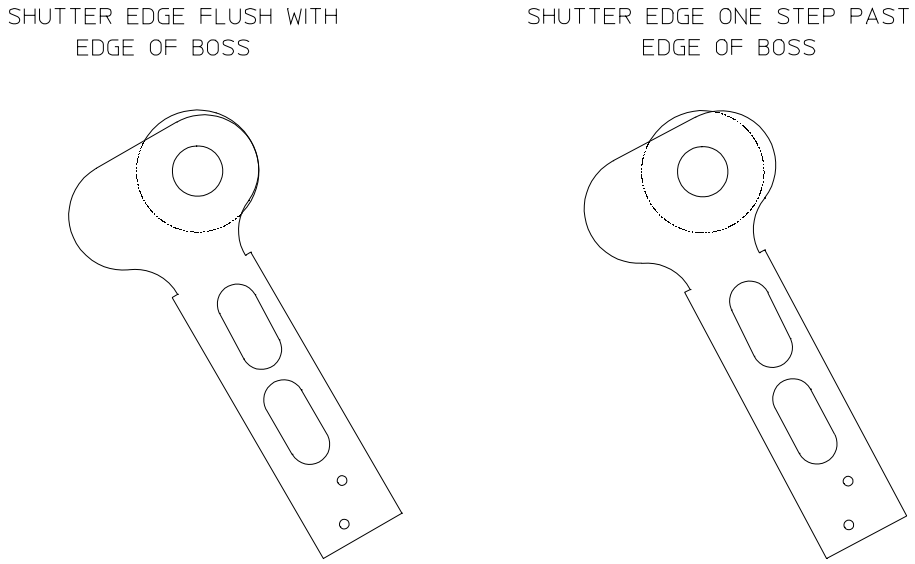

FIGURE 4-4. Shutter Positioning in Calibration

5) Verify that the printer is on-line, then print the CAL values. Verify that the shutter value is between 120 and 220.

   If the stored shutter value is out of range, loosen the shutter setscrew and reposition the shutter on the motor shaft as follows: (Removal of the film ND wedge may be required. If removed, make certain the setscrews are retightened when reinstalled.)

   a) If the Cal value is greater than 220, mount the shutter slightly higher (further clockwise) than previously positioned. Retighten the setscrew.

   b) If the Cal value is less than 120, mount the shutter slightly lower (further counter-clockwise) than previously positioned. Retighten the setscrew.

   c) Repeat steps 3, 4 and 5a or 5b, until the shutter value is within the specified range.

6) **Verification:** Proceed to the Motor Exerciser menu and exercise the film ND wedge for 100 iterations. Then exercise the shutter (with the lamp OFF) for 100 iterations. The shutter should operate silently.

4.8.2.3 Aperture

Purpose

This procedure is designed to ensure that all five holes in the aperture wheel are properly centered relative to the light path.

Special Tools/Equipment Required

- Pencil
- Small Piece of Self-Stick Note Paper

Procedure

1) Dim the room lighting to enable a better view of the stimulus.

2) From the Mechanical Calibration menu, select `APERTURE` and then `LENS BASED`.

   NOTE: *Currently, the GRID BASED selection is used only in manufacturing and requires a special tool.*

3) On the patient side of the aperture wheel (Figure 4-5), locate the reflected image of the III stimulus.

4) Using the STEP icons, rotate the aperture wheel until the reflected image and the III hole match (the light passes directly through the size three hole), then select `STORE`.

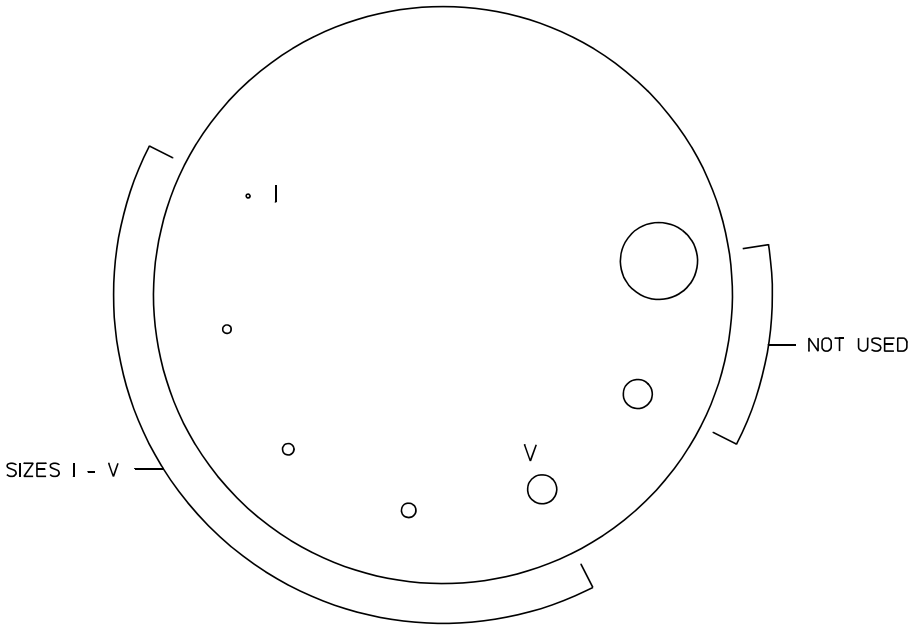

FIGURE 4-5. Aperture Wheel

5) Make a penciled cross on a small piece of self-adhesive note paper and stick it into the bowl such that the penciled cross is in the center of the III spot.

6) Select `aperture I`; position the spot on the penciled cross using the STEP icons (UP = left, DOWN = right); then select `STORE`.

7) Repeat step 6 with all the other apertures. (II,IV,V)

4.8.2.4 Color

Purpose

This procedure is designed to ensure that all holes in the color wheel are properly centered relative to the light path.

Procedure

1) If the rear cover is on the instrument, remove the projection lamp access cover.

2) From the Mechanical Calibration menu, select `COLOR`, and note that the Clear 1 color wheel filter is initially selected.

3) Observe the position of the hole in the color wheel in relation to the spot of light striking the wheel.

4) Using the pads on the screen, adjust the color wheel position UP or DOWN until the hole in the color wheel is centered within the spot of light; then press STORE.

5) Repeat steps 3 and 4 for each of the other color wheel filter selections (Clear 2, Blue, Red, Yellow).

4.8.2.5 Right / Left Home

Purpose

This procedure is designed to establish the initial X-Y positioning (home position) of the projected spot. The *HFA II - i* perimeter requires two separate home positions: one for the right eye, one for the left eye.

Procedure

1) From the Mechanical Calibration menu, select RIGHT HOME.

2) Center the stimulus spot on the central fixation hole by using the Y (Up or Down) icons or X (Left or Right) icons; then select STORE. Select DONE.

3) Repeat step 2 in the *LEFT HOME* mode, then return to the Mechanical Calibration menu.

4.8.2.6 Offset

Purpose

This procedure is designed to ensure that the stimulus is in the exact center of the offset fixation LEDs (diamond.)

1) From the Mechanical Calibration menu, select OFFSET. This causes the offset fixation LEDs to illuminate, and the size III stimulus to be projected in the center.

2) Using the Y (Up or Down) or X (Left or Right) icons, position the spot at the center of the fixation target LEDs, then select STORE.

4.8.2.7 Focus

Purpose

This procedure is designed to ensure a sharp focus at the center of the bowl.

Procedure

1) From the Mechanical Calibration menu, select FOCUS.

2) Using the BACK/FORWARD icons, bring the spot into sharp focus, then select STORE.

NOTE: *If you first rotate the glass wedge to partially dim the projected spot, you may find it easier to discern the point of sharpest focus.*

3) Use the UPPER CALIBRATION/LOWER CALIBRATION to verify focus in other than central positions. (Use this opportunity to check for "halo" around the spot — a sure sign of dirty optics.)

4.8.2.8 Detector

Purpose

Normally, detector position check/adjustment is required any time you have removed or replaced the detector PCB assembly, the detector housing, or the turret lower lens assembly.

Detector position is adjusted to assure that the maximum amount of light will be sensed by the detector. The alignment of the detector is critical. The *HFA II - i* uses only one detector to determine both spot and bowl intensity.

Special Tools/Equipment Required

- Brightness Detector Alignment Target

Procedure

1) Remove the Brightness Detector PCB (3.29).

2) While holding a clean lens tissue below the opening in the detector housing, tip the housing upward and tap it lightly so that the filter, glass window, and wavy washer drop out of the detector housing onto the tissue (Figure 4-6).

3) Insert the brightness detector alignment target into the detector housing. Ensure that it is properly seated.

4) From the Mechanical Calibration menu, select `DETECTOR`.

   Work carefully during the next steps to avoid accidently moving the turret. If the turret is accidently moved, select RESET to reinitialize the detector position.

5) With the room lights on, look into the alignment target and verify that the image of the projected spot falls within the inner box on the target (ideally, at the cross hairs).

6) If required, slightly loosen the screws that hold the detector housing to the turret assembly, and adjust as necessary.

Note **-** Ideally, the image of the spot should always be centered on the smaller, inner target box, an acceptable setting is to ensure that the spot is within the dotted circle (see image below). This will assure that the maximum amount of light will be sensed by the detector.

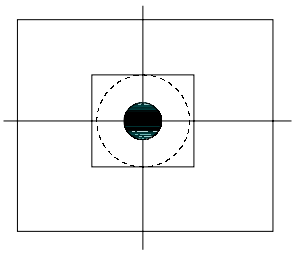

Acceptable Spot Image

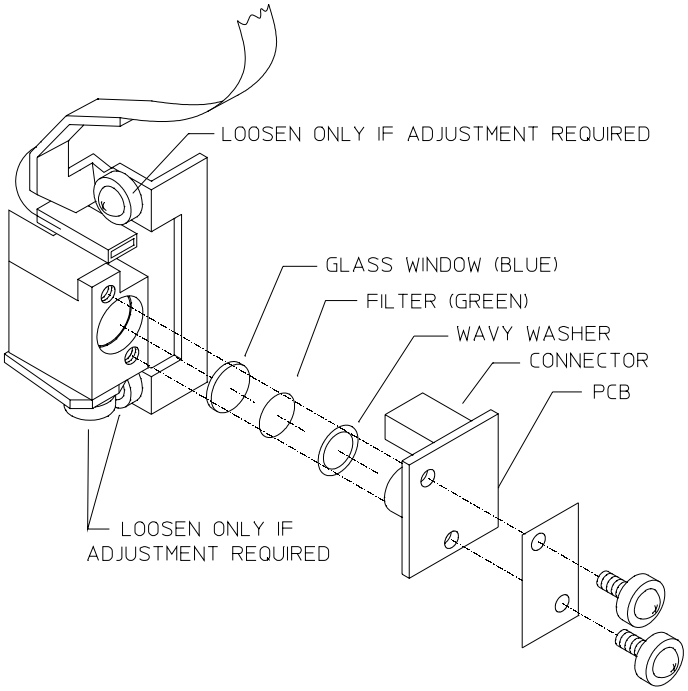

FIGURE 4-6. Brightness Detector Removal

4.8.2.9 Target

Purpose

This procedure is used to verify that the size III spot falls within the required tolerance zone in various areas of the bowl. This is a verification only; if the instrument does not meet the required tolerance, check *Right Home* and *Left Home* calibration. If the instrument still fails to meet the specified tolerance, troubleshooting and appropriate repair are required.

Special Tools/Equipment Required

- Spot Positioning Cross Fixture ("cross tool")
- Drafting Tape

Setup

1) Remove the front cover assembly (Section 3.2). Refer to Figure 4-7.

2) Insert the center pin of the cross tool into the central fixation hole in the bowl and hold it in place; then attach the horizontal band of the cross tool as follows:

   a) Fit the locating hole at each end of the horizontal band of the tool over the corresponding pin or tab on the outer edge of the bowl.
   b) While pressing the horizontal band against the bowl, apply a short piece of drafting tape halfway out on each horizontal leg of the cross tool to hold it flat against the bowl surface.

3) Position and tape the vertical band of the cross tool, using the small hole in the center bottom edge of the bowl as reference.

Procedure

1) From the Mechanical Calibration menu, select TARGET.

2) Verify that for each of the 6 selections on the Target Verification menu, the size III stimulus falls within the corresponding dotted circle on the cross tool.

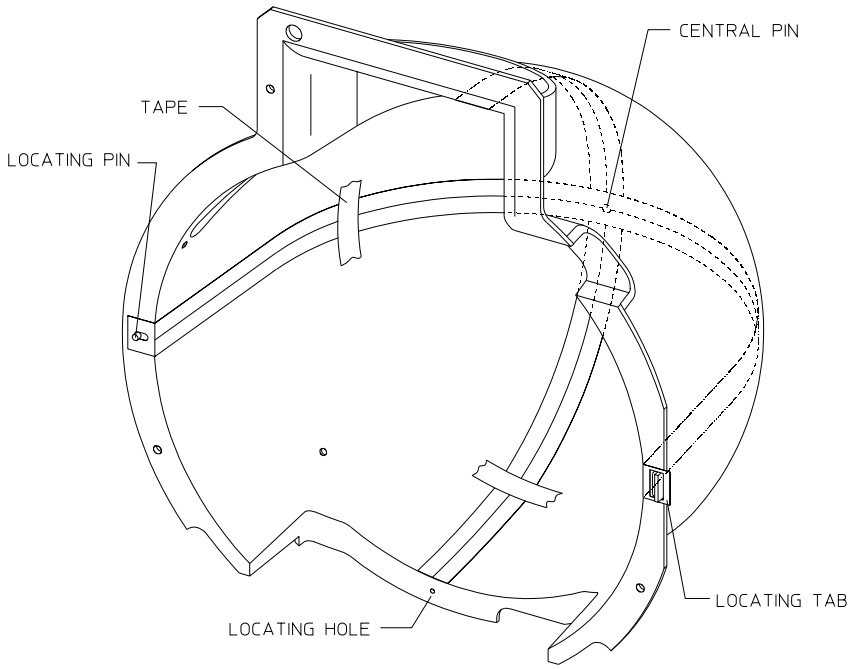

FIGURE 4-7. Spot Positioning Cross Fixture

4.8.3 Intensity

4.8.3.1 Projector

4.8.3.1.1 White

Purpose

This procedure ensures that the maximum brightness of the projected number V spot in the bowl is close to the optimum 929 Ft-L while the voltage across the projection lamp is less than 10 volts.

Special Tools/Equipment Required

- Soligor Light Meter Kit
- Digital Multimeter, Fluke 8060A or equivalent
- Bowl Shroud
- Small Flashlight

Prerequisites

Before performing white projector intensity calibration, verify the following:

- Projection lamp filament voltage with lamp on. If voltage is over 10 volts, replace lamp.
- Projector Adjustment (Section 4.8.2.1)
- Shutter Calibration (Section 4.8.2.2)
- Aperture Calibration (Section 4.8.2.3)
- Color Wheel Calibration (Section 4.8.2.4)
- Focus Calibration (Section 4.8.2.7)

NOTE: *The Wedge Calibration (*Section *4.8.3.3) MUST be performed following any changes to the White Projector Intensity Calibration.*

Procedure

1) Set up the Soligor light meter on the *HFA II - i* and zero out the meter (Appendix A).

2) Set the light meter to `position 1`.

3) From the Main Calibration menu, select `INTENSITY`.

4) Set up the instrument as follows to calculate the foot-lamberts:

   a) From the Intensity Menu, select P Factors (See Appendix A.2.19) or selectP1, P2 and P3 enter the P1, P2 and P3 factors from your Soligor Meter. Select `P3B`, `P3Y` and `P3F` if your light meter has these factors, otherwise enter the BYP3 factor on your meter for P3B and enter the P3 factor for P3Y and P3F.
   b) Select `METER` and enter your light meter serial number.

5) Select PROJECTOR, then WHITE. Allow the projector lamp to warm up for 3 minutes before proceeding.

6) Position the light meter roughly on the projected spot, then maximize the reading by positioning the chinrest via the chinrest control switch. (First left/right, then up/down, then refine with left/right again.)

7) Divide 929 by the P1 meter factor on your light meter.

8) Using the pads on the screen, increase or decrease spot intensity until your DMM reads the closest to the result of the calculation done above. Try to set the spot intensity as close to 929 Ft-L as you can. (It must be between 888 – 973 Ft-L, otherwise the *after* projector lamp intensity evaluation will not be within tolerance.)

9) Select CALCULATOR, and enter the voltage reading displayed on your DMM via the ten-key pad and select [Enter]. The voltage reading and the calculated foot-lamberts will be displayed next to WHITE. Also displayed on the CRT screen is the tolerance for the bowl intensity calibration. If an asterisk (*) appears, this indicates that the value is out of tolerance.

10) STORE the result. (It may take up to 2 minutes to process and store the new calibration data. The instrument will 'beep' when the process is complete.)

11) Press DONE.

4.8.3.1.2 Blue

Purpose

This procedure ensures that the maximum brightness of the projected number V blue spot in the bowl is close to the optimum 3.01 Ft-L.

Special Tools/Equipment Required

- Soligor Light Meter Kit
- Digital Multimeter, Fluke 8060A or equivalent
- Bowl Shroud
- Small Flashlight

Prerequisites

Before performing blue projector intensity calibration, verify the following:

- Projection lamp filament voltage with lamp on. If voltage is over 10 volts, replace lamp.
- Projector Adjustment (Section 4.8.2.1)
- Shutter Calibration (Section 4.8.2.2)
- Aperture Calibration (Section 4.8.2.3)
- Color Wheel Calibration (Section 4.8.2.4)

- Focus Calibration (Section 4.8.2.7)
- White Projector Intensity Calibration (Section 4.8.3.1.1) (Required only if the Projector Lamp position was adjusted.)

NOTE: *Blue Correction Calibration (Section 4.8.3.4)* ***MUST*** *be performed following any changes to the Wedge Calibration or the Blue Projector Intensity Calibration.*

Procedure

1) Set up the Soligor light meter on the *HFA II - i* and zero out the meter (Appendix A).

2) Set the light meter to `position 3`.

3) From the Calibration main menu, select `INTENSITY`.

4) Set up the instrument as follows to calculate the foot-lamberts:

   a) From the Intensity Menu, select P Factors (See Appendix A.2.19) or selectP1, P2 and P3 enter the P1, P2 and P3 factors from your Soligor Meter. Select `P3B`, `P3Y` and `P3F` if your light meter has these factors, otherwise enter the BYP3 factor on your meter for P3B and enter the P3 factor for P3Y and P3F.
   b) Select `METER` and enter your light meter serial number.

   `C` Or you can use the Read P Factor floppy disk for this step.

5) Select `PROJECTOR`, then `BLUE`. Allow the projector lamp to warm up for 3 minutes before proceeding.

6) Position the light meter roughly on the projected spot, then maximize the reading by positioning the chinrest via the chinrest control switch. (First left/right, then up/down, then refine with left/right again.)

7) Divide 3.01 by the P3B meter factor on your light meter (or use BYP3 if your light meter does not have a P3B factor).

8) Using the pads on the screen, increase or decrease spot intensity until your DMM reads closest to the result of the above calculation. Try to set the spot intensity as close to 3.01 Ft-L as you can. (It must be between 2.87 – 3.15 Ft-L., otherwise the *after* blue projector intensity evaluation will not be within tolerance.)

9) Select `CALCULATOR`, and enter the voltage reading displayed on your DMM via the ten-key pad and select [Enter]. The voltage reading and the calculated foot-lamberts will be displayed next to BLUE. Also displayed is the tolerance for the bowl intensity calibration. If an asterisk (*) appears, this indicates that the value is out of tolerance.

10) Select `STORE`, then `DONE`. (It may take up to 2 minutes to process and store the new calibration data. The instrument will 'beep' when the process is complete.)

4.8.3.2 Bowl

4.8.3.2.1 White

Purpose

This procedure ensures that the brightness of the background illumination is close to the optimum 2.92 Ft-L.

Special Tools/Equipment Required

- Soligor Light Meter Kit
- Digital Multimeter, Fluke 8060A or equivalent
- Bowl Shroud
- Small Flashlight

Procedure

1) Set up the Soligor light meter on the *HFA II - i* and zero out the meter (Appendix A).

2) Set the light meter to `position 3`.

3) Position the light meter at a point approximately 2 inches up from the center fixation hole in the bowl.

4) From the Calibration main menu, select `INTENSITY`.

5) Set up the instrument as follows to calculate the foot-lamberts:

   a) From the Intensity Menu, select P Factors (See Appendix A.2.19) or selectP1, P2 and P3 enter the P1, P2 and P3 factors from your Soligor Meter. Select `P3B`, `P3Y` and `P3F` if your light meter has these factors, otherwise enter the BYP3 factor on your meter for P3B and enter the P3 factor for P3Y and P3F.
   b) Select `METER` and enter your light meter serial number.

   `C` Or you can use the Read P Factor floppy disk for this step.

6) Select `BOWL`, then `WHITE`. Allow the bowl lamps to warm up for at least 3 minutes before proceeding. Observe the DMM voltage reading for 15 seconds to see if the light output from the bowl lamps has stabilized.

7) Divide 2.92 by the P3F factor on your light meter (or use P3 if your light meter does not have a P3F factor).

8) Using the pads on the screen menu, increase or decrease background intensity until your DMM reads closest to the result of the calculation done above. Try to set the background intensity as close to 2.92 Ft-L as you can. (It must be between 2.72 – 3.13 Ft-L, otherwise the *after* evaluation of the bowl light intensity will not be within tolerance.)

9) Select CALCULATOR, and enter the voltage reading displayed on your DMM via the ten-key pad and select [Enter]. The voltage reading and the calculated foot-lamberts will be displayed next to WHITE. Also displayed on the CRT screen is the tolerance for the bowl intensity calibration. If an asterisk (*) appears, this indicates that the value is out of tolerance.

10) Select STORE, then DONE.

4.8.3.2.2 Yellow

Purpose

This procedure ensures that the brightness of the yellow background is close to the optimum 29.87 Ft-L.

Special Tools/Equipment Required

- Soligor Light Meter Kit
- Digital Multimeter, Fluke 8060A or equivalent
- Bowl Shroud
- Small Flashlight

Procedure

1) Set up the Soligor light meter on the *HFA II - i* and zero out the meter (Appendix A).

2) Set the light meter to position 3.

3) Position the light meter at a point approximately 2 inches up from the center fixation hole in the bowl.

4) From the Calibration main menu, select INTENSITY.

5) Set up the instrument as follows to calculate the foot-lamberts:

   a) From the Intensity Menu, select P Factors (See Appendix A.2.19) or selectP1, P2 and P3 enter the P1, P2 and P3 factors from your Soligor Meter. Select P3B, P3Y and P3F if your light meter has these factors, otherwise enter the BYP3 factor on your meter for P3B and enter the P3 factor for P3Y and P3F.
   b) Select METER and enter your light meter serial number.

   C Or you can use the Read P Factor floppy disk for this step.

6) Select BOWL, then YELLOW. Allow the yellow lamp to warm up for 3 minutes before proceeding. Observe the DMM voltage reading for 15 seconds to see if the light output from the yellow lamp has stabilized.

7) Divide 29.87 by the P3Y factor on your light meter (or use P3 if your light meter does not have a P3Y factor).

8) Using the pads on the screen menu, increase or decrease background intensity until your DMM reads closest to the result of the calculation done above. Try to set the background intensity as close to 29.87 Ft-L as you can. (It must be between 28.53 – 31.28 Ft-L., otherwise the *after* evaluation of the yellow bowl lamp intensity will not be within tolerance.)

9) Select CALCULATOR, and enter the voltage reading displayed on your DMM via the ten-key pad and select [Enter]. The voltage reading and the calculated foot-lamberts will be displayed next to YELLOW. Also displayed is the tolerance for the bowl intensity calibration. If an asterisk (*) appears, this indicates that the value is out of tolerance.

10) Select STORE, then DONE.

4.8.3.3 Wedge

Purpose

This procedure ensures that both wedges are properly calibrated for attenuation of the white stimulus light. Wedge calibration must be performed whenever white projector intensity calibration has been performed.

During the Wedge Calibration procedure, the clear opening on the color wheel is rotated into the light path such that a white stimulus is projected into the bowl. Each step position on the glass wedge and the film wedge is measured by the spot detector, and a resulting white stimulus table is stored on the hard drive and calibration floppy diskette.

> ***NOTE:*** *If the Wedge calibration is performed and the instrument is also equipped with the Blue-Yellow option, the Blue Correction calibration MUST be performed after performing the Wedge Calibration.*

Special Tools/Equipment Required

- Bowl Shroud
- Small Flashlight

Procedure

1) Setup: Room lights darkened; bowl shroud on.

2) From the Calibration main menu, select INTENSITY, then WEDGE, then CALIBRATE.

3) After 7 – 10 minutes the unit beeps to indicate the calibration is completed. Select STORE, then DONE.

C If the instrument is equipped with the Blue-Yellow option, proceed to Section 4.8.3.4, Blue Correction.
C If the instrument is *NOT* equipped the Blue-Yellow option, go to Section 4.8.1 and verify the after intensity values.

4.8.3.4 Blue Correction

Purpose

This procedure ensures that the wedges are properly calibrated for attenuation of the blue stimulus light. Blue Correction calibration must be performed whenever blue projector intensity calibration has been performed or the Wedge calibration has been performed.

During the Blue Correction calibration procedure, the blue filter on the color wheel is rotated into the light path such that a blue stimulus is reflected into thee detector via the mirror instead of being projected into the bowl. Each step position on the glass wedge and the film wedge is measured by the spot detector, compared to the white light calibration table and a resulting blue stimulus correction table is stored on the hard drive and calibration floppy diskette.

Special Tools/Equipment Required

- Tool Stand
- Mirror Tool
- Hand-Held Mirror
- Bowl Shroud

Prerequisites

Before performing Blue Correction, verify the following:

- Projection lamp filament voltage with lamp on. If voltage is over 10 volts, replace lamp.
- Projector Adjustment (Section 4.8.2.1)
- Shutter Calibration (Section 4.8.2.2)
- Aperture Calibration (Section 4.8.2.3)
- Color Wheel Calibration (Section 4.8.2.4)
- Focus Calibration (Section 4.8.2.7)
- White Projector Intensity Calibration (Section 4.8.3.1.1) (Required only if the Projector Lamp position was adjusted.)
- Blue Projector Intensity Calibration (Section 4.8.3.1.2)

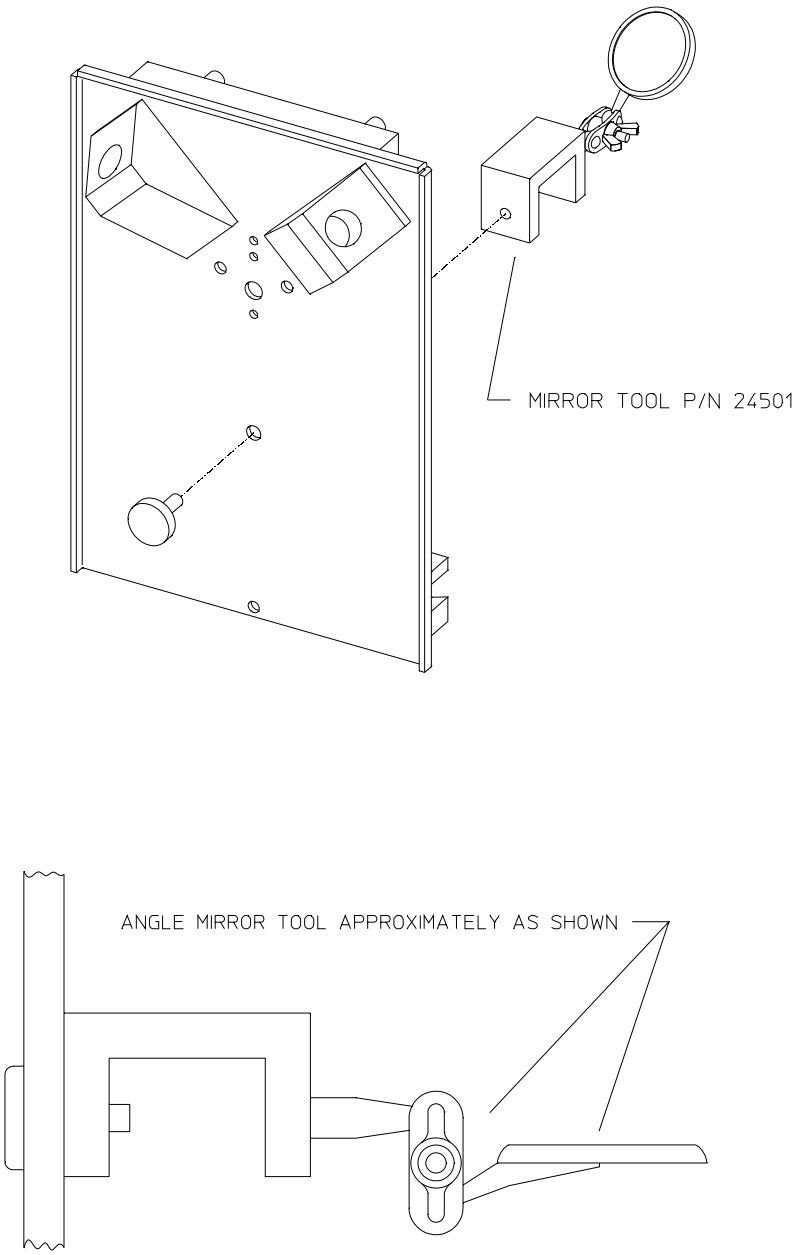

FIGURE 4-8. Tool Stand with Mirror Tool Attached

Procedure

1) Set up the tool stand with the mirror tool attached as shown in Figure 4-8. Manually adjust the mirror so that the mirror surface faces up (towards the top of the bowl) and extends outward as shown.

2) Raise the chin rest to its upper limit. The chin rest motor will stop (and make a buzzing sound) when it reaches its upper limit.

3) From the Calibration main menu, select `INTENSITY`, then `BLUE CORRECTION`.

4) Select `MIRROR CENTERING`. The turret and detector will be positioned so that they point downward. A message, *"Please Center Calibration Mirror"*, will be displayed on screen. (You will perform the mirror centering in step 6 of this procedure.)

5) Use a second small mirror (held in your left hand) to locate the image of the lower turret and detector housing, as shown in Figure 4-9.

6) Adjust the mirror tool (mounted on the chin rest) with your right hand, so that the reflected beam of blue light can be seen on the surface of the detector housing as observed with the hand held mirror. When the mirror tool is correctly centered (positioned), the blue light spot will be seen at some point on the detector housing, as shown in Figure 4-9.

   NOTE: *If you cannot locate the beam of blue light, place your hand between the lower turret and the mirror tool. You should be able to see the blue light on your hand. Once you have located the blue light, remove your hand and continue to adjust the mirror tool until the blue light can be seen on the detector housing.*

7) Once the mirror tool is correctly centered, place the bowl shroud over the *HFA II - i* and turn out the room lights. Ensure that the room is as dark as possible and that no stray light enters into the bowl. Select `OK`.

8) A message, *"Please wait, adjusting stimulus position..."* will be seen. The *HFA II - i* is adjusting the position of the turret so that the maximum amount of blue light can be sensed by the spot detector. This process takes about 20 seconds to complete. When complete, you will hear the shutter "tap" on the metal surface beneath the shutter and the instrument will return to the Blue-Yellow Initialization menu.

9) Select `BLUE INITIALIZATION`. A message, *"Warming up lamp"* will be displayed as well as a percent complete gauge. The process takes about 4-5 minutes, and when complete, the instrument will automatically proceed to the Blue-Yellow Initialization process.

   NOTE: *During the lamp warm up (or the Blue-Yellow Initialization process described below), if the room is not dark enough an error message and a beeping sound will prompt you to try again.*

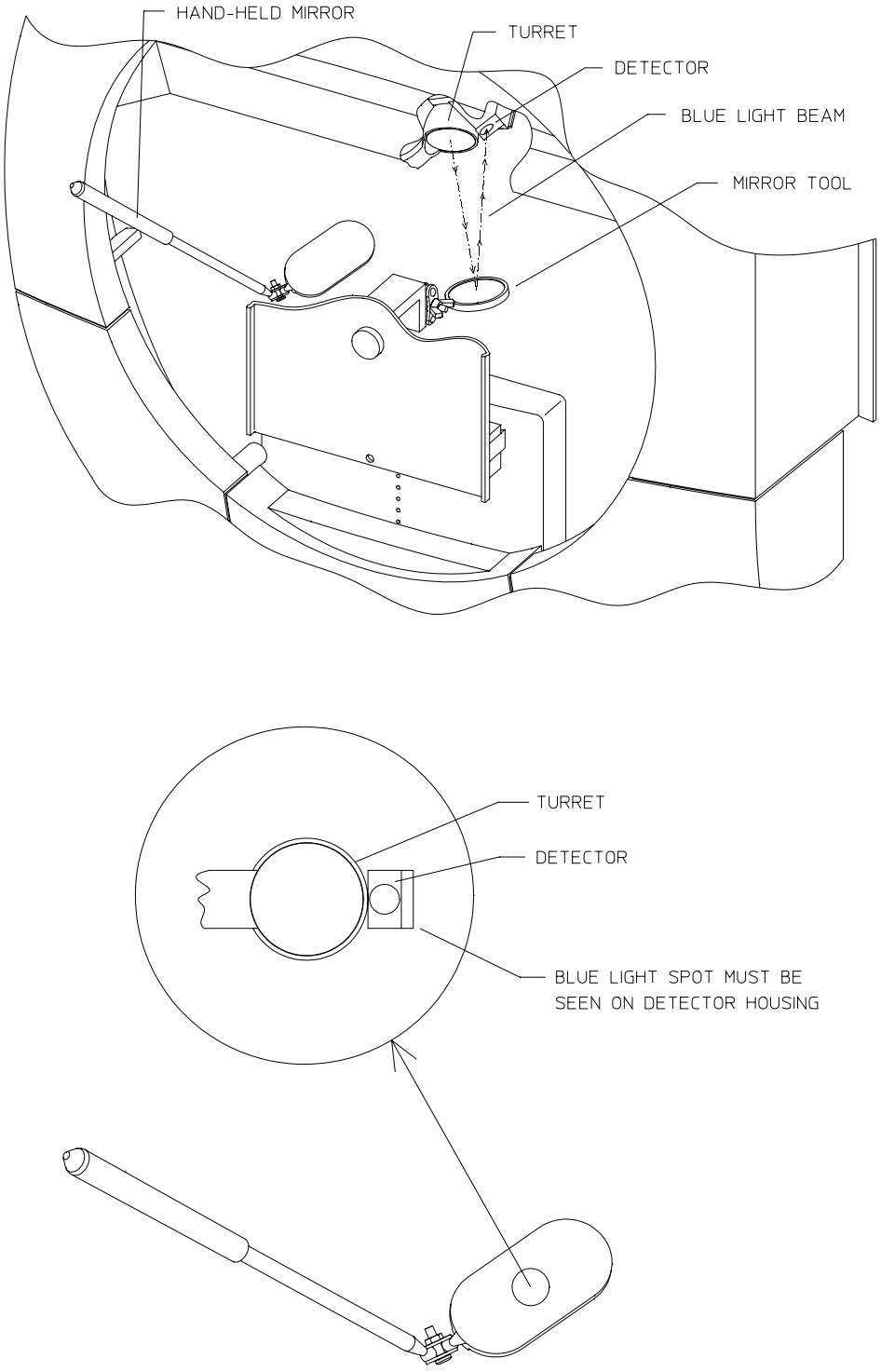

FIGURE 4-9. Locate Lower Turret and Blue Light on Spot Detector

10) During the Blue-Yellow Initialization process a percent complete gauge will be displayed on screen. The process takes about 4-5 minutes, and when complete, the message *"Blue-Yellow Initialization Successful"* will be displayed. When the message is displayed, select `OK`.

11) Select `DONE`.

4.8.4 Print Cal Values

Selecting *Print Cal Values* will print out the current settings stored on the hard drive. (NVM data), and also the film and glass wedge values. Refer to Appendix H for printout examples and interpretation instructions.

4.8.5 Miscellaneous

Miscellaneous is intended for use only by Manufacturing. Selection will display a ten-key pad. To return to the previous menu, select `Cancel`.

4.8.6 Camera

4.8.6.1 Camera Position / Size

Purpose

This procedure ensures that the video insert on the CRT is the correct size, and at the correct position.

Camera Position/Size (for all *HFA II - i* models)

Special Tools/Equipment Required

- Tool Stand
- Fake Eye
- Strip of Masking Tape

Prerequisites

1) Remove the front and rear covers (Sections 3.2 and 3.3); then reinstall the front cover.

2) Verify the trial lens holder alignment (Section 4.9.6).

3) Remove the height adaptor from the tool stand and attach the fake eye to the tool stand.

4) Mount the tool stand on the chinrest.

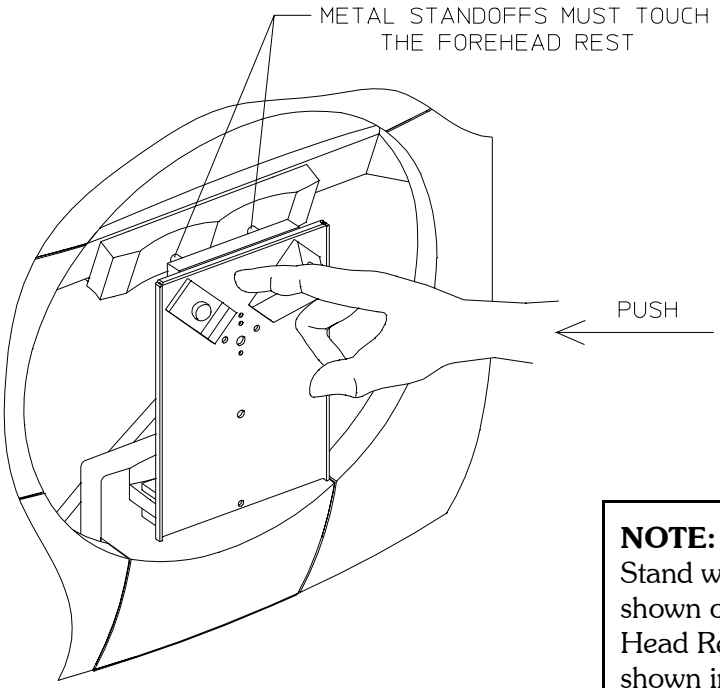

NOTE: Push the Tool Stand with your finger as shown or use the Fore-Head Rest Clip Tool as shown in the Appendix.

FIGURE 4-10. Proper Tool Stand Positioning

Pre-Setup (for all *HFA II - i* models)

1) Push the tool stand forward slightly on the chinrest so that the metal tips on the Tool Stand Alignment Adaptor make contact with the headrest (Figure 4-10). Then raise the trial lens holder and pull it forward. This is the position that the tool stand should be in when performing the procedure.

2) The right-angle extension on the fake eye assembly will press against the trial lens holder and position it correctly (Figure 4-11). (Set the chinrest height so that the right-angle extension touches the trial lens holder at about the 0 - 0 level on the trial lens holder scale.)

   NOTE: *Once you have the trial lens holder set, do not move it.*

3) From the Calibration main menu, select `Camera`, then `Position`, and then `Camera Monitor`.

4) By using the menus, move the trial lens holder image left or right, until the left outer edge of the trial lens holder image is touching the left edge of the video insert; then select `X-5` (5 more steps to the left), and `STORE`.

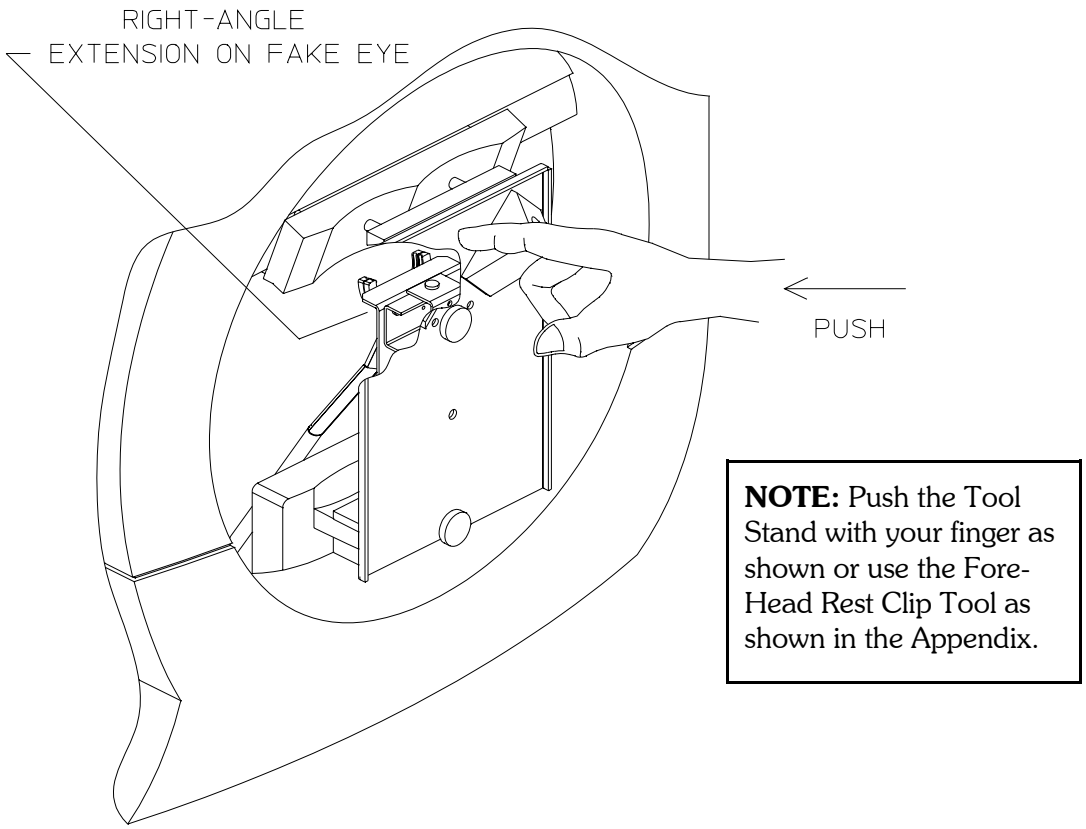

FIGURE 4-11. Trial Lens Holder Position

5) Select SIZE, and press the X-5 button until you get the smallest horizontal video picture and the system beeps twice. Press the X+5 button 11 times and STORE it. This step sets the horizontal width.

6) Press the Y+5 button until you get the smallest vertical video picture and the system beeps twice. Press the Y-5 button 9 times and STORE it. This step sets the vertical height.

7) Affix a piece of masking tape across the trial lens holder, with the top edge of the tape aligned on the 0 - 0 level of the scale on the trial lens holder (Figure 4-12). You can place a pencil mark on the top edge of the tape directly above the 90 degree reference point for an aid in setting the camera position as required in the following step. Reposition the trial lens holder against the right-angle extension on the fake eye assembly.

8) Select (camera) POSITION. Using the menus, move the trial lens holder image up or down, and left or right until the cross is just slightly below the centerline (top edge of the masking tape) of the trial lens holder and centered between the trial lens holder sides. Then select STORE.

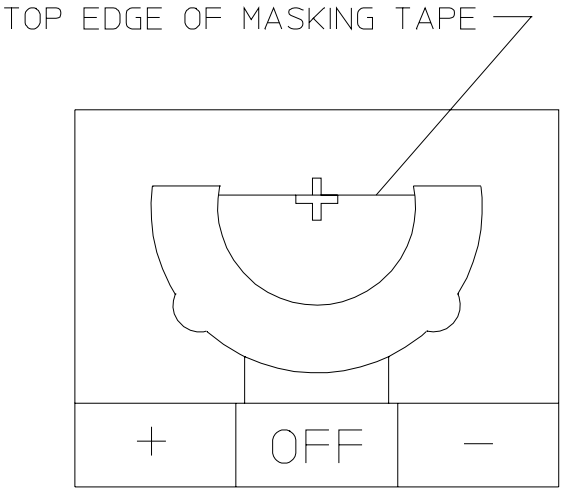

FIGURE 4.12 Camera Position/Size Calibration

9) To verify the picture size, you will need to view the camera image in a patient test. To do this: select DONE three times, press the Main Menu icon, select the CENTRAL 24-2 test, select right eye and then select PROCEED.

10) Verify that the picture insert does not extend into the circular test area. The picture size should be about 50 mm x 30 mm (2.0" x 1-3/16").

4.8.6.2 Gaze Position / Size

Purpose

This procedure (models 740*i* and 750*i* only) ensures that the gaze-tracking box of the video insert is the right size and is symmetrical around the center cross.

Note - *The 720i will display the gaze tracking box if the calibration menu is entered. It will appear in test modes also, but will not appear after the 720i has been restarted.*

Special Tools/Equipment Required

- Tool Stand
- Fake Eye

Prerequisites

1) Remove the front and rear covers (Section 3.2, 3.3); then reinstall the front cover.

2) Verify trial lens alignment (Section 4.9.6).

3) Verify camera position/size (Section 4.8.6.1).

Procedure

1) Install the fake eye on the tool stand and slide the tool stand onto the instrument chinrest. Push the tool stand forward slightly on the chinrest so that the metal tips on the Tool Stand Alignment Adaptor make contact with the headrest (Figure 4-2). This is the position the tool stand should be in when performing the procedure.

2) From the Calibration main menu, select `CAMERA`, then `POSITION`, then `GAZE MONITOR`.

3) Using the chinrest control switch, center the fake eye on the center cross in the video insert.

4) Using the pads on the menu, adjust the size and then the position of the gaze tracking box until it matches the upper left box scribe marks on the tool. Alternate between size and position until the adjustment is correct. Adjust the size of the Gaze Tracking box until it matches the remaining box scribe marks.

5) Select `STORE`, then `DONE`.

6) Check for the following values:
   WIDTH = 23
   HEIGHT = 15
   RATIO = 0.660

   If any of the values displayed are different, repeat the above calibration procedure to accurately size and position the gaze tracking box. When finished select `STORE`, then `DONE`.

4.8.6.3 Camera Intensity (for all *HFA II - i* models)

Purpose

This procedure ensures that the patient eye appears clearly illuminated in the camera video insert, and the trial lens IR LEDs are emitting proper output.

For models 720*i*, this procedure sets the reflex gaze LED, providing additional illumination to help differentiate the iris from pupil.

For models 740*i* and 750*i*, this procedure sets the brightness of the reflex gaze LED to properly monitor gaze tracking, and sets the brightness and balance of the trial lens LEDs.

Special Tools/Equipment Required

- Tool Stand
- Fake Eye

Prerequisites

Before performing IR LED intensity, check/adjust the following:

1) Trial Lens Holder Alignment (4.9.6)

2) Camera Focus (4.9.7)

3) Bowl IR LED/Mirror (4.9.8)

4) Perform the **Camera Position/Size Calibration** as previously described in this service bulletin.

Procedure

Models 720*i*

1) From the Calibration main menu, select *CAMERA INTENSITY*.

2) Set GAIN WITH LENS HOLDER to 35, and *STORE* it.

3) Set GAIN WITHOUT LENS HOLDER to 35, *STORE* it, and select *DONE*.

Models 740*i* and 750*i*

1) Dim the room lights and turn down the brightness on the CRT. (This greatly improves your ability to distinguish small differences in illumination in the CRT image.)

2) From the Calibration main menu, select, *CAMERA, INTENSITY*.

3) Install the fake eye on the tool stand, and slide the tool stand onto the instrument chinrest. Push the tool stand forward slightly on the chinrest so that the metal tips on the Tool Stand Alignment Adaptor make contact with the headrest (Figure. 4-10). This is the position the tool stand should be in when performing the procedure.

4) Raise and position the trial lens holder against the right angle bracket of the fake eye. The right-angle extension on the fake eye assembly will press against the trial lens holder and position it correctly (Figure 4-11). (Set the chinrest height so that the right-angle extension touches the trial lens holder at about the 0 - 0 level on the trial lens holder scale.) Verify that there is a central reflex indicating that the reflex LED in on.

   NOTE: *Once you have the trial lens holder set, do not move it.*

5) Center the fake eye to the cross in the video insert.

6) Select the REFLEX LED button on the right side of the screen.

7) Set the reflex count located to the right of the REFLEX LED button to 40.

8) Examine the reflex intensity value in the Intensity Reading column on the left side of the screen. If the reflex intensity is at 31 or higher, use the DOWN STEP buttons to reduce the intensity until the reflex intensity drops to 30. Now increase the gain using the UP STEP buttons (in small increments until the reflex intensity is again 31. If the reflex intensity is below 31 and the reflex count is at 40, use the UP STEP buttons to increase the reflex intensity until it just reaches 31 if possible. Do not allow the reflex count to exceed 100. A reflex intensity between 24-31 is acceptable. The higher values within the range are preferred.

9) Select ***STORE*** when the above conditions are set.

> ***NOTE:*** *The <35 count and information are not used in field calibration. They are for engineering use only.*

10) Examine the count for the >35 row of the Intensity Reading column for LEFT and RIGHT trial lens LEDs. The intensity readings for both should be between 100–200 and should be as close to each other as is possible.

11) If the readings are not in the acceptable range or are not close to each other , select LEFT LED and/or RIGHT LED and adjust using the UP STEP or DOWN STEP buttons. Repeat the checks until the trial lens LEDs are equally bright and intensity readings are between 100–200. The reflex intensity should remain between 24–31. If the reflex intensity has changed, repeat steps 6 and 7 above.

> ***NOTE:*** *When you adjust the brightness of one LED, the readings from the other LED also will be affected. Therefore, when you adjust one of the LEDs brighter, you may have to adjust the other one dimmer in order to get the readings of both within the desired range of 100–200.*

When the desired result is obtained, select ***STORE***.

4.9 Adjustments

4.9.1 Patient Support Horizontal Leadscrew Adjustment

Whenever possible, avoid loosening any of the screws that secure alignment of the forehead rest lead screw and leadscrew nut. The leadscrew and leadscrew nut must remain accurately aligned to avoid binding at any point in the range of travel of the nut on the leadscrew. The preferred means of adjusting tension of the long belt on the patient support assembly is to adjust the position of the patient support X-motor.

4.9.2 Belt Tension

Belt tension is adjusted by feel.

4.9.3 Edge Detector

Adjust the edge detector and/or flag to center the flag in the edge detector slot.

4.9.4 Touch Screen

Purpose

This procedure is designed to calibrate the touch screen well enough to enable error-free use of the Patient data entry menu. The calibration process entails iterations of verify-calibrate, verify-calibrate — until the touch screen response occurs within 1/8" of the point of contact at the four corners and center of the screen.

Special Tools/Equipment Required

- Pencil Eraser

Verification

Check/verify touch screen calibration in the following manner.

1) Go to any screen and, using the pencil eraser tip, touch the screen in the four corners and in the center. Observe how far away the screen response appears from the point of contact.

2)
   - If the screen response is **more than 1/8**" away from the point of contact:

     Proceed to the *Calibration Procedure* below and recalibrate the touch screen by "following the error". (For example: If the response of the touch screen at the left side of the CRT was leftward from the point of contact, then at the next touch screen calibration, you should touch the upper left corner further to the left than you did during the last touch screen calibration, i.e., *"follow the error"* — this is why it may take more than one cycle of verify-calibrate to achieve acceptable calibration.)

   - If the screen response is **within 1/8**" of the touch screen contact point, make a final check as follows:

     From the main menu, select `PATIENT` icon, then `PATIENT NAME`, and type in your name. Verify that the screen displays exactly what you typed (if so, touch screen calibration is adequate).

Calibration Procedure

NOTE: *Use the pencil eraser tip, or similar soft-ended implement, during this procedure.*

1) From the additional setup menu, select `Touch Screen Calibration`. If you are unable to access the additional setup menu, you can power-up the instrument while depressing the patient button until the touch screen calibration menu comes up. This will take approximately 2½ minutes.

2) Follow the instructions displayed on the screen.

   When you are instructed to press the rectangle in the Top Left Corner, note exactly where it is within the rectangle that you touch the screen. This will enable you to "follow the error," (as described above) if another attempt at calibration is necessary.

   NOTE: *press the rectangle only* ***once****; then* ***wait*** *for the screen to display the instruction to press the rectangle in the Bottom Left Corner.*

   When you touch the rectangle, again note exactly where you touch the screen.

4.9.5 CRT Adjustments

Special Tools / Equipment Required

- Plastic Slot-Tip Alignment Tool
- Operator Panel Extension/Support Tool
- Extension Cables
- CRT Overlay Template (refer to service bulletin HFA2-029)

WARNING: *During these adjustments you will be working closely around the back of the CRT with power applied. Work carefully to avoid the areas where the CRT high voltage is present.*

Procedures

NOTE: *Because some of the CRT adjustments interact, they should be performed in the order presented here.*

All of the CRT adjustment control pots are located on the CRT Driver PCB (Figure 4-13). The name of each pot is labeled on the PCB.

Preparation

- Switch ON the instrument and allow it to warm up to normal operating temperature (about 15 minutes).
- A transparency CRT overlay template is included in service bulletin HFA2-029(x). Cut the transparency with a scissor along the dark outer line. It will then just fit inside of the CRT bezel.

CRT Driver Board Adjustments

V SIZE (Vertical Size)

1) *With CRT overlay template:* Adjust the V SIZE pot so that the display image top and bottom edges match the top and bottom outline image on the overlay.

WIDTH (Horizontal Size)

2) *With CRT overlay template:* Adjust the WIDTH coil so that the display image's left and right edges match the left and right outline image on the overlay.

FOCUS

3) With the main menu still displayed, adjust the FOCUS pot for equal focus at the outer corners and center of the display.

BRIGHT (Brightness Control)

4) Set the EXTERNAL BRIGHTNESS pot to the maximum of its range.
5) Adjust the BRIGHT pot from minimum brightness towards the maximum brightness. The BRIGHT pot adjustment is correct when the white retrace lines are just visible.
6) Adjust the EXTERNAL BRIGHTNESS pot towards the minimum position until desired brightness is obtained.

CONT (Contrast)

7) Turn the CONT pot to minimum brightness (full counterclockwise) and then to maximum brightness (full clockwise), to determine the range of the pot. Adjust the CONT pot to its minimum, then turn the CONT pot clockwise about 1/3 of the total range. After adjusting contrast, it may be necessary to slightly readjust the BRIGHT pot.

V LIN (Vertical Linearity)

8) From a patient test, adjust the V LIN pot so that the circle encompassing the test points is circular and not egg shaped.

9) Remove the CRT overlay template and proceed to the Calibration and Diagnostics menu. Select the Video Test Pattern (Section 4.7) and perform any final adjustments using this on-screen display.

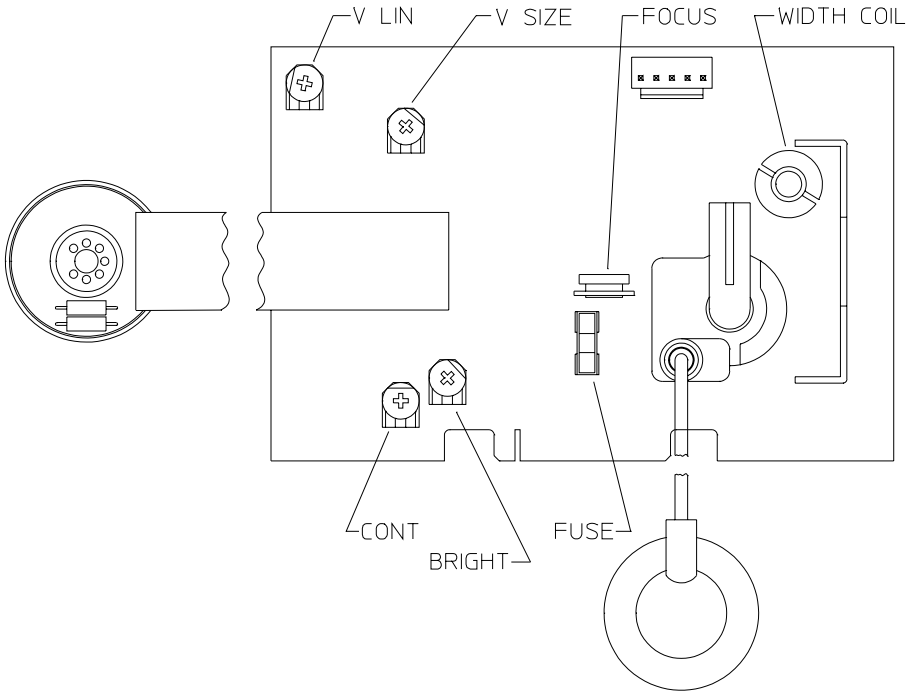

FIGURE 4-13. Z-Axis CRT Driver Board Adjustments

CRT Yoke Adjustments

WARNING: *During these adjustments you will be working closely around the back of the CRT with power applied. Work carefully to avoid the areas where the CRT high voltage is present.*

NOTE: *Use the operator panel extension/support tool and extender cables as required to gain access to the yoke and magnet adjustments.*

Yoke Rings

Adjustment of the yoke rings (Figure 4-14) should seldom, if ever, be necessary. Adjustment should be done only if needed to obtain small additional horizontal or vertical display movement after all other CRT adjustments have been made. Yoke ring adjustment does not affect size of the display image.

CRT Yoke

CRT yoke adjustment rotates the display image on the CRT screen.

1) Slightly loosen the clamp screw that secures the yoke to the neck of the CRT (Figure 4-14).

2) Gently rotate the yoke to square the display image within the bezel opening. The display image should not be rotated more than 1/16". Use the rows and columns of dots on the touch screen as a reference.

3) Tighten the clamp screw just enough to keep the yoke from moving (*DON'T OVER-TIGHTEN*).

CRT Yoke Magnets

NOTE: *Adjustment of the yoke magnets should be avoided if at all possible and should be attempted only after all other possible remedies have been tried!*

Each of these magnets (Figure 4-14) has a subtle effect on size and shape of the display image. Adjustment of the magnets is a process of trial and error, and becomes a difficult, time-consuming task. If the display is distorted, consider all other possible causes before attempting to adjust the yoke magnets.

Caution — *USE CAUTION WHEN HANDLING OR WORKING AROUND THE CRT YOKE TO AVOID MOVING ANY OF THE YOKE MAGNETS.*

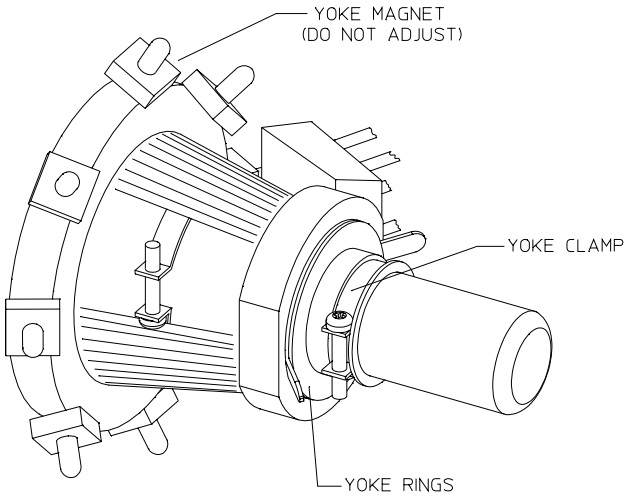

FIGURE 4-14. Z-Axis CRT Yoke Assembly

4.9.6 Trial Lens Holder

This procedure is used to align the trial lens holder. This must be done prior to aligning the camera or the gaze tracking system.

Special Tools / Equipment Required

- Tool Stand
- Trial Lens Holder Height Adaptor
- Zero Degree Trial Lens Alignment Adaptor (Black)
- C-clamp

Setup

1) Install the trial lens holder height adaptor and the chinrest mount on the bottom of the tool stand.

2) Remove the fake eye and install the trial lens alignment adaptor on the tool stand.

Procedure

1) Remove the front cover assembly (Section 3.2) and, using the C-clamp, clamp it securely in the upright position to a convenient work surface.

2) Mount the tool stand on the chinrest. Raise the chinrest (by manipulating the short belt inside the front cover) high enough to allow clearance of the height adaptor; then slide the chinrest mount over the chinrest. Push the mount onto the chinrest as far as it will go.

3) Center the chinrest by moving it left or right (manipulate the long belt). Use the edges of the chinrest and the molded lines on the front cover as visual reference (Figure 4-15).

4) Lower the chinrest until the height adaptor touches the front cover.

5) Manually lift the chinrest and tool stand slightly, and raise the trial lens holder into position below the tip of the trial lens alignment adaptor (Figure 4-16). Now lower the tool stand so that it again rests on the height adaptor.

   If properly aligned, the trial lens holder should encircle the tip of the alignment adaptor, with slight clearance all around (Figure 4-16).

6) Ensure that you have pushed the tool stand forward slightly on the chinrest so that the metal tips on the Tool Stand Alignment Adaptor make contact with the headrest (Figure 4-2). This is the position the tool stand should be in when performing the procedure.

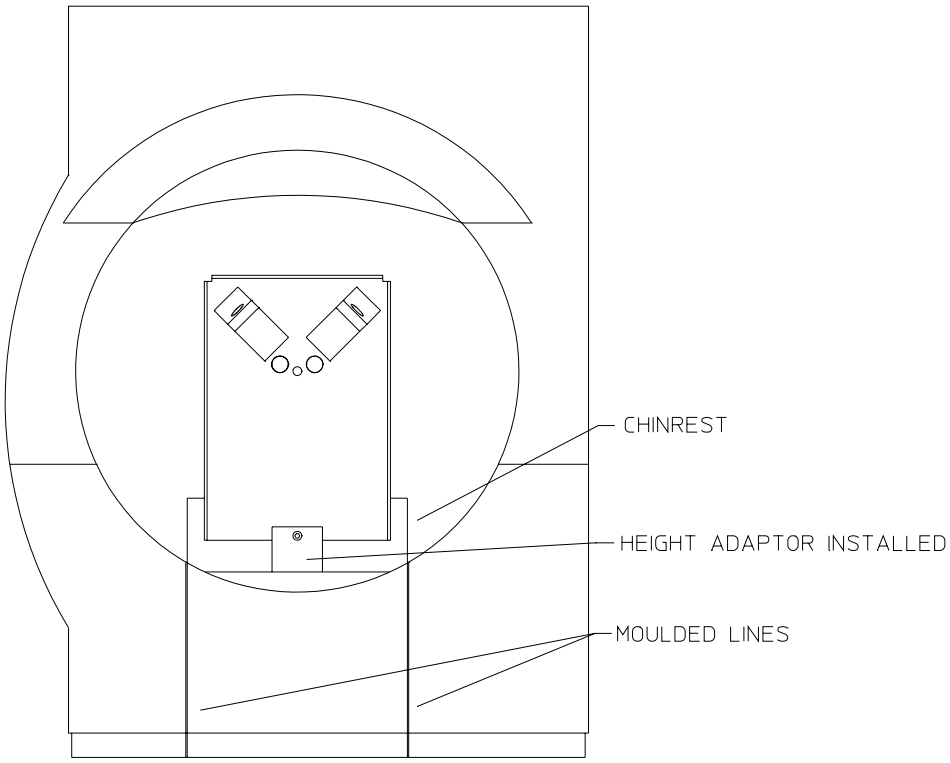

FIGURE 4-15. Chinrest Centered Relative to Front Cover

7) If the alignment is not correct, adjust the trial lens holder as follows:

   a) Check that the trial lens holder shaft rotates properly in the pivot block at the base of the shaft. If the stop screw at the base of the shaft (Figure 4-17) is screwed in too far, it will contact the top surface of the pivot block and impede rotation of the shaft.

   b) Loosen the two screws on the bottom of the shaft (Figure 4-17). This will allow up/down and left/right movement as necessary to obtain proper adjustment.

   c) With the trial lens holder positioned around the adaptor, retighten the screws. The trial lens holder should not put pressure against the alignment adaptor (Figure 4-16).

8) Check that the arm of the trial lens holder moves up and down smoothly in the slot of the trial lens trap. If necessary, the trial lens trap can be repositioned slightly by loosening the screw at each end of the trap.

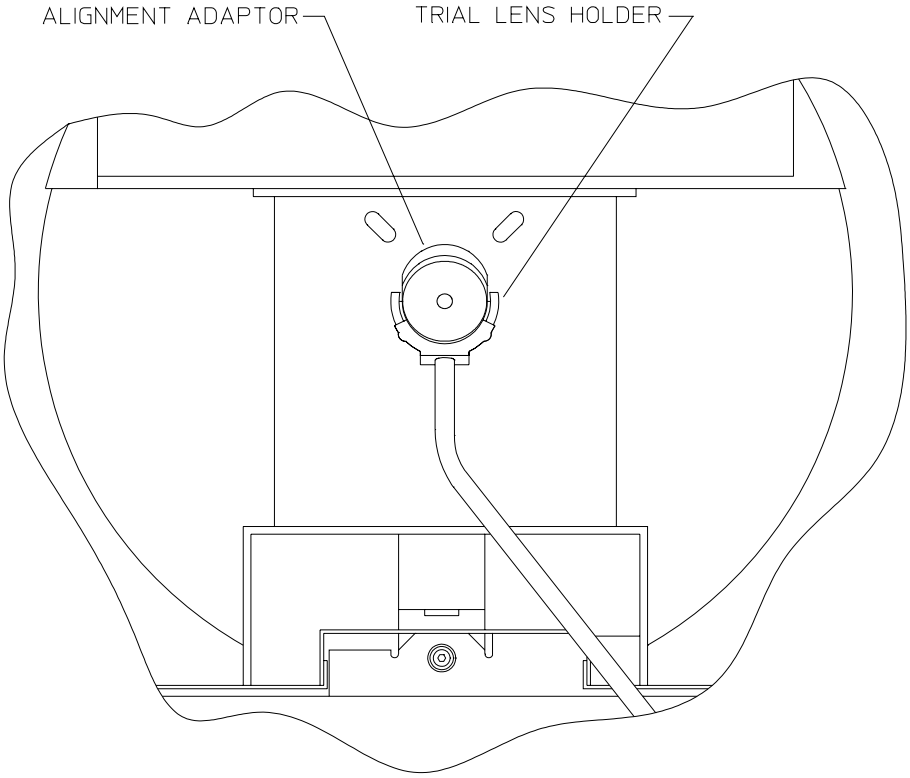

FIGURE 4-16. Trial Lens Holder Adjusted Relative to Alignment Adaptor

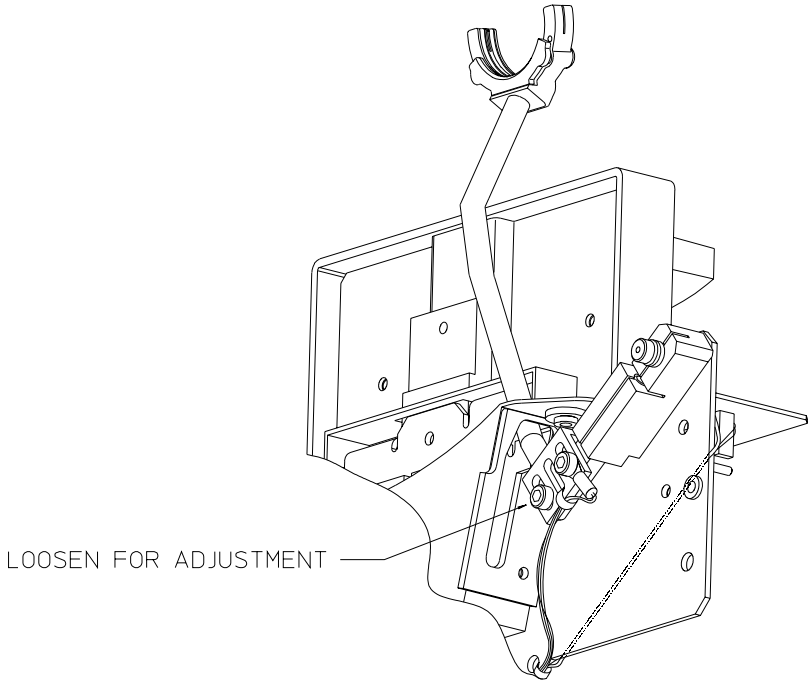

FIGURE 4-17. Trial Lens Holder Adjustment

4.9.7 Camera Focus

Purpose

This procedure adjusts the camera lens for optimum focus. It is not normally necessary to refocus the camera unless you have done replacements that affect the camera lens position (i.e., bowl replacement, fixation LED replacement, camera replacement).

Special Tools/Equipment Required

- Tool Stand
- Fake Eye with Camera Focus Target attached
- RTV

Prerequisites

Before starting Camera Focus, the following must be done:

1) Check/adjust the Trial Lens Holder (Section 4.9.6)

2) Check/adjust the Camera Position/Size (Sections 4.8.6.1 and 4.8.6.2).

Procedure

1) Install the tool stand on the instrument, with fake eye attached and height adaptor removed. Push the tool stand forward slightly on the chinrest so that the metal tips on the Tool Stand Alignment Adaptor make contact with the headrest (Figure 4-2). This is the position the tool stand should be in when performing the procedure.

2) From the Calibration main menu, select `CAMERA`, then `POSITION`.

3) Using the chinrest control switch, align the camera focus target in the video insert.

4) Gently rotate the camera lens manually and observe the focus target for best resolution obtainable. (You may need to use two fingers on opposite sides of the lens in order to rotate the lens without binding.)

5) Apply RTV at the point indicated in Figure 4-18 to secure the lens in position.

NOTE: *Squeeze the RTV onto a piece of waste paper and allow it to thicken slightly and become tacky before you apply it to the lens.*

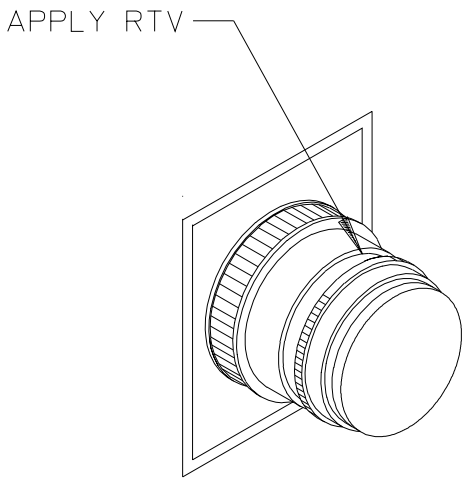

FIGURE 4-18. Applying RTV to Camera Lens

4.9.8 IR LED Alignments

Purpose

This procedure is used to align the Reflex LED and the Bowl IR LEDs.

Special Tools/Equipment Required

- Tool Stand
- Fake Eye

Prerequisites

Before starting IR LED Alignments, verify the following:

1) Check/adjust the trial lens holder (Section 4.9.6).

2) Check/adjust camera focus (Section 4.9.7).

3) Check/adjust camera size/position (Sections 4.8.6.1 and 4.8.6.2).

Reflex LED Alignment

Note - The Reflex LED Alignment must be performed whenever the Fixation PCB is removed or the camera mount is loosened from the bowl assembly.

1) Dim the room lights and turn down the brightness on the CRT (this greatly improves your ability to distinguish small differences in illumination in the CRT image).

2) From the Calibration Main Menu, select **Camera**, **Position**.

3) Install the Tool Stand with Fake Eye in the same manner as for camera intensity Cal.

4) Center the Fake Eye to the cross in the video insert.

5) Slightly loosen the two lower screws on the camera mount, you still want some pressure against the Reflex LED holder.

6) Move the Reflex LED using the Reflex LED holder until you center the circular LED pattern on the Fake Eye.

7) Tighten the screws of the camera mount and recheck to see if the adjustment was successful.

Bowl IR LED Assembly Alignment

Note - After replacement or adjustment of the IR LED assembly, camera intensity calibration must be performed.

1) Dim the room lights and turn down the brightness on the CRT (this greatly improves your ability to distinguish small differences in illumination in the CRT image).

2) From the Calibration Main Menu, select **Camera**, **Position**.

3) Install the Tool Stand with Fake Eye in the same manner as for camera intensity Cal.

4) Center the Fake Eye to the cross in the video insert.

5) Slightly loosen the screws holding the IR LED clamps.

6) Cover the cold mirror on the opposite side of the bowl with a small sticky note. Be careful that you do not touch the surface of the cold mirror.

7) Using the knurled portion of the IR LED assembly, adjust IR LED until you have the brightest image on the camera display. You will see four shadow spots in a diamond pattern from the IR LED assembly. You may not see all four spots on the display at one time. If possible, make sure that none of the spots are in the gaze box.

8) Tighten the IR LED clamps and recheck the camera image.

9) Repeat the procedure for the IR LED assembly on the opposite side of the bowl (as required).

(This page left intentionally blank)

Section 5 - Troubleshooting

Notes:

5.1 Introduction

The troubleshooting aids in this section provide the Field Service Engineer several aids for problem diagnostics of the *HFA II - i*. As Field and Repair Center experience identifies recurrent problems and appropriate diagnostic processes, the section will be expanded to include additional troubleshooting aids.

5.2 General Guidelines for Assembly Level Troubleshooting

On-site assembly level troubleshooting poses unique and complex challenges to the Field Service Engineer. In addition to identifying and replacing the faulty assembly, the Field Service Engineer must often travel great distances to the customer location, resolve operator errors, and identify power and environmental causes of problems while satisfying the customer's perception of quality service.

A structured approach to resolving field problems can greatly increase customer satisfaction and the Field Service Engineer's effectiveness. There are seven major tasks in resolving field equipment problems:

Prior to Going On-Site

1. Obtain a Service History for the Instrument
2. Query the Operator of the Instrument
3. Check for Field Service Bulletins that Address the Problem

While On-Site

4. Have the Operator Demonstrate the Problem
5. Resolve the Obvious
6. Substitute the Failing Assembly
7. Confirm the Repair

Each of these tasks is explained below.

Prior to Going On-Site:

1) ***Obtain a Service History for the Instrument.***

Knowledge of previous problems will assist your troubleshooting efforts. Find out when the last Preventive Maintenance (PM) service call was performed (if applicable). If a PM is due, or will be due shortly, be prepared to perform this task in addition to the repair.

2) ***Query the Operator of the Instrument.***

Get a description of the problem and inform the operator that you will need him/her to demonstrate the problem to you when you arrive. A description of the problem should include the symptoms displayed and also the type of problem. Determining the type of problem helps you establish your approach to solving the problem and confirming the repair. All problems can be broadly categorized into one of three types:

- **Solid Failure** - the problem presents itself continuously.
- **Intermittent Duplicable** - the problem is intermittent in nature. Usually a specific sequence of events reproduces the intermittent symptom, although occasionally these problems may be random in nature. By performing the proper sequence of events, the problem can usually be reproduced. If a sequence of events readily reproduces the problem, examination of this sequence of events may help identify the faulty assembly.
- **Intermittent Non-Duplicable** - the problem is intermittent, and all reasonable attempts at recreating the symptoms fail. These are the most difficult problems to resolve.

3) ***Check for Field Service Bulletins that Address the Problem.***

If a service bulletin addresses a resolution, be sure to take the necessary equipment to perform the changes.

While On-Site:

4) ***Have the Operator Demonstrate the Problem.***

This is very important. Before doing anything, always have the operator attempt to demonstrate the problem to you. By having the operator demonstrate the problem, you may solve the problem immediately, or avoid some incorrect assumptions. Having the operator demonstrate the problem will *ALWAYS* result in one of the following:

- **Reveal Operator Error** - You may immediately see that the cause of the problem is operator error. You then have the opportunity to train the customer in the proper use of the instrument, instead of spending time troubleshooting a nonexistent instrument problem.
- **Demonstrate specific problem sequence** - The operator will show you the specific sequence of events needed to reproduce the problem, reducing your diagnostic time.
- **Help Form Ideas** - The operator may not be able to duplicate the problem. However, the sequence of steps used to demonstrate the problem will give you ideas on how to pursue the problem in other ways. In this case you have the opportunity to explain to the customer the difficulty in resolving a nonduplicable problem.

5) ***Resolve the Obvious.***

Obvious mechanical or physical defects should be resolved when discovered. Often, resolving the obvious will lead you to the real problem.

6) ***Substitute the Failing Assembly.***

Once you have deduced which assembly is at fault, or is suspected to be at fault, it should be substituted with a known good assembly.

7) ***Confirm the Repair.***

After an assembly is replaced, confirmation should be made by reinstalling the failing assembly to witness the original symptom. You are then assured of the effectiveness of the repair, and of the need to utilize your spare assembly. Also, the number of *No Problem Found* PCBs returned to the Repair Center is greatly reduced.

Confirming the repair to the customer often helps to bolster confidence in your abilities. To avoid repeat service calls it is especially important to confirm intermittent problems. Time spent confirming a repair is time well spent.

Note - *If the problem still exists, reinstall the original assembly that you removed, then continue troubleshooting.*

Solving Solid Failures:

It is usually straightforward deductive logic or electrical checks that will lead you to replace the faulty assembly. After replacement of the assembly in question resolves the symptom, it is imperative that you *CONFIRM THE REPAIR* by reinstalling the original assembly and witnessing the original symptoms again. For many assemblies this is the only means of positively verifying that the replacement circuitry has resolved the problem.

Solving Intermittent Duplicable Failures:

These failures are resolved in the same manner as solid failures but always require more time to resolve and confirm. The frequency of the problem helps you determine how long it will take to verify a repair. A good rule of thumb when troubleshooting intermittent problems is: 2 times the frequency of the symptom gives an 80% confidence level of the repair.

EXAMPLE:

Problem: The problem appears only about once an hour. The sequence of events needed to reproduce the problem leads you to believe a circuit board is the likely cause.

Solution: The suspected circuit board is replaced. To provide an 80% confidence level that the circuit board resolved the problem, the instrument will need to be tested for 2 hours without failing.

Solving Intermittent Non-Duplicable Failures:

These failures present the greatest difficulty to the Field Service Engineer. The most effective means for resolving these types of problems requires careful thought and the utilization of all available resources that the Field Service Engineer possesses.

It is important that before replacing an assembly, good solid rationale for its replacement be developed and a backup plan devised in case replacement of the assembly does not affect the symptom. It is best NOT to replace any hardware until solid rationale for replacement is clearly evident.

Once an assembly is replaced by a Field Service Engineer, the customer's expectations are set for a hardware resolution to the problem. This can prove to be a handicap. A good sequence to follow for resolving intermittent non-duplicable problems is:

1) Analyze the service history in detail. Look for trends or the possibility of a previous repair inducing the problem.

2) Query the operator(s) at length for any other clues such as:
   - Times of failures;
   - More failures with certain operators.

3) Watch the operator set up and use the instrument.

4) Check all Field Service Bulletins.

5) Contact other Field Service Engineers involved in previous repairs.

6) Look at the operating environment - static, power, grounding, temperature or rate of temperature change, humidity, etc.

7) Contact your Technical Support Specialists.

8) Keep a record of everything you've done to solve the problem.

9) Document the customer service report. Record what you feel should happen if the problem returns. This will help a different Field Service Engineer in the resolution of the problem.

10) Give the customer a thorough update on the situation.

11) Educate the customer on logging pertinent information that may benefit a Field Service Engineer should the problem return. Often, engaging the customer in the pursuit of a solution emphasizes the difficulty of the situation. In some instances, the customer may welcome the feeling of being involved in resolution of the problem.

5.3 A Guide to *HFA II - i* Service Diagnostic Aids

The *HFA II - i* is equipped with several types of service diagnostic aids. These diagnostic aids are summarized below and detailed elsewhere within this manual.

■ Printouts and Identifiers

System Log - The System Log is a function in the software that keeps track of events that happen within the *HFA II - i* system. It may also prove invaluable to diagnosing intermittent problems, or symptoms that seem to worsen over time. Refer to Appendix J for more information on the System log.

Cal / Wedge Printout - The Cal / Wedge printout displays the state of calibration that the *HFA II - i* is in. More information on the Cal/Wedge printout can be found in Appendix H

Software Module Identifiers - Provides a list of three letter abbreviations that can appear on-screen or in the instrument system log. Use the list to help identify the error source and its possible solution. (Section 5.4)

■ Manual and Power-on Tests

Motor Exerciser and QA Test Points - Describes the various exerciser and QA tests that can be executed. (Section 5.5)

Printer Self Test - Provides descriptions of the Printrex error conditions, and how to perform a printer self test. (Section 5.6)

Power - On Self Tests - Describes the sequence of events that the motor driver board initiates during the instrument power on phase. (Section 5.7)

■ Error Messages

Startup State Errors - Provides a list of possible Startup State Errors that may appear on-screen or in the system log. The motor driver board generates these errors during the instrument power on phase. Use the list to help identify the error source and its possible solution. (Section 5.8)

Hexadecimal Error Codes - Provides a table of hexadecimal errors that may appear on-screen or in the system log. Used properly, they can be valuable tools for fault isolation. The *HFA II - i* can generate thousands of error codes. To better manage this overwhelming amount of information, you will find only the error code number ranges detailed in Section 5.9.

Common Errors - Provides a table of the most common error messages and their solutions. (Section 5.10)

5.4 Software Module Identifiers

Often, a Module ID will be displayed in association with a displayed error message. The Module ID identifies a particular block, or module, of software code. The three-letter Module ID will generally appear in a character string with several other characters.

Following is a glossary of the software module identifiers.

ERR ERROR-EXCEPTION utility
TIM TIMER
RAP ROOT task
SEC SW security utility
MBC Calibration menu
KBD Keyboard
TCH Touch screen
PSW Patient switch
UTL System Utilities
BSD Boot prom Service Duct
BPI Boot Prom Interface
PRC Print Charts
UT2 Unit test task #2
UT3 Unit test task #3
IPC Inter-process comm. utility
PDM Patient DB menu
PMM Patient DB maintenance menu
PDB Patient DB utility
MBI Motor Board Interface
MBP Motor Board physical driver
UT4 Unit test task #4
UT5 Unit test task #5
UT6 Unit test task #6
UT7 Unit test task #7
UT8 Unit test task #8
UT9 Unit test task #9
I I I Interrupt handlers from 0xe0 to 0xfe
TST Test utilities
DRA (Device) RAM disk
RIN Root task for Install application
ADM Administration menu
GWI Gateway input
DSE Serial port driver
BKP Backup/restore menu
FSY File System
PRS Print Spooler task
DEE EEprom driver
STP StatPac Module
DIO Standard c I/O Dev(stdin,stdout,stderr)
GUI Graphics User Interface
GAP Gui/App no-man's land
BGX Boot Graphics
FLA Flash
ATC AutoTouch - record/playback
ATS AutoTouch Service
HDX HFA-I disk transfer utility task
MMG Memory Manager - Smart Heap
UT0 Unit test task #0
UT1 Unit test task #1
GUI Graphics User Interface
GWO Gateway output
GHI Host-to-Graphics Interface
KER Kernel interface
APP Application menu Setup
DEV General Device support
INT Interrupt dispatch and support
HD initialization utility
UID User Interface daemon
DFC FD driver
PRM Print menu
PRT Printer Task
DPA Parallel port driver
CPM Custom test pattern menu
STC Static Test Control module
STM Static Test Module
KTM Kinetic Test Module
LOG Log utility
MAM Main Monikers
TDM Test and diagnostics menu
MFM Manufacturing menu

Note:
DB = Database
FD = Floppy Disk
HD = Hard Disk

5.5 *HFA II - i* Motor Exerciser and QA Test Points

The *HFA II - i* offers the ability to exercise or move motors individually or in combination. In addition, QA test points may be selected in either a manual or automatic sequence.

Motor Exerciser and QA Test Points

1) From the Calibration main menu, select VERIFICATION.

2) Select either EXERCISER or Q/A TESTS. (SPOT SIZE is not performed in the field. It is used in-house to verify the ratio between the hole sizes in the aperture wheel in relation to the amount of light from the bowl surface.)

3) From the menu presented, select the desired test parameters

Motor Exerciser Menu:

- Test Count - Used to select the number of motor iterations.
- Motor Rate - Used to select the motor speed.
- Projector On - Used to turn the projection lamp ON.
- Projector Off - Used to turn the projection lamp OFF.
- X,Y,F,I,J,S - Used to select individual motors.

  X = Horizontal
  Y = Vertical
  F = Focus or Carriage
  I = Film Wedge
  J = Glass Wedge
  S = Shutter

- 30 Degree Tests - Used to move all motors within the central 0 - 30 degree range.
- 60 Degree Tests - Used to move all motors within the peripheral 30 - 60 degree range.
- Mixed 30/60 Tests - Used to move all motors within the 0 - 60 degree range.
- Stop Test - Used to stop the exerciser mode currently chosen.
- Done - Used to exit the motor exerciser.
- Iteration Count (looks like "Errors Encountered in Iteration") - Keeps track of the number of iterations. Updated when the test is complete, error occurs, or Stop Test is selected.
- Errors Current - Keeps track of the current number of errors.
- Errors Total - Keeps track of the total number of errors encountered.
- The last three items above are error status indications. These are displayed in 6 columns, each column representing one of the sequence: **X Y F I J S**

Q/A Test Points Menu:

- Current Point - Not a selection, but a status window. Provides information as to the parameters of the currently selected test point.
- Auto Sequence - The *HFA II - i* will automatically advance through all test points. (To interrupt and terminate, press the patient response button and then select *Done*.
- Manual Sequencing - Each time the patient button is pressed, the test point will advance.
- Open Shutter - Opens the shutter.
- Close Shutter - Closes the shutter.
- Flash Shutter - Opens then closes the shutter.
- Initial Point - Presents a ten-key selection pop-up window. Allows a specific test point to be entered.
- Next Point - Advances the test point.
- Previous Point - Moves to the previous test point.
- Done - Returns to the Verification Menu.

5.6 Printrex Printer Self Test and Error Handling

5.6.1 Printer Self Test

To do the self test, place the printer in the local mode by pressing the Line/Local button. Then press and hold the Paper Advance button while pressing the Line/Local button to initiate the test. The buttons may be released once the test is started. In self test, the ERROR indicator turns ON and the printout shown in Figure 5-1 is generated.

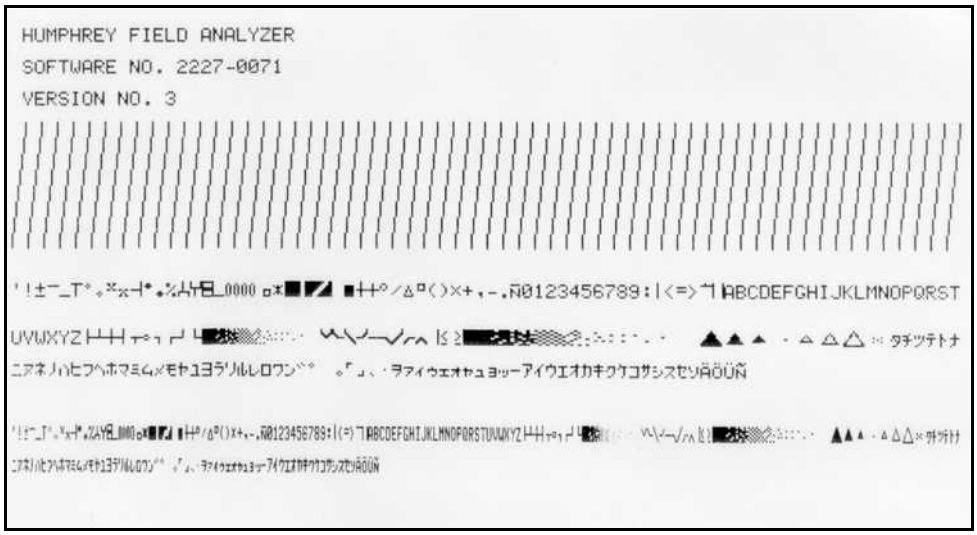

FIGURE 5-1. Self Test Printout

The self test printout continues until it is terminated by momentarily pressing the Paper Advance button again. After the self test, the printer remains in local mode until the Line/Local button is again pressed.

5.6.2 Printrex Printer Errors and Error Handling

The following conditions cause the front-panel ERROR indicator to light and fault signals to be sent to the host.

Paper Empty:

When the printer detects a paper-empty condition, it stops printing, goes off line, sets the Paper Empty line high, sets the Busy line high, sets the Fault line low and lights the ERROR indicator. Normal operation resumes when a new paper roll is installed.

Door Open:

When the door is opened (either latch unlocked), the printer stops printing, goes off line, sets the Fault Line low, sets the Busy line high, and flashes the ERROR indicator.

Overvoltage Error:

If the +24 Vdc input is too high (+27 volts or greater), the printer stops printing, sets the Fault line low, sets the Busy line high, flashes the ERROR indicator, and waits for the voltage to drop to operating levels.

Under Voltage:

If the +24 Vdc input is too low (+21 volts or less) for a period of 625 ms or more, the printer stops printing, sets the Fault line low, sets the Busy line high, flashes the ERROR indicator, and waits for the voltage to return to +22 volts or higher before resuming normal operation.

Over Temperature:

If the printhead temperature increases above a preset level, the printer runs slower than specified to allow it to cool, and returns to normal speed when the temperature reaches an acceptable level. If the printhead temperature exceeds operating levels, the printer stops printing, sets the Fault line low, sets the Busy line high, flashes the ERROR indicator, and waits for the temperature to drop to operating levels before resuming normal operation.

Brownout:

A brownout condition is defined as the +5 volt supply dropping below +4.5 volts. The printer goes into reset and all data in its buffers is lost if a brownout occurs.

5.7 Power-On Self Tests

5.7.1 Motor Driver Board Startup

The startup of the Motor Driver Board involves eighteen distinct operations, each of which must succeed before the Motor Driver Board is deemed to be operating successfully and capable of supporting clinical testing activity.

The Motor Driver Board startup sequence is outlined in the steps below. Recommended repair actions are described in Section 5.8.

Step 1 Resets Motor Driver Board

Sends NMI signal to Motor Driver Board, then waits until CTS is true. Bowl intensity is at maximum value.

Step 2 Gets ROM revision level

Checks the revision level to see whether loader or motor controller code is running, and to ascertain that it is at an appropriate level with the desired functional support.

Step 3 Gets ROM status

Reads the status of the Motor Driver Board ROM startup, to ascertain if the self-check succeeded.

Step 4 Resets motors

Brings all six motors to their respective flag crossings.

Step 5 Sets internal variables for operation.

Sets internal variables using a white stimulus against a white bowl.

Step 6 Initializes calibration constants

Data is read from NVM, and internal variables are populated. This includes offsets for the X, Y, F, and S motors, bowl and projector intensities, aperture wheel calibration values, gaze window location, eye monitor parameters, eye illumination parameters, and the gaze calibration parameters.

Note **-** all parameters have reasonable default values in case of initial power-up or un-calibrated system.

Step 7 Turns on the projection lamp to allow for lamp warmup.

Step 8 Sets bowl illumination to calibration value

Turns the bowl "on" to the specified calibration value (previously at full intensity).

Step 9 Initializes the DVM

Sets the DVM to internal bipolar mode, then initiates the hardware auto-cal sequence. Sets DVM to bipolar internal mode, then reads for zero value. Iterates until reasonable zero is attained.

Step 10 Zeros the DVM

Sets the DVM to external unipolar, then initiates the hardware auto-cal sequence. Sets DVM to (unipolar) detector mode, then reads for zero value. Iterates until reasonable zero is attained.

Step 11 Turns on the projection lamp as a secondary output check.

Step 12 Positions motors to bowl origin

Sets the X, Y, and F motors to point to the center of the bowl.

Step 13 Sets aperture wheels to clear, w/Goldmann V

Simultaneously moves both wheels to their maximum apertures.

Step 14 Turns projector on

The projector is turned on with the output voltage associated with its calibrated 10,000 asb level.

Step 15 Sets voltage level

The projector turret is positioned 35 degrees above center. The shutter is opened, with no attenuation, and intensity is read. The intensity is compared with the value established at calibration time. If there is a notable difference, the output voltage is adjusted until the intensity read is within a specified limit of the calibration value. The voltage drop across the projection lamp is then measured and used as a reference for future voltage adjustments. The shutter is then closed.

Step 16 Sets flash duration

The shutter is set to flash for a 200-millisecond duration.

Step 17 Verifies wedges

At 10 points on each wheel, the intensity is measured and compared against the value stored in memory. If any value is greater than 1 dB from the measured value, the test fails. If the RMS value for these readings is greater than 0.5 dB, the test fails.

Step 18 Turns off projector

The projector is turned off, but the background bowl lamps are left at their established values.

5.8 Startup State Errors

During the power-on sequence, the Motor Driver Board goes through 18 discrete operations, as indicated in **5.7.1 Motor Drive Board Startup** in the field service guide. If an error occurs, the following message(s) will be displayed:

"**System startup state ##**" where ## indicates the startup state number.

The startup state numbers are as follows:

0[1]	Motor board - reset failed
1[1]	Get ROM ID - mismatch of revision levels
2[1]	Get status - ROM selfcheck failed
3[1]	Resets motors - all motors failed to detect their flags
4[1]	Set motor flag params - motor or edge detector failed
5[1]	Set motor rates - motor did not respond properly
6[1]	Set white - internal variable for operation of white stimulus failed
7[1]	Projector on 1 - lamp warmup cycle failed
8[1]	Bowl on - bowl illumination failed to reach calibrated limit
9[3]	Initialize DVM
10[3]	Zero detector
11[2]	Projector on 2 - Projector lamp burned out or disconnected
12[1]	Position stimulus
13[1]	Set both wheels
14[3]	Set projector voltage - projector voltage exceeded 10 V, light path may be blocked
15[3]	Set flash duration
16[3]	Verify wedges
17[2]	Projector off

There will also be a suggested error recovery action to be taken by the operator. They are as follows:

All codes marked with [1] above will have the following message - "Please cycle power to restart"

All codes marked with [2] above will have the following message - "Please replace projection lamp and restart"

All codes marked with [3] above will have the following message - "Please dim room lights and press Retry"

Please note that an error code can be caused by a number of different things. For example, if there is a problem during the verification of the wedges, code 16, this could be caused by excessive room illumination, dirt on one of the wedges, dirt on the light detector, a broken glass wedge or defective electronics. All of the causes are indistinguishable from a software standpoint and the error message "Please dim the room lights and press Retry" is based on the expected cause of the error.

Note - *Additional errors may occur at the same time as the startup state errors, and are logged in the System log. Print out the System Log to check for additional errors.*

If the EEPROM should fail, there will be a message displayed as follows:

"HFA II may need service [code XXXXXX: 1>0x%AAAA 2>0x%BBBB]

Where AAAA will be replaced with a status code and BBBB is replaced with the index code.

Status Codes and their meanings are as follows:

190000	Bad Motor Value
190002	Bad Camera Value
190004	Bad Intensity Value
190006	Bad Read
190007	Bad Write

Index codes associated with Motor or Light values are:

0	Right Mode
1	Left Mode
2	Offset
3	Focus
4	Shutter
5	Aperture
6	Bowl
7	Projector
8	Yellow
9	Blue
10	Color

Index codes associated with Camera values are:

0	Illumination
1	Video Window
2	Gaze window
3	Gaze Parameters
4	Max Camera

Error messages will also appear in a small window in the upper right corner on the display. Status numbers, index numbers and an explanation of the error will be shown. These windows may be stacked on top of each other as the error develops. By touching the window, the error message on top will disappear, revealing the message under it (only from the Main Menu). To better see the error and to get a better idea of what may be causing it, print out the **System Log.**

Startup State Errors:

Note *- After any replacement/repair, refer to Section 3, Table 3-1 for followup actions.*

System startup state 0 - Indicates Motor Board Reset failed

Recommended Action:

- Cycle power to restart
- Replace motor driver PCB

System startup state 1 - Get ROM ID - there has been a mismatch of revision levels.

Recommended Action:

- Cycle power to restart
- Install the most current revision of software
- Replace motor driver PCB

System startup state 2 - Get Status - the ROM self-check failed

Recommended Action:

- Cycle power to restart
- Install the most current revision of software
- Replace motor driver PCB

System startup state 3 - Resets motors - All motors have failed to detect their flags

Recommended Action:

- Cycle power to restart
- Check System Log (Appendix J.3) for repetitive motor failures
- Visually inspect Motors, Flags, and Edge Detectors for misalignment. The Motor exerciser function can also be used to diagnose motor failures. Adjust as necessary. If failure cannot be traced to a particular Motor, flag, or detector check/replace motor driver PCB or connections.

System startup state 4 - Set motor flag parameters - a motor or edge detector have failed.

Recommended Action:

- Cycle power to restart
- Check System Log (Appendix J.3) for repetitive motor failures
- Visually inspect Motors, Flags, and Edge Detectors for misalignment. The Motor exerciser function can also be used to diagnose motor failures. Adjust as necessary.
- Refer to Common Error Messages (Section 5.10)
- If failure cannot be traced to a particular Motor, flag, or detector check/replace motor driver PCB or connections.

System startup state 5 - Set motor rates - A motor did not respond properly.

Recommended Action:

- Cycle power to restart
- Check System Log (Appendix J.3) for repetitive motor failures
- Visually inspect Motors, Flags, and Edge Detectors for misalignment. The Motor exerciser function can also be used to diagnose motor failures. Adjust as necessary.
- If failure cannot be traced to a particular Motor, flag, or detector check/replace motor driver PCB or connections.

System startup state 6 - Set white - The internal variable for the operation of the white stimulus on the white bowl have failed.

Recommended Action:

- Cycle power to restart
- Check/replace spot detector/cable
- Check/replace motor driver PCB

System startup state 7 - Projector on 1 - The projector lamp warmup cycle has failed.

Recommended Action:

- Cycle System Power
- Replace Projection Bulb
- Check projection path mechanical alignment
- Check/replace projector lamp cable
- Check/replace motor driver PCB

System startup state 8 - Bowl on - The bowl failed to reach its calibrated value.

Recommended Action:

- Cycle Power to restart.
- Perform Bowl Intensity Calibration
- Check/replace spot detector/cable
- Check EEPROM
- Check/replace bowl lamps (bowl lamps must be replaced in pairs only)
- Check/replace motor driver PCB

System startup state 9 - Initialize DVM - The built in Digital Voltmeter (Motor Board) failed
to initialize.

Recommended Action:

- Dim Room lights and Retry
- Check/replace spot detector/cable
- Refer to Common Error Messages (Section 5.10).
- Check/replace motor driver PCB

System startup state 10 - Zero detector - The built in Digital Voltmeter (Motor Board) failed to find a reasonable zero value.

Recommended Action:

- Dim room lights and retry.
- Refer to Common Error Messages (Section 5.10)
- Check/replace spot detector/cable
- Check projection path
- Check/replace motor driver PCB

System startup state 11 - Projector on 2 - The projector lamp is either burned out or disconnected.

Recommended Actions:

- Ensure the Lamp is plugged in correctly
- Replace the projection lamp and restart
- Check/replace projector lamp cable
- Check projection path mechanical alignment

System startup state 12 - Position Stimulus - Centering stimulus failed.

Recommended Action:

- Cycle Power to restart
- Perform Mechanical Calibrations
- Refer to Common Error Messages (Section 5.10)

System start up state 13 - Set both wheels - Wheels failed to move to their maximum aperture.

Recommended Action:

- Cycle power to restart
- Perform Wedge Calibration
- Check Film and Glass ND wheels
- Refer to Common Error Messages (Section 5.10)

System startup state 14 - Sets projector voltage - The projector voltage has exceeded 10V (Maximum limit)

Recommended Action:

- Dim room lights and retry
- Replace projection lamp
- Check projection path mechanical alignment
- Refer to Common Error Messages (Section 5.10)

System startup state 15 - Set flash duration - The shutter failed to provide the 200 ms flash
duration.

Recommended Action:

- Dim room lights and retry
- Perform shutter and wedge calibration. Check for mechanical interference.
- Check/replace shutter motor

System startup state 16 - Verify Wedges failed

Recommended Action:

- Dim room lights and retry
- Perform shutter and wedge calibration
- Check for broken, cracked, or very dirty green and/or blue filters in the detector assy. replace as necessary
- Check/replace ND Wheel

System startup state 17 - Projector off failed

Recommended Action:

- Replace projection lamp and restart
- Check/replace projection lamp cable
- Check projection path alignment
- Check/replace spot detector/cable

5.9 Hexadecimal Error Codes

Errors preceded by a '%' symbol, are generated by the Motor Board. These errors fall within two ranges: errors can indicate a fault with code received from the CPU, or a device that is controlled by the Motor Board or the Motor Board itself.

% 1 thru % 14 = Motor, Flag or Illumination Errors
%81 thru %93 = Flash Memory Loader Errors

Note - Error codes are listed in Hexadecimal format. If an error code begins with an 0xNNNNNN, disregard the 0x and look up only the NNNNNN in the table.

Hex. Error Codes Ranges	Error Module
000000-thru-000103	Operating System Error
002001-thru-002FOE	Patient Database Error
010001-thru018007	HFA2 Error Exception Utility Error
020000	Software Timer
030000-thru-030006	Root Task Error / Application Start-up
040000-thru-040005	Software Security Module
070000-thru-070020	Floppy Disk Driver (software)
080000-thru-080020	SCSI Device Error
0A0000-thru-0A0032	Printer Task Error
0B0000-thru-0B000C	Parallel Port Driver Error
0C0000-thru-0C0007	Inter-process Communication Utility Err.
0F0002-thru-0F2100	Patient Database Utility Error
110000-thru-11000A	Motorboard Physical Drive Error
120000-thru-120049	Motorboard Library Error
130000-thru-130009	Calibration Menu Error
140000-thru-140008	Keyboard Error
160000-thru-160005	Patient Switch Error
190000-thru-190034	Static Test Engine Error
1B0000-thru-1B0012	Service / Error Log Utility Error
200000-thru-200004	Gateway Input Error
210000-thru-210007	Serial Port Driver Error

Hex. Error Codes Ranges	Error Module
220000-thru-22001A	Backup / Restore Menu Error
230000-thru-20000B	File System Error
240000-thru-24000A	System Utility Function Error
250000-thru-25012D	Graphical User Interface Error
270000-thru-270014	CPU to Video Processor Error
290000-thru-290060	Application Software Error
2A0000-thru-2A0001 Error	General Device
2C0000-thru-2C0009 2D0000 2E0000	Boot Prom Error
300000-thru-310002	Test Utility Error
310000-thru-310002	Ram Disk Error
320000-thru-32000F	Installation Error
330000-thru-330007	Print Spooler Error
340000-thru-340004	EEPROM Device Driver Error
350002-thru-350307	StatPac Error
370000-thru-370002	GUI/APP No-Man's land Error
380000-thru-380002	Data Compression/Decompression Error
390000-thru-390004	Boot Graphics Error
3A0000-thru-3A0005	Flash Prom Interface Error
3D0000-thru-3D0009	HFA-1 Hard Disk Transfer Utility Error
3E0000	Memory Manager Error
3F0000-thru-3F0004	Keyboard Controller Interface Error
40000-and-400001	Processor Interrupt Error
410000-thru-41000b	Run-Time Loadable Module Error
880000-thru-890008	DST Service Tool Error

5.10 Common Error Messages

The table below provides the most common error messages, a description of the problem, and some possible solutions. Check each solution in the order given. After any replacement\repair procedure, ensure that you check Section 3, Table 3-1 for required follow-up actions.

ERROR MESSAGE	PROBLEM	SOLUTION
130009	A value stored within the EEPROM is out of tolerance.	1) Print out the Cal/Wedge printout. Look for the phrase "INVALID DATA" beneath NVM Data. Recalibrate as required. 2) If equipped with Blue-Yellow, recalibrate the Wedge calibration first, and then recalibrate the Blue Correction second.
Motor Board Uncalibrated (MBC Motor Board Controller)	A primary system error was reported during the power up sequence. A message, "Pressing Proceed Will Not Allow Testing" was displayed. The operator pressed proceed and then attempted to run a patient test.	Print out the System Log. Look at the log for Startup State "XX" Errors, where "XX" indicates a number. Refer to Sections 5.7 and 5.8 in this manual for description of each number.
Check Stepper Motor	The system software has detected a problem that does not fit into any system error message string. The software will default to the Check Stepper Motor message. It does not necessarily mean that there is a motor related problem.	Print out the System Log. There probably will not be any other errors, however, you should check to be sure. Often, this error is associated with the detector cable, the detector, its internal filters, or the light detection circuitry.

ERROR MESSAGE	PROBLEM	SOLUTION
Failure to Initialize DVM	The signal to initialize the DVM chip on the motor board did not occur. This message is usually accompanied with either a Start Up State 9 or 16 error message.	Print out the System Log. Verify that these errors are not occurring during system start up. If they are, ensure the room lights are dim during the start up period. This error will always occur if the front cover is off or if the black patch on the front cover has fallen off. Check the detector cable, detector, its internal filters, and the light detection circuitry.
Illegal Attenuation	The film wedge and the glass wedge do not provide enough light attenuation.	Print out the Cal\Wedge printout. Check the Wedge Attenuation value. It must be greater than 500. Try recalibrating the Wedges. If equipped with Blue-Yellow, recalibrate the Blue Correction after the Wedge calibration (see Error 130009). Check both the film wedge and glass wedge. Replace and recalibrate as required.
Unexpected Event	An event occurred which the system software and hardware could not properly process.	This is a very low level error involving the CPU. Normally, rebooting the instrument will restore functionality. It is not likely that an error will show in the System Log, however, it should be checked.
Check Stepper Motors, Shutter and Lamps	The projection lamp, yellow bowl lamp, or bowl lamps have degraded and have become unstable.	Printout the Cal\Wedge printout. Look at the Projection Lamp Voltage. If nearing 10 volts or below 7.8, replace the projection lamp. The yellow bowl lamp cannot be tested, and if suspect, should be replaced. The white bowl lamps should only be replaced in pairs.

ERROR MESSAGE	PROBLEM	SOLUTION
Any floppy or hard drive error message	May be a problem with the diskette, the drive, the cable, etc.	Refer to Appendix K.5 and K.6 for drive-related troubleshooting dialogues.
System Startup State 4, 12, 13, or 14.	The "I" (film wedge) and "J" (glass wedge) motors or associated assemblies are not operating properly.	Print out the system log. Normally, numerous other error messages indicating either the "I" or "J" wedge will be seen. Determine which wedge is causing the Startup State error. Check for any mechanical rotation problems. Verify that the wedge passes freely through the edge detector. Ensure that the film wedge is not slipping off the brass hub that it is mounted on. Check for any scoring marks on the wedge's opposing brass hub. If scoring marks are present, the pin on either wedge, aperture, or color wheel hub may be too long, causing them to be incorrectly positioned. Check the ease of rotation on the opposing wedge hub. Remove the aperture or color wheel as required to clean the shaft and bushing. Verify the functionality of the appropriate edge detector and motor. Check for proper alignment along the entire projection path.

ERROR MESSAGE	PROBLEM	SOLUTION
Printer is offline or is disconnected.	The HFA II was not able to communicate with the printer.	Ensure that the Printrex printer "green" power light is on. Check the printer power connection and the data cable. Reseat the both cables. Check for the proper printer selection in the System Set Up menu. Remove the paper carrier. Blow any paper debris from the IR LED hole in the lower right corner of the Printrex printer door opening. Reseat the paper carrier and paper as far to the right as possible. Perform the Printrex self test described in section 5.6 of this manual. As a final repair action, try another printer, then CPU PCB.

Section 6 - Diagrams

Note *- The diagrams in this Section support Level 1 Field Service requirements.*

Notes:

Note: Individual cables that have a part number listed on this drawing are available seperately by ordering the part number shown. Cables that do not have a part number listed on this drawing are available only as part of an associated assembly illustrated in Section 7, Parts.

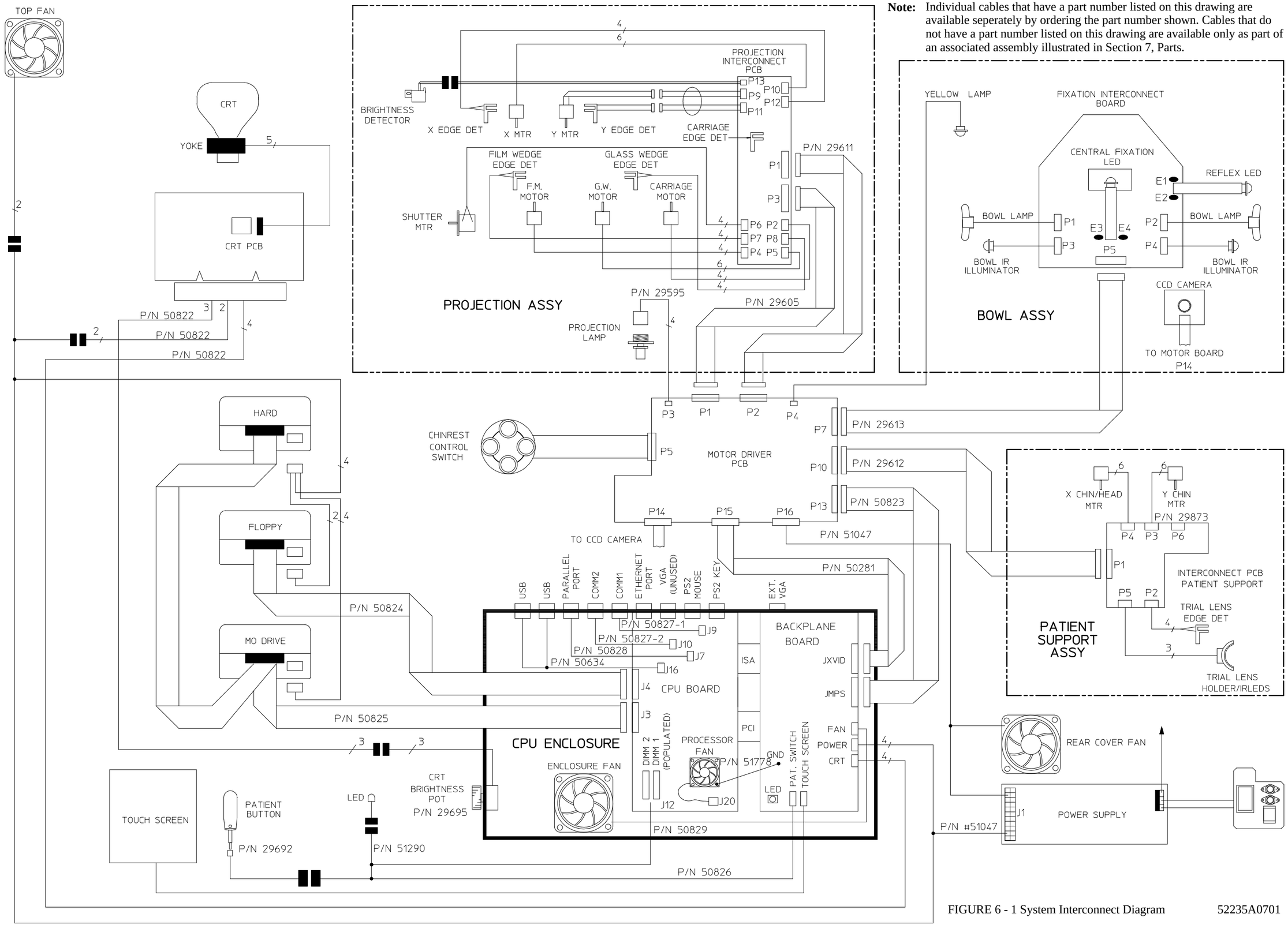

FIGURE 6 - 1 System Interconnect Diagram 52235A0701

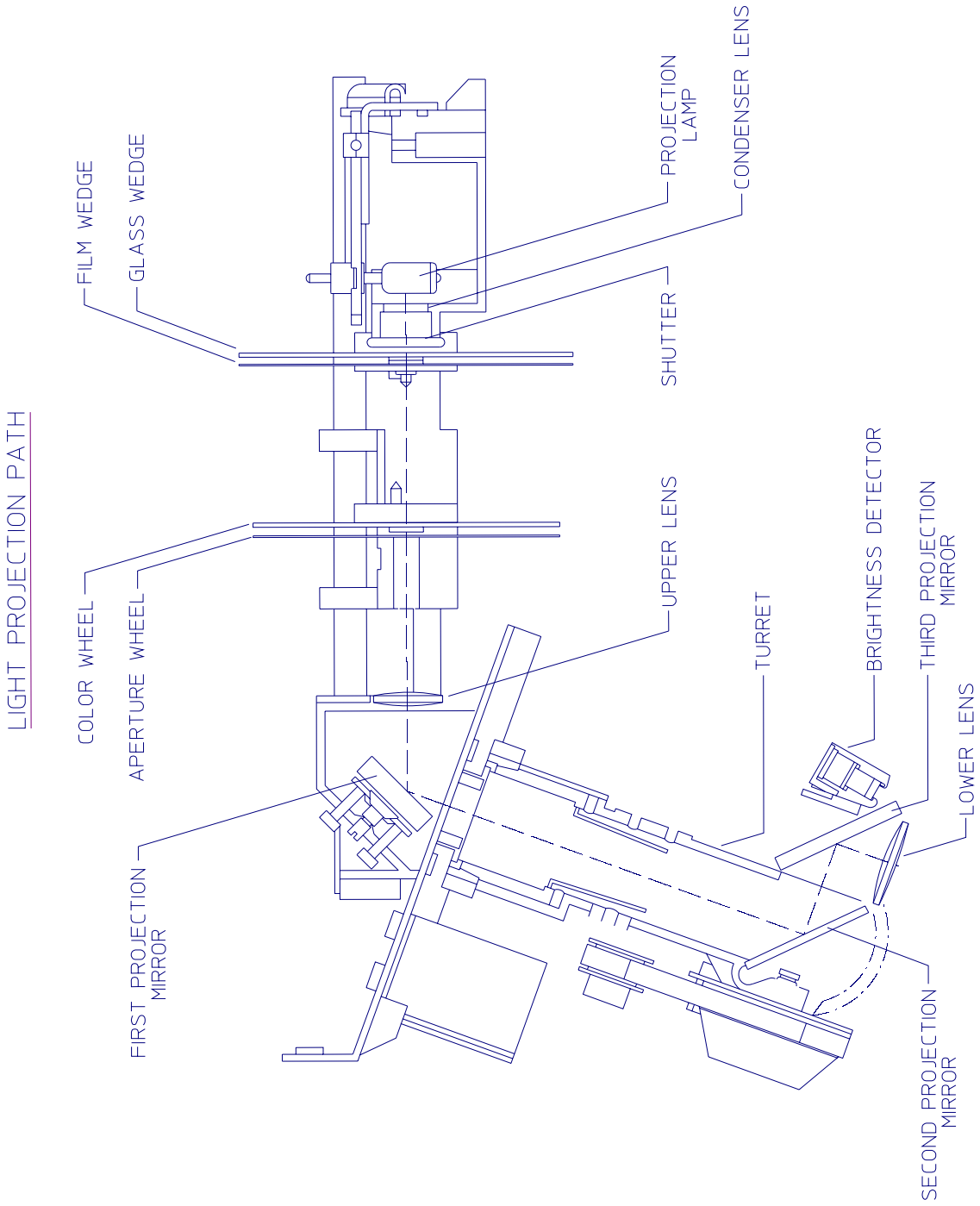

FIGURE 6 - 2. Projection Path

CPU PCB Functions and Connections

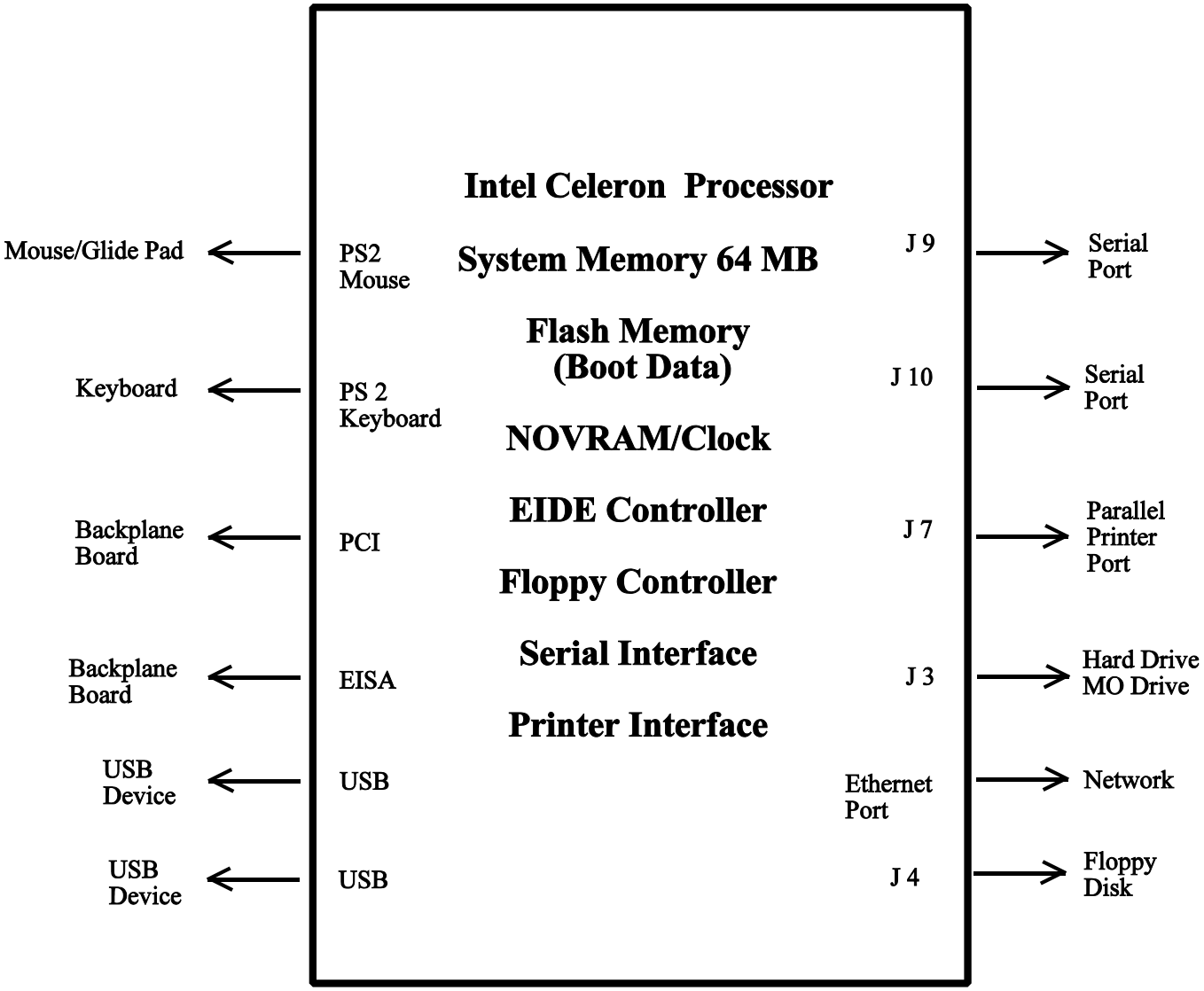

FIGURE 6-3. CPU PCB

Backplane PCB Functions and Connections

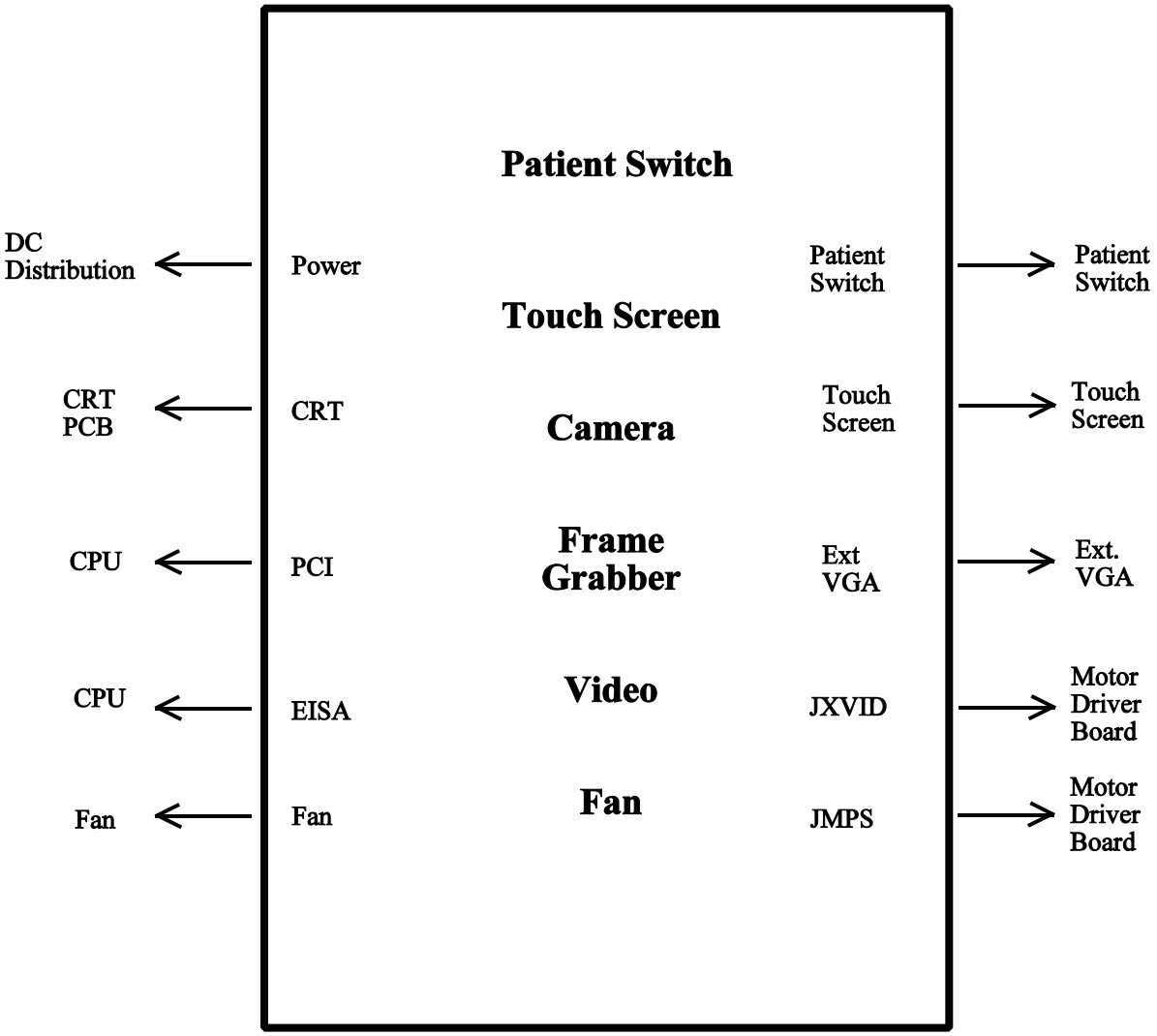

FIGURE 6-4. Backplane Board

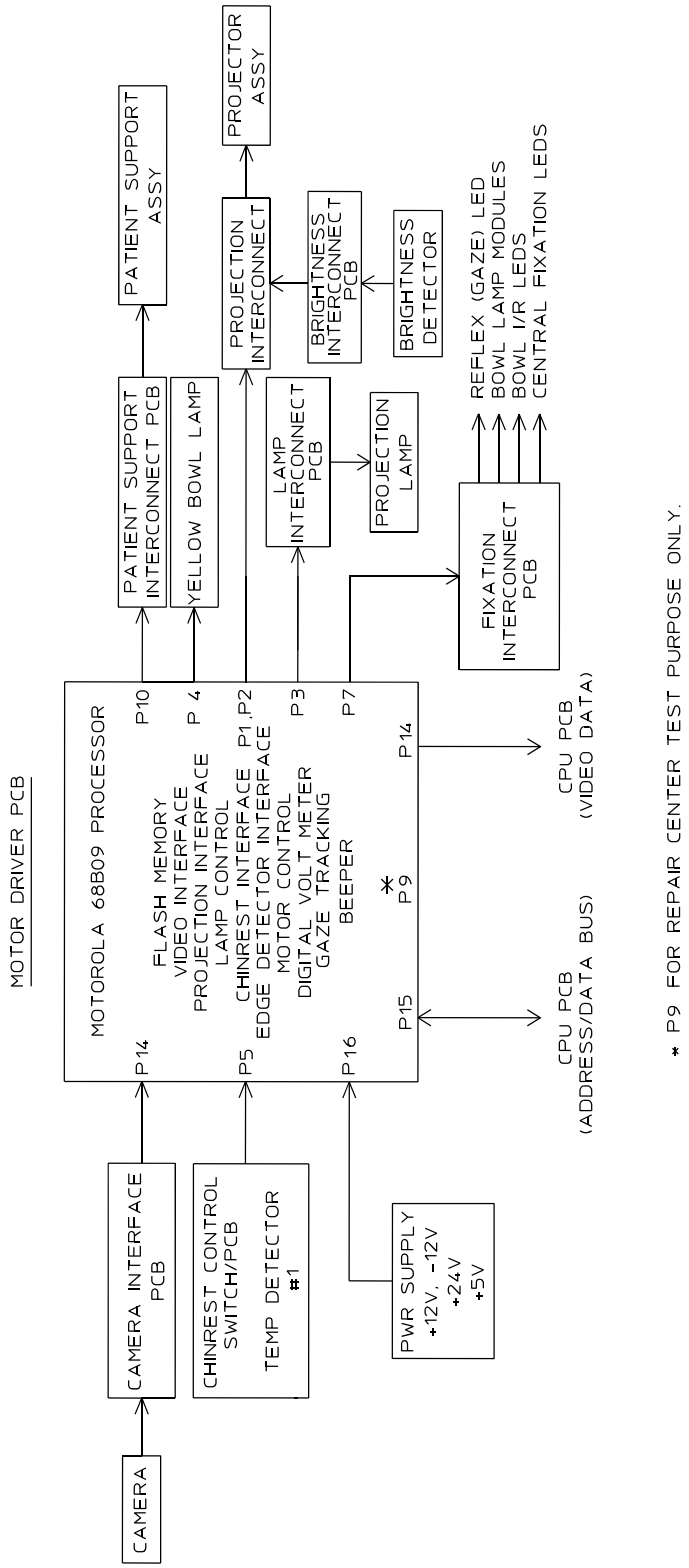

FIGURE 6-5. Motor Driver Board

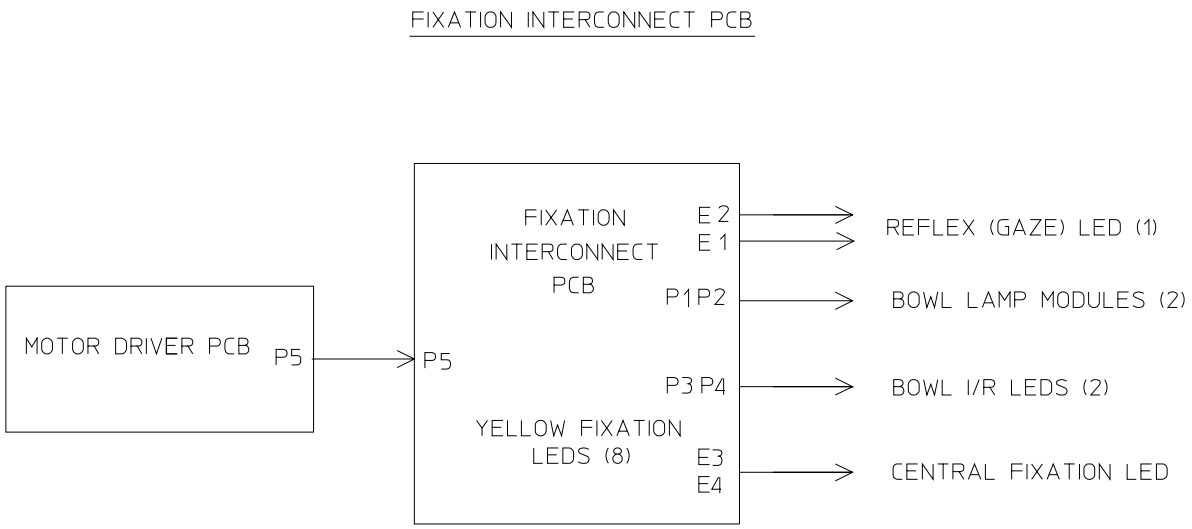

Figure 6-6. Fixation Interconnect PCB

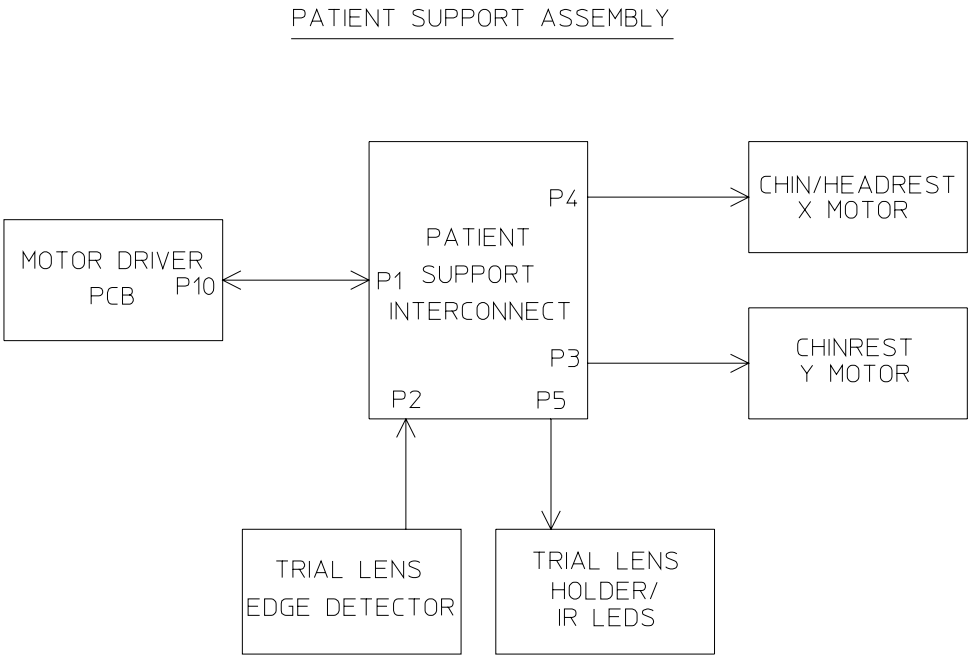

FIGURE 6-7. Patient Support Assembly

POWER ENTRY AND POWER SUPPLY

Note - *The switching power supply accepts AC power input voltages of 90 to 132/180 to 264 V AC. The fuse requirements are the same for all input voltages.*

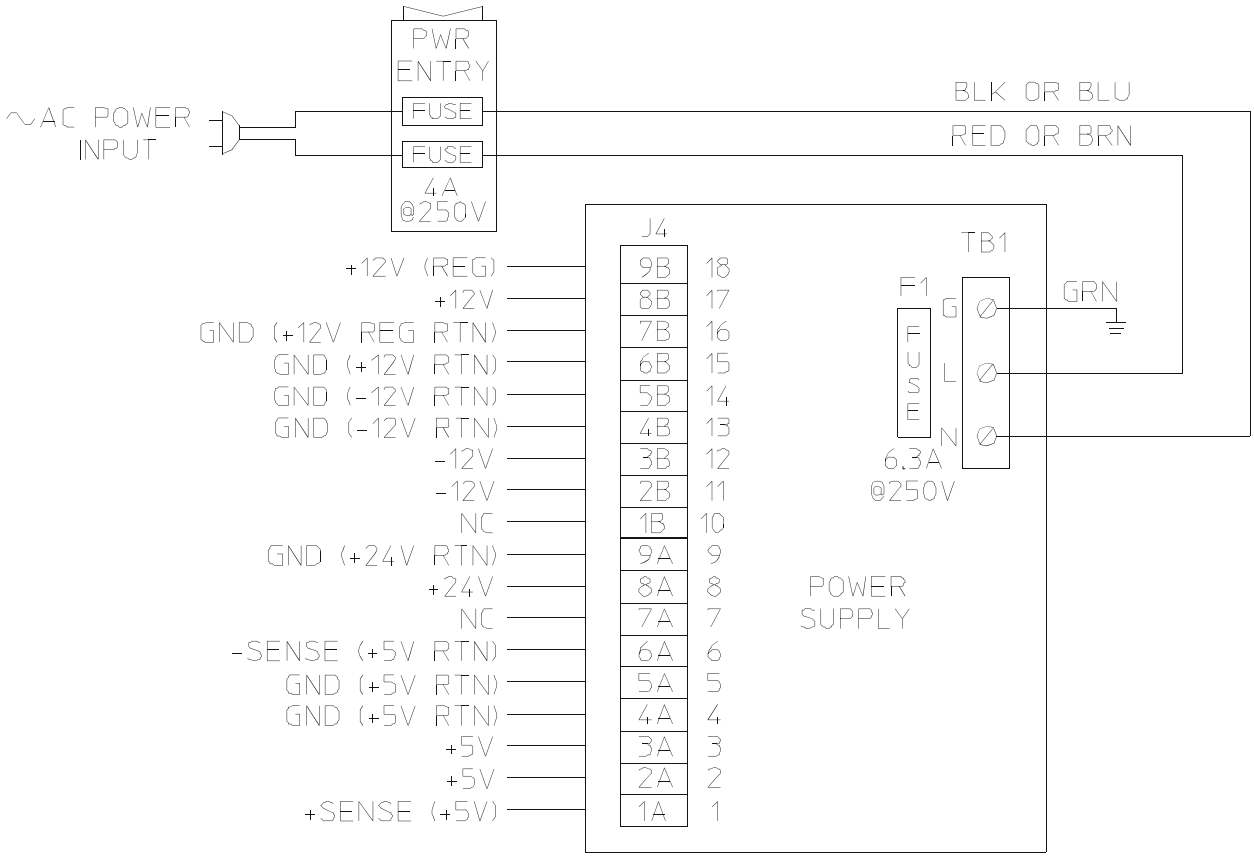

Notes:

1. Layout is shown as viewed from left side of instrument.
2. The HFA II Power Supply cannot be used in the HFA II-i.

DC VOLTAGE MEASUREMENTS

Voltage	Tolerances
+5 V	4.75 – 5.25
±12 V	±11.4 – 12.6
+24 V	22.8 – 25.2

FIGURE 6-8. Power Entry and Power Supply

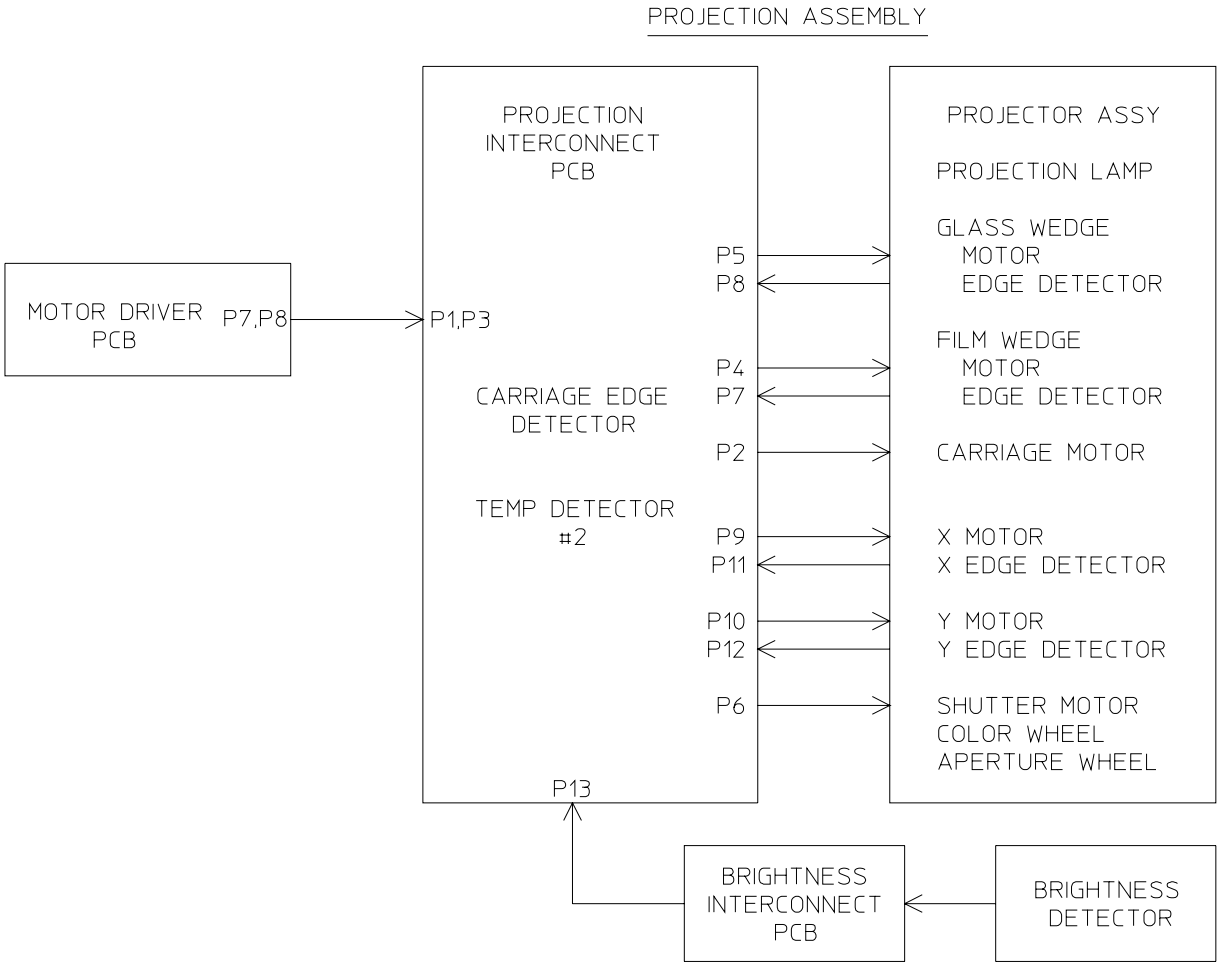

FIGURE 6-9. Projection Assembly

FIGURE 6-10. MEMORY MODULE AND DRIVES

NOTICE: *For current information regarding the memory module and drives, refer to HFA II - i Field Service Bulletin FA2i-003(x).*

CPU COMPONENT LOCATION

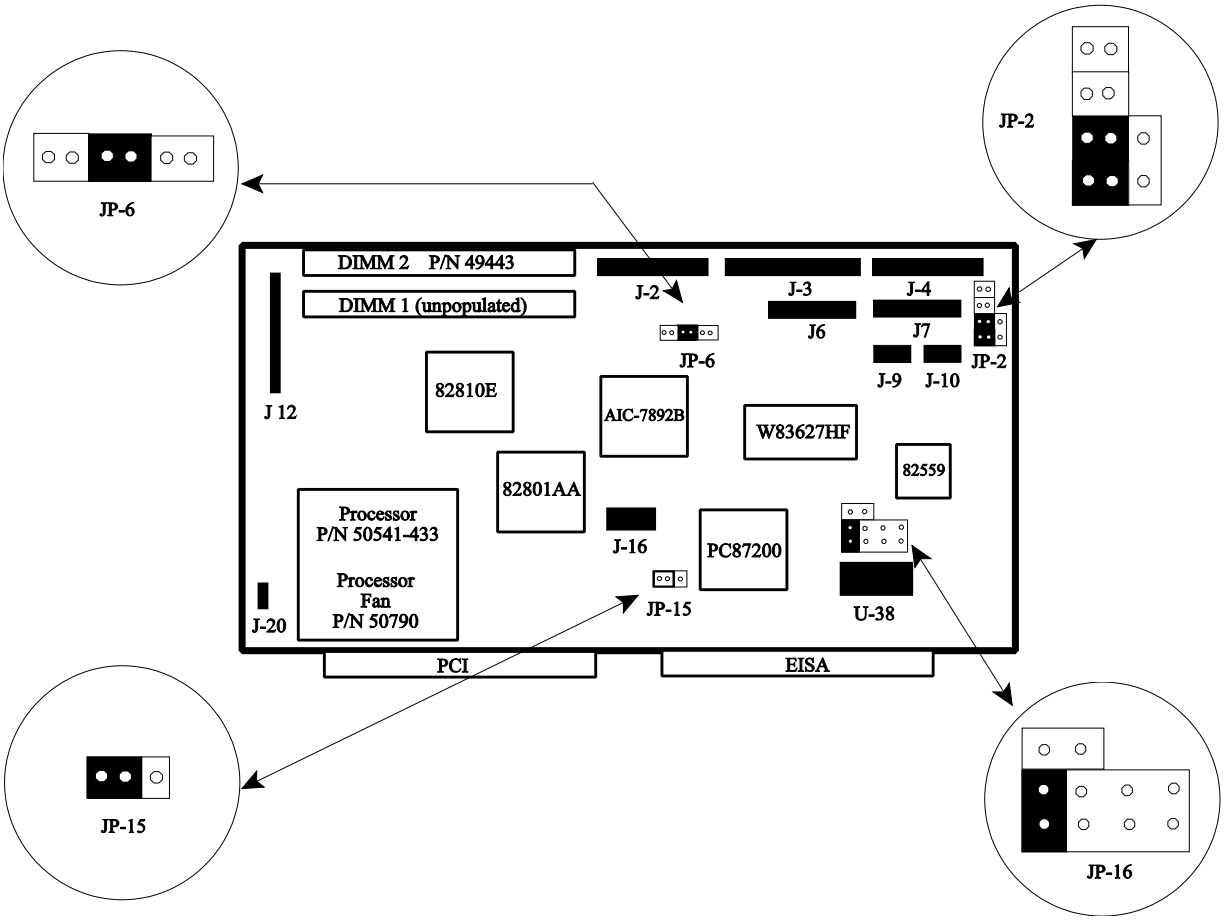

FIGURE 6-11. Component Locations – CPU PCB

Backplane Board

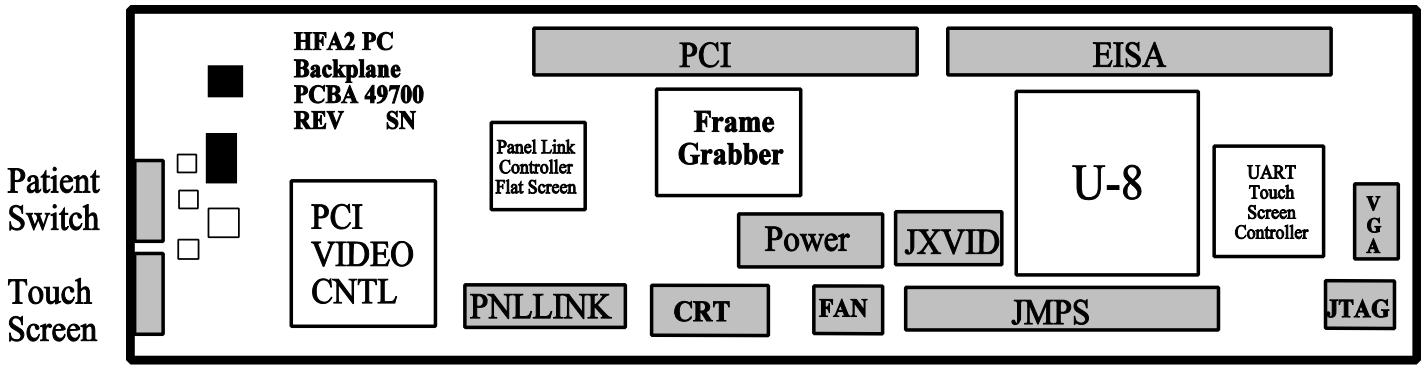

FIGURE 6-12. Component Locations – Backplane PCB

Section 7 - Parts

Notes:

7.1 Introduction

This section contains Level 1 parts lists and associated information for the *HFA II - i*. It contains instructions for ordering parts and returning defective parts, and it identifies the parts that are recommended as spares for supporting field repairs.

> *NOTE —* ***International Operations:*** *The procedure for returning defective parts from International operations differs somewhat from that for U.S. Domestic operations. These differences are noted in the instructions. Please follow the instructions carefully.*

7.2 Parts Orders — U.S. Domestic Service Operations

Spare parts may be ordered monthly or weekly by using the standard parts order form available from Service Parts Stores. Parts needed overnight can be ordered by phone from the Parts Department. The cost of shipping parts for next day delivery is very high and should be used only in emergencies.
The Parts Department phone number is (800) 341-6968.

Customers are billed for shipping charges (most items are shipped UPS).

7.3 Parts Orders — International Service Operations

For International Service Operations, please use the ordering procedures that have been established for your area of operations, and which meet the requirements of Carl Zeiss Meditec International Parts Department.

7.4 Returning Instruments / Defective Parts

When equipment needs to be returned to Carl Zeiss Meditec for repair, it is important that it is properly packed for shipment, and that authorization for return is obtained before the equipment is shipped.

> ***NOTICE —*** *Costs to repair equipment damage caused by improper packing for shipment to Carl Zeiss Meditec become the responsibility of the sender.*
> ***Do Not*** *store anything in the bowl when shipping the HFA II - i.*

7.4.1 Equipment Return Authorization

Authorization must be obtained from Carl Zeiss Meditec before equipment is returned for repair. A *Return Materials Authorization* (RMA) number is required on each return shipment to Carl Zeiss Meditec. The procedure for obtaining an RMA number varies, depending on your area of operation. Use the procedure that has been established by Carl Zeiss Meditec for your area of operations.

7.4.2 Packing the Instrument for Shipment

The shipping materials and repack instructions required for safe shipment of the *HFA II - i* are described in section 7.7.1 of this manual. A repack instruction sheet was also included with the instrument when first shipped from the factory.

7.4.3 Returning Defective Parts

The return of defective subassemblies is a very important part of our operation. Subassemblies are rebuilt and returned to service stock, and are available as needed by our Service Representatives. Our inventory is kept low to keep operating costs down.

When you return parts or assemblies to the Repair Center, attach a paper tag to each assembly. On the tag, list the following information:

- the serial number of the instrument from which the part was removed
- the date of removal
- the problem (if you could not find the problem, describe what the customer reported, and add "CND" - Can Not Duplicate)
- the part number of the part/assembly being returned
- your territory number (U.S. Domestic Field Service Engineers)

This information will enable the Repair Center to make repairs as efficiently as possible. (For U.S. Domestic Field Service Engineers, tags are available from the Parts Department.)

NOTE - International Operations: *Additional procedures are necessary for return of defective parts from international service operations. Instructions have been provided to each area of operation by the Carl Zeiss Meditec International Parts Department. If you are unfamiliar with the required procedure for your area, or have any questions regarding the procedure, please contact the Carl Zeiss Meditec International Parts Department.*

When you receive spare parts from the Parts Department, save the packaging material for returning the defective part for repair. Many of the parts are delicate and expensive; extra attention to packaging will pay off in less damage to parts during shipment.

7.5 Recommended Spares

Parts that are recommended as spares for the *HFA II - i* (small hardware not included) are marked with an asterisk (*) in the following parts lists. Quantities are not specified. Appropriate spares quantities are based on instrument population in your area, commonality of spare parts between instrument models, and experienced failure rate of parts.

The parts marked with an asterisk (*) are kept in stock and generally always available for immediate shipment as replacements. Any parts not in this list is subject to delays in delivery.

A quantity of 1 for each of these commonly-used parts may be used as a starting point for determining recommended spare quantities. Items and quantities may be added or deleted based on local experience and instrument population in your area.

Sparing of small hardware (screws, washers, etc.) is necessary, but is left to the discretion of the individual service engineer.

7.6 Level I Parts Lists

NOTE - *For part numbers of tools, test equipment and service supplies, please refer to Appendix A.*

7.6.1 Accessories/Supplies/Consumables

Part No.	Description
52524-1	Accessory kit (720i/740i), complete (comprised of some, but not all, of the parts listed below)
52524-2	Accessory kit (750i), complete (comprised of some, but not all, of the parts listed below)
* 51474	Magnetic Optical Diskette 640 MB Formatted
33905	Magnetic Optical Diskette 230 MB Formatted
* 48024	Diskette, 3½", 1.44 Mb Formatted (Box of 10)
29623	Padding, Chinrest (300 Pieces)
14176	Antistatic Wipes
24433	Paper, Thermal printer
* 08025	Eye Patch, Black, with elastic strap
33514-3	Wrench, Allen 3mm
* 30323	Projection Lamp Assy
* 29954	B/Y Lamp, (for blue/yellow feature), Halogen, w/Reflector, 12V, 20W
* 21453	Fuse, 4 Amp, Slow-Blow Metric, 250 volts, 100-120 volt units, (main line)
* 21455	Fuse, 2 Amp, Slow-Blow Metric, UL, 250 volts, 220 - 240 volt units, (main line)
* 46446	Fuse, 8 amp, SB, Metric, 125 volts, 100 - 120 volt units, (HPT4 Power Table)
* 50319	Fuse, 6.3 amp, SB, Metric, 220 - 240 V units, (HPT4 Power Table)
* 21455	Fuse, 2 Amp, SB, Metric, UL, 250 volts, 100 - 120 volt units, (Printex Printer)
* 32314	Fuse, 1.6 Amp, SB, Metric, UL, 250 volts, 220 - 240 volt units, (Printex Printer)
* 30241	Fuse, 6.3 Amp, Fast-Blow Metric, 250 volts (power supply)
* 30298	Fuse, 3 Amp, 250 volts, 2 AG (Z-Axis monitor)
* 29575	Patient Button Assy
51799	Dust Cover
* 42050	Power Cord, 90 LH, IEC 320, 6A 250V, 36 inches (HFA II - i to power table)
* 22511	Power Cord, Hospital Grade, (100–120V) (from power table to wall outlet)
* 22581	Power Cord, Euro, CEE 7/7, 10 A (220–240V) (from power table to wall outlet)
12978	Card, Doctor response
14180	Primer, Field Analyzer

	30301-33	Touchup paint (Light Gray)
	24083	Label, Accessory Kit Quality
	07696	Plastic Box (holds accessories)
	51467	Keyboard w/touchpad
	51112	Keyboard adapter, male DB9 to male mini DIN (PS2)
	30184	Foam Barrier Strip, 10.5" (Sticks onto table top, flush with CRT side of HFA II - i, to block loose objects on table from rolling under instrument.)
*	51680-1	Owner's Manual, English
	51680-2	Owner's Manual, French
	51680-3	Owner's Manual, German
	51680-4	Owner's Manual, Italian
	51680-7	Owner's Manual, Spanish
	24500	Warning Sheet, Thermal Paper
	51947	Packing List, Accessory Kit
	51940	Reorder Card, HFA II
	30236	Instruction Sheet, "*How to fasten HFA II - i to power table with printer*"
*	30132	Instruction Sheet, Repack, *HFA II - i*
	30151	Carrier, Paper, Thermal Printer
	40034	Caster, Non-locking
	40035	Caster, Locking

7.6.2 Software

Part No.	Description
52907	Revision C3 software diskettes for systems without MO (refer to the software timeline service bulletin for the latest part number information)
52944	Revision C3 software diskettes for systems with MO (refer to the software timeline service bulletin for the latest part number information)
52910	Revision C3 Diagnostic Support Tool Software diskettes for systems without MO (refer to the software timeline service bulletin for the latest part number information)
52945	Revision C3 Diagnostic Support Tool Software diskettes for systems with MO (refer to the software timeline service bulletin for the latest part number information)
52169	*HFA II - i series* HFA I Serial Transfer Diskette
52168	*HFA II - i series* HFA II Serial Transfer Diskette
53311	*HFA II - i series* Kinetic Upgrade Kit
n/a	Instruction Sheet (Refer to Appendix M in the *HFA II - i* Field Service Guide for information on installing software)

7.6.3 Peripherals

Part No.	Description
40038-115	Printer, 115 VAC, Printrex (mounts in power table) (horz data connector)
40038-230	Printer, 230 VAC, Printrex (mounts in power table) (horz data connector)
51472	Cable, Parallel, 48 inches, IEEE 1284, (DB-25 to 34 pin Centronics)
52416	Cable, Serial Transfer, HFA I to HFA II - i
52417	Cable, Serial Transfer, HFA II to HFA II - i

(* indicates recommended spares, as required)

7.7 Illustrated Parts Breakdown

The following drawings provide illustrated parts breakdowns of the *HFA II - i* instrument. The parts drawings are keyed by item numbers to the associated parts lists.

All dimensions are listed in inches unless noted otherwise.

> ***NOTE -*** *For individual cable part numbers, refer to the System Interconnect diagram in Section 6 (Figure 6-1). Cables that do not have a part number listed in Figure 6-1 are supplied only as part of an associated assembly shown in this parts section.*

7.7.1 Shipping Materials and Repack Instructions

Item	Part No.	Description
	30003	Packaging Assy, (includes items 1, 2, 3, 5, 6)
1	---	Pallet
2	---	Cardboard Bottom
3	---	Foam Base
4	---	HFA II - i
5	---	Foam Insert Top Right
6	---	Foam Insert Top Left
7	---	Accessory kit (see 7.6.1, Accessories, Supplies, Consumables)
8	---	Tube
9	08226	Strapping, Cord, Polyester, 1/2" wide (specify 26 ft length when ordering)
10	---	Cardboard Top
11	08228	Buckles, Strapping, 1/2" wide (2 required)
--	03554	Bag, Plastic 6" x 8"
--	30227	Turret Restraint Assy (rubber band with pull ribbon)
* --	30132	Instruction Sheet, Repack, HFA II - i

Power Table Shipping Materials (New Style)

---	40000	Box, Power Table without printer
---	39987	Box, Power Table with printer
---	40091	Box, Ship, 400 Power Table, Stand-up
---	39992	Box, Ship, 400 Power Table

HFA II - i Repacking Instructions

Caution — *The bowl is easily damaged if abused.* ***DO NOT*** *store anything inside the bowl. If the instrument is received with objects stored inside the bowl, your account will be charged for ensuing repairs.*

1) Disconnect the power cords and all peripherals from the *HFA II - i*.

2) Lock down the drive heads on floppy and Magnetic Optical drive using spare diskettes.

3) Pack the patient button, power cord, and all other accessories in the accessory box, if appropriate.

4) Put the trial lens holder in the down position.

5) Rotate the *HFA II - i* turret completely clockwise. To hold the turret in place:
   - loop one end of the rubber-band turret restraint around the end of the small turret pulley
   - pass the rubber band behind the turret and loop the other end around the left-hand bowl lamp baffle inside the bowl.

6) Remove the perforated cutout from the right side of the base foam insert (item 3).

7) Place the base foam insert inside the cardboard bottom on the pallet (items 1 & 2).

8) Place the *HFA II - i* (item 4) in the base as indicated on the drawing.

9) Remove the perforated cutout from the right side of the right top foam insert (item 6).

10) Orient the top right and top left foam inserts to conform with the surface of the field analyzer contours.

11) If you are shipping the keyboard (item 12) back with the unit, place the keyboard in the slot on the rear top of the foam inserts.

12) Place accessory kit (item 7) on top of the left and right foam inserts.

13) Slide cardboard tube (item 8) over the left and right foam inserts until bottom edges touch the bottom of the cardboard bottom.

14) Place cardboard top (item 10) on the cardboard tube.

15) Secure entire shipping container with repackaging straps (item 9) and buckles (item 11). See the detail of how to use the buckles.

(7.7.1 Shipping Materials and Repack Instructions)

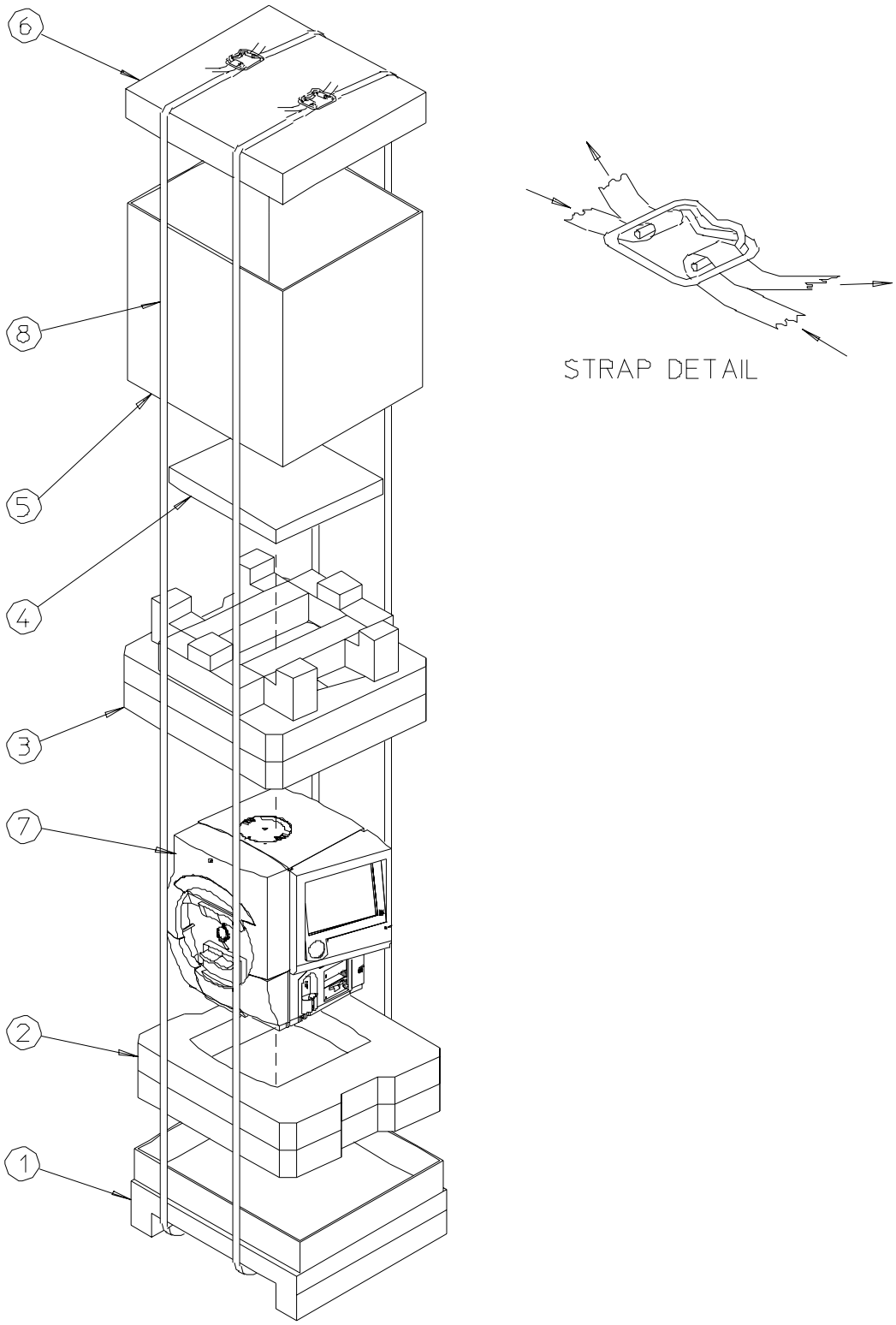

(This page left intentionally blank)

7.7.2 HFA II - i Miscellaneous–1

	Item	Part No.	Description
	1	29991	Assy, Door, Lamp Access, w/label
		29860	Label, Caution, Lamp Door
	2	51114	Cover, Rear
	3	51115	Cable Access Door
	4	29380	Door, Fan Filter
*	5	29381	Filter, Bottom Fan, 114mm/138mm/6.35mm
	6	29793	Assy, Bottom Fan
	7	29700	Gasket, Fan
	8	30447	Guard, Fan
*	9	51072	CPU/Backplane Enclosure (all HFA II - i models)
	10	51070	Bracket, Right, Side
*	11	48530-3	Motor Driver Board (all HFA II - i models)
	12	51071	Bracket, Bottom
	13	28295-12	Screw, M4 x 12, Soc HD, Cap
	14	14445	Washer, Square Cone, .168/.370/.050, ST/Z
	15	29735	Assy, Power Entry Module (with cables)
	16	28293-8	Screw, M3 x 8, Soc HD, Cap
	17	14446	Washer, Square Cone, .142/.307/.039
	18	51485	Bracket, IDE and Floppy Cable
	19	29861	Screw, M4 x 8, PH HD, Black STL

(* indicates recommended spares)

Sparing of small hardware is left to the discretion of the service engineer.

(7.7.2 Miscellaneous–1)

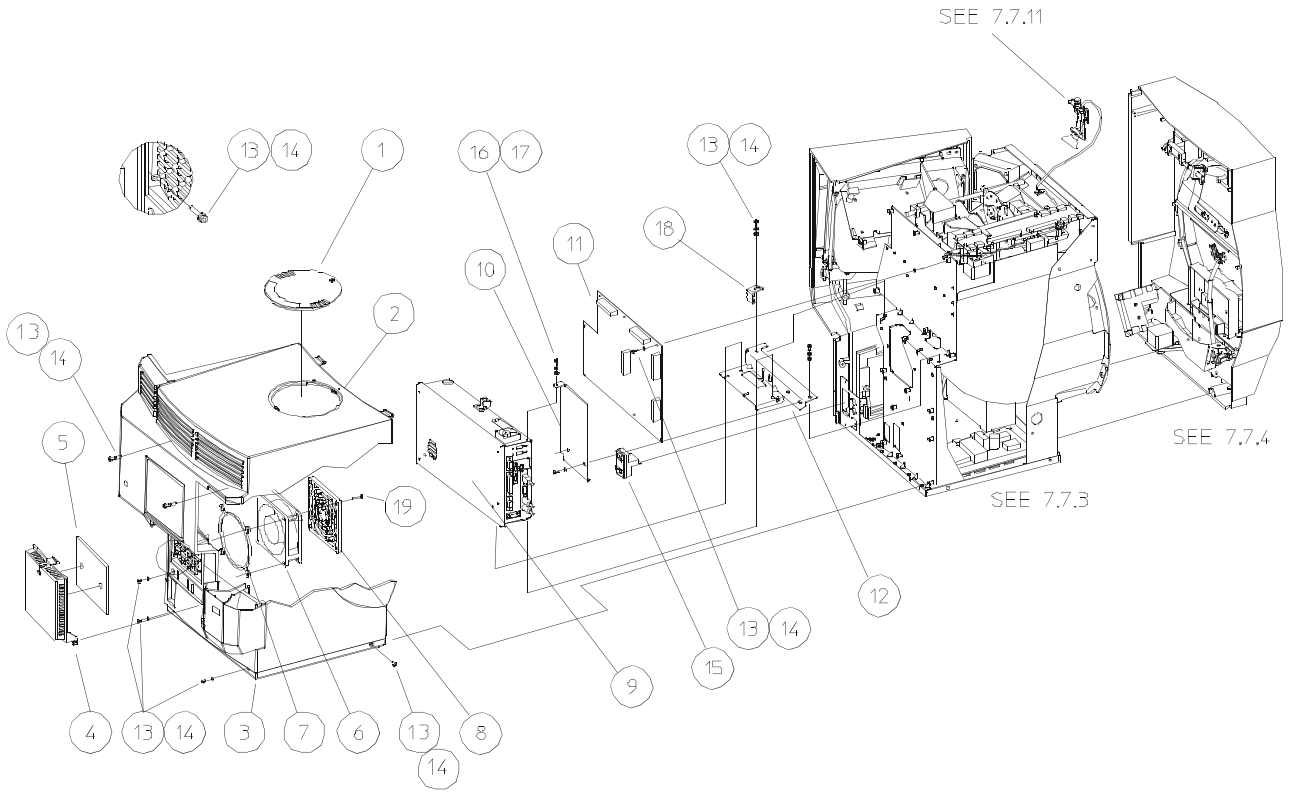

7.7.3 Miscellaneous–2

Item	Part No.	Description
1	28293-12	Screw, M3 x 12, Soc HD Cap S/BZ
2	14446	Washer, Square Cone, .142/.307/.039 ST/Z
3	28295-8	Screw, M4 x 8, Soc HD Cap S/BZ
4	14445	Washer, Square Cone, .168/.370/.050 ST/Z
5	29738	Washer, Flat .187/.750/.060
6	28293-6	Screw M3 x 6 Soc HD Cap
7	30564	Bracket, Fan
* 8	29575	Assy, Patient Button
9	28295-12	Screw, M4 x 12, Soc HD, Cap
10	29378-3	Panel, Disk Drives
11		Item number not used
12	29731	Baffle, Patient Support
13	2048	Washer, Flat, .188/.505/.030
* 14	51487-1	Assy, Power Supply w/added bracket and fan
	52363	Power Supply Fan
15	30072	Plug, Cut Out, Bowl
16	1147	Tape, Foam, 375 Gray
17	24489	Retainer, Filter (Blue/Yellow)
18	29956	Filter, Heat (Blue/Yellow)
19	29958	Diffuser (Blue/Yellow)
20	29957	Filter, Yellow (Blue/Yellow)
21	29950	Bracket, Mount, Filters (Blue/Yellow)
22	01147	Tape, Foam, 375 Gray
23	32387	Washer, Lock, Int M4/8.0/0.5
* 24	06526	Clamp, Cable, C-Clip
25	29594	Assy, Cable,CPU to Ext Keyboard
26	14823	Bumper, #8 Screw .93 x .62 Grey
* 27	28295-12	Screw M4 x 12 Soc HD Cap
* 28	29692	Assy, Connector, Mdlr, RJ-11
* 29	29461	Receptacle, 1/4-turn Fastener
* 30	01501	Term, Tab, 25M #8
31	30035	Assy, Cable, Gnd, Frame to P/S
32	29690-4	Wire, Saddle, -4 Tall
	32755-3	Nut, M3 Lock Poly Amid Insert (not shown)
	01350	Washer, Flat #8 (not shown)
	29874	Gromet, Ribbed .155/.379/.230/.05 (not shown)
	29774	Assy, Fan, 12V Upper (not shown)
	30560	Guard, Fan, 80mm (not shown)
	28293-40	Screw, M3 x tab, Soc Hd Cap (not shown)
	30561	Filter, Foam, Fan 80mm (not shown)
	30562	Retainer, Filter, Fan 80mm (not shown)

(* indicates recommended spares)

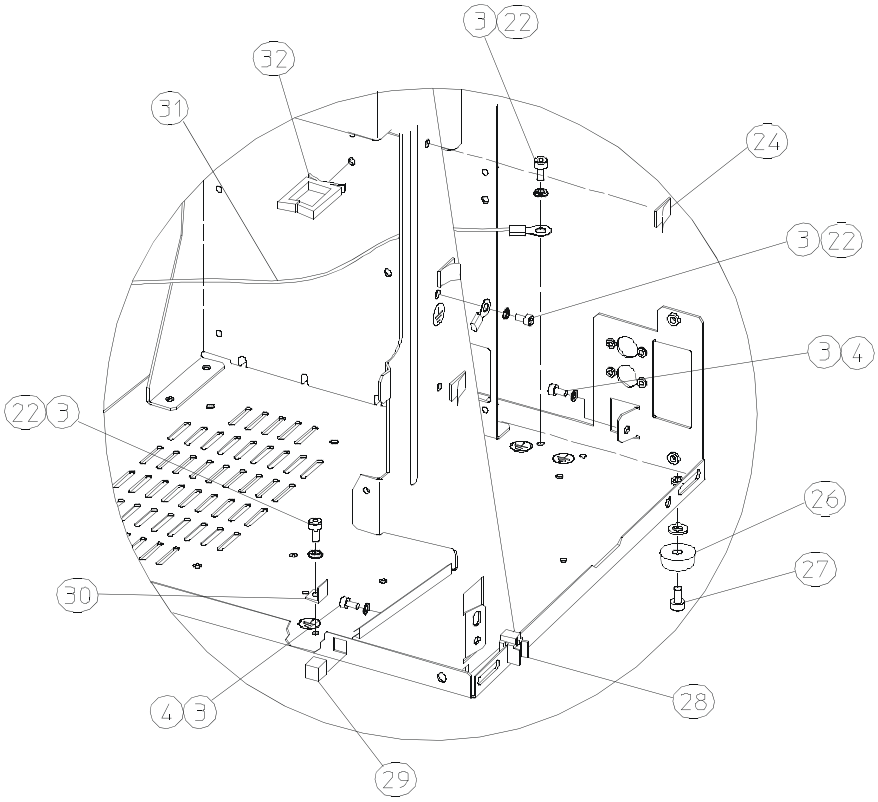
3 22
32
31
24
3 22
3 4
22 3
26
27
30
28
4 3
29

(This page left intentionally blank)

(7.7.3 Miscellaneous–2)

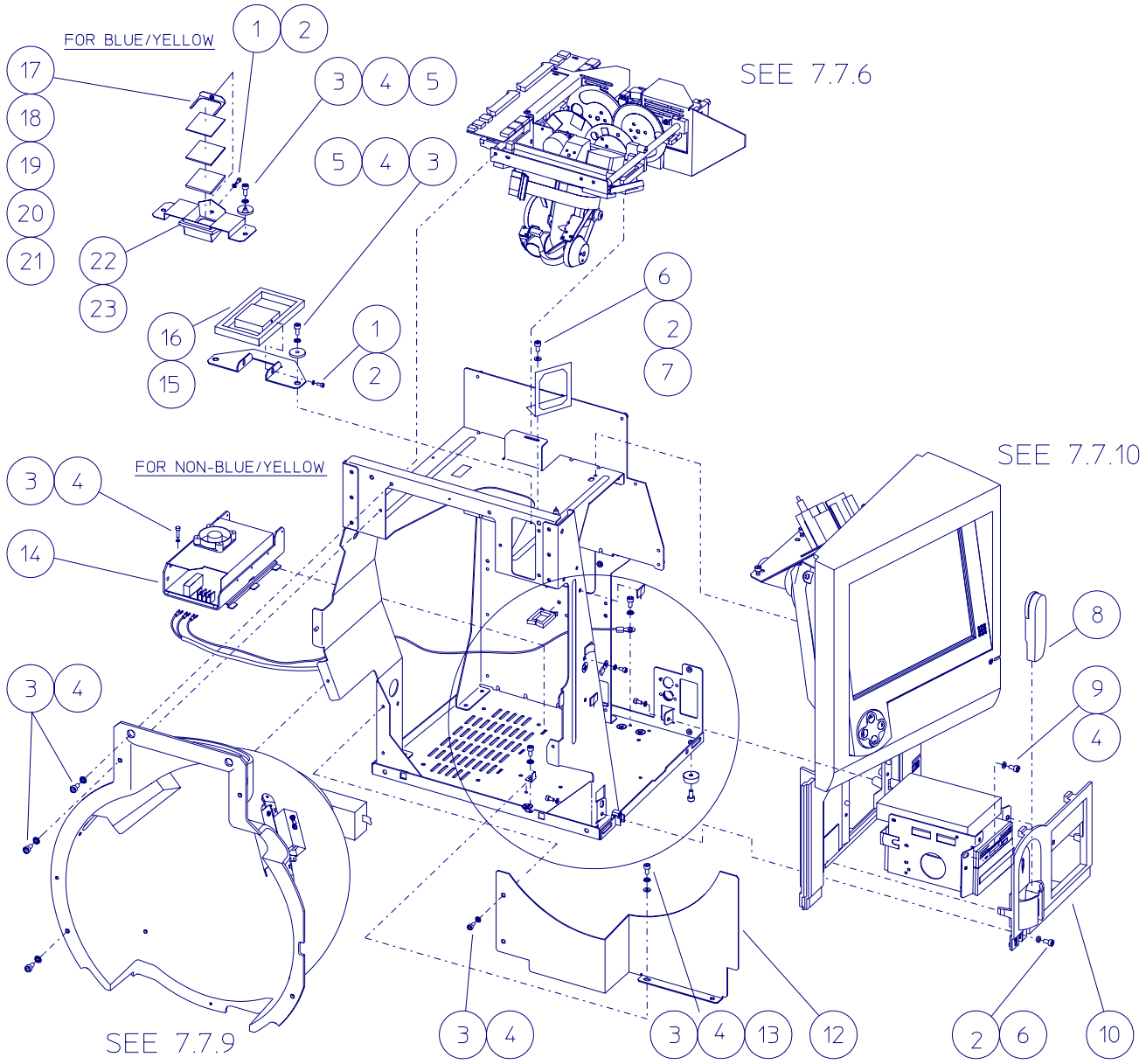

7.7.4 Patient Support Assembly

	Item	Part No.	Description
*	1	29551	Belt, 370/2.03/6.0
	2	28375-6	Setscrew, M4 x 6, Set Soc Cup
	3	29396-18	Pulley, 18/2.03/5
	4	29574	Washer, Flat, Nylon, .200/.437/.020
	5	28377-4	Setscrew, M3 x 4, Soc Cup
	6	29493	Leadscrew and Nut, Horizontal
	7	29513-4	Screw, Shoulder, 5.0/4 M4 Soc HD
	8	30213	Gasket, Front cover
	9	32329-6	Screw, M4 x 6, Soc Btn HD Cap
	10	14445	Washer, Square Cone .168/.370/.050
	11	29498	Headrest, Molded (Non-Blue/Yellow)
	12	29408	Slide, Chinrest, Horizontal
	13	29489	Spacer, Forehead Rest
	14	29300	Cover, Front
*	15	29460	Stud Fastener, ¼ turn, 4mm x 24mm
*	16	29462	Retainer, Stud Fastener, ¼ Turn, 4mm
	17	28295-8	Screw, M4 x 8, Soc HD Cap
	18	29719	Rivet, Push, Nylon
	19	28295-20	Screw, M4 x 20, Soc HD Cap
	20	00566	Washer, Flat, .198/.437/.062
	21	30076	Headrest, Molded (Blue/Yellow)
	22	30069	Baffle, Blue/Yellow
	23	30068	Holder, Baffle, Blue/Yellow
	24	22715	Screw, 2-56 x .188
	25	06711	Washer, Wavy, .25/.345/.008
	26	29893	Black Out Velvet Patch

(* indicates recommended spares)

(7.7.4 Patient Support Assembly)

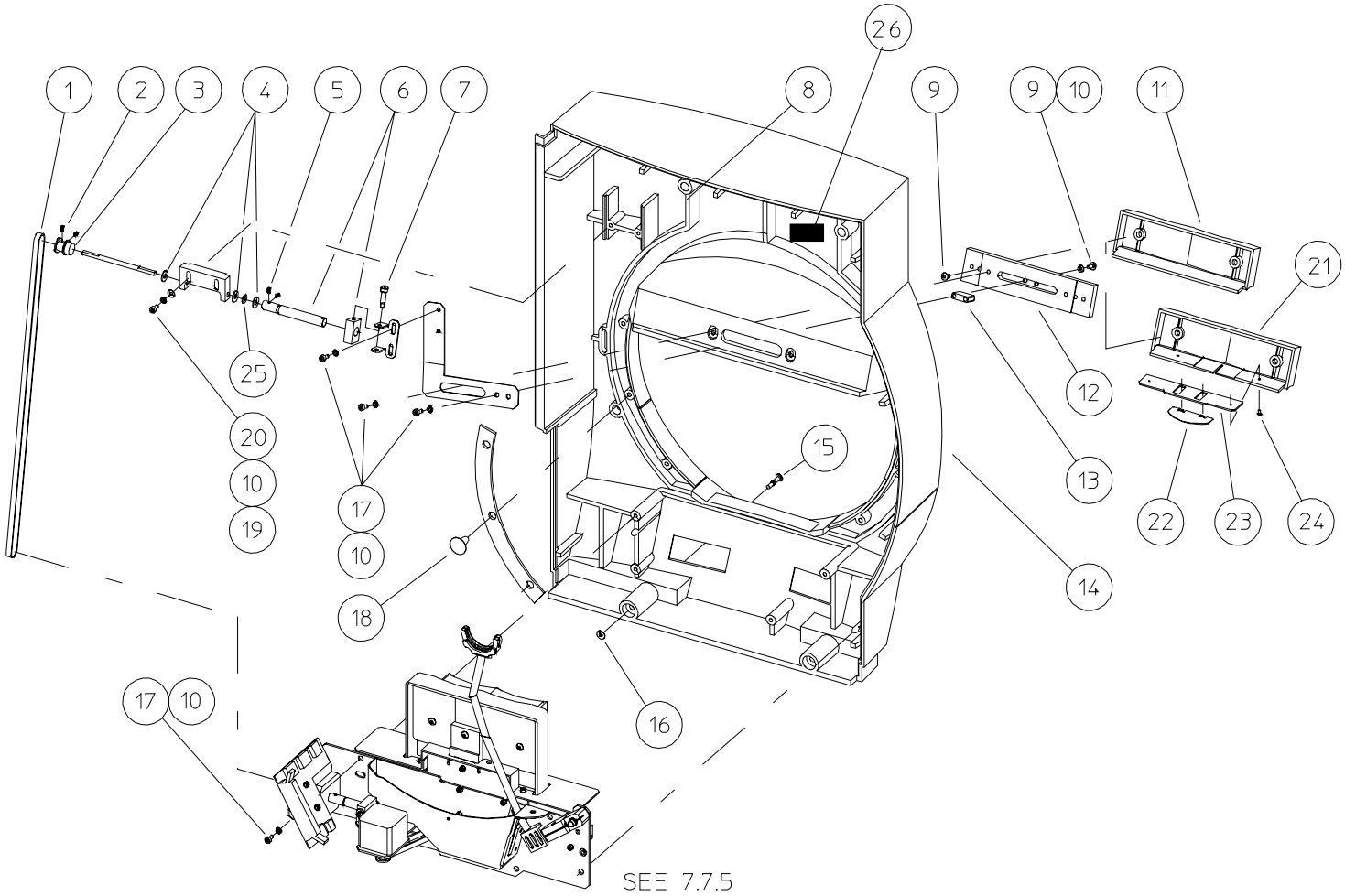

7.7.5 Chinrest / Trial Lens Holder Assembly

Item	Part No.	Description
	29980-1	Patient Support Assembly (720i)
	29980-23	Patient Support Assembly (740i/750i)
* 1	29395-102	Belt (102/2.03/6)
2	28375-4	Setscrew, M4 x 4, Soc Cup
3	29396-18	Pulley (18/2.03/5)
4	30385	Washer, Flat (.200/.437/.031)
5	29494	Support, Chinrest
6	29519	Bearing, Ball (5.0 x 16.0 x 5.0)
7	29492	Leadscrew and Nut, Vertical
* 8	29677	Assy, X Motor, Chin/Headrest
9	28377-4	Setscrew, M3 x 4, Soc Cup
10	29729-50	Pin, Roll, .094 Dia x .50
11	29493	Leadscrew & Nut, Horizontal
12	28293-8	Screw, M3 x 8, Soc HD Cap
13	14446	Washer, Square Cone (.142/.307/.039)
14	29495	Bracket, Stiffner, Chinrest
15	29499	Chinrest, Molded
16	29409	Slide, Chinrest, Vertical
17	29513-4	Screw, Shoulder, 5.0/4 M4 Soc HD
18	28295-8	Screw, M4 x 8, Soc HD Cap
19	14445	Washer, Square Cone (.168/.370/.050)
* 20	29678	Assy, Y Motor, Chin
* 21	29526	Bearing, Snap-in, (.187 x .234 x .140)
22	00566	Washer, Flat, (.188/.437/.062)
23	29408	Slide, Chinrest, Horizontal
* 24	08112	Retaining Ring, .125 shaft
* 25	29520	Spring, Compression, (.210 x .500)
26	29476	Flag, Edge Detector
27	32446	Nut, M3 Kep
28	29475	Bracket, Edge Detector
* 29	29581	Assy, Edge Detector
30	32382	Washer, Split (M3/5.6/1.0)
* 31	29524	Ball
32	28293-12	Screw, M3 x 12, Soc HD Cap
33	29477	Shaft, Trial Len
34	28295-30	Screw, M4 x 30, Soc HD Cap
35	29738	Washer, (.187/.750/.060)
36	29728	Washer, Curved (.395/.735/.011)
37	29737	Bearing Shaft, Trial Lens Holder
38	29474	Block, Trial Lens
39	29861	Screw, M4 x 8, PH HD Black
40	49681-1	Assy, Trial Lens Holder (720i)
	49681-23	Assy, Trial Lens Holder (740i/750i)
41	29674	Brush, Trial Lens Tube
42	32329-8	Screw, M4 x 8, Soc, Btn HD, Cap
43	29537	Support

- continued -

44	32383	Washer, Split (M4/7.0/1.2)
* 45	29570	PCB, Interconnect, Patient Support Assy
46	29799	Insulator, PCB
47	29689	Clamp, Wire
48	30139	Block, Patient Support
49	29119	Assy, Cable, Gnd, Trial Lens

(* indicates recommended spares)

Reference Only

Item	Description
50	Chinrest Cover Bracket
51	Trial Lens Trap

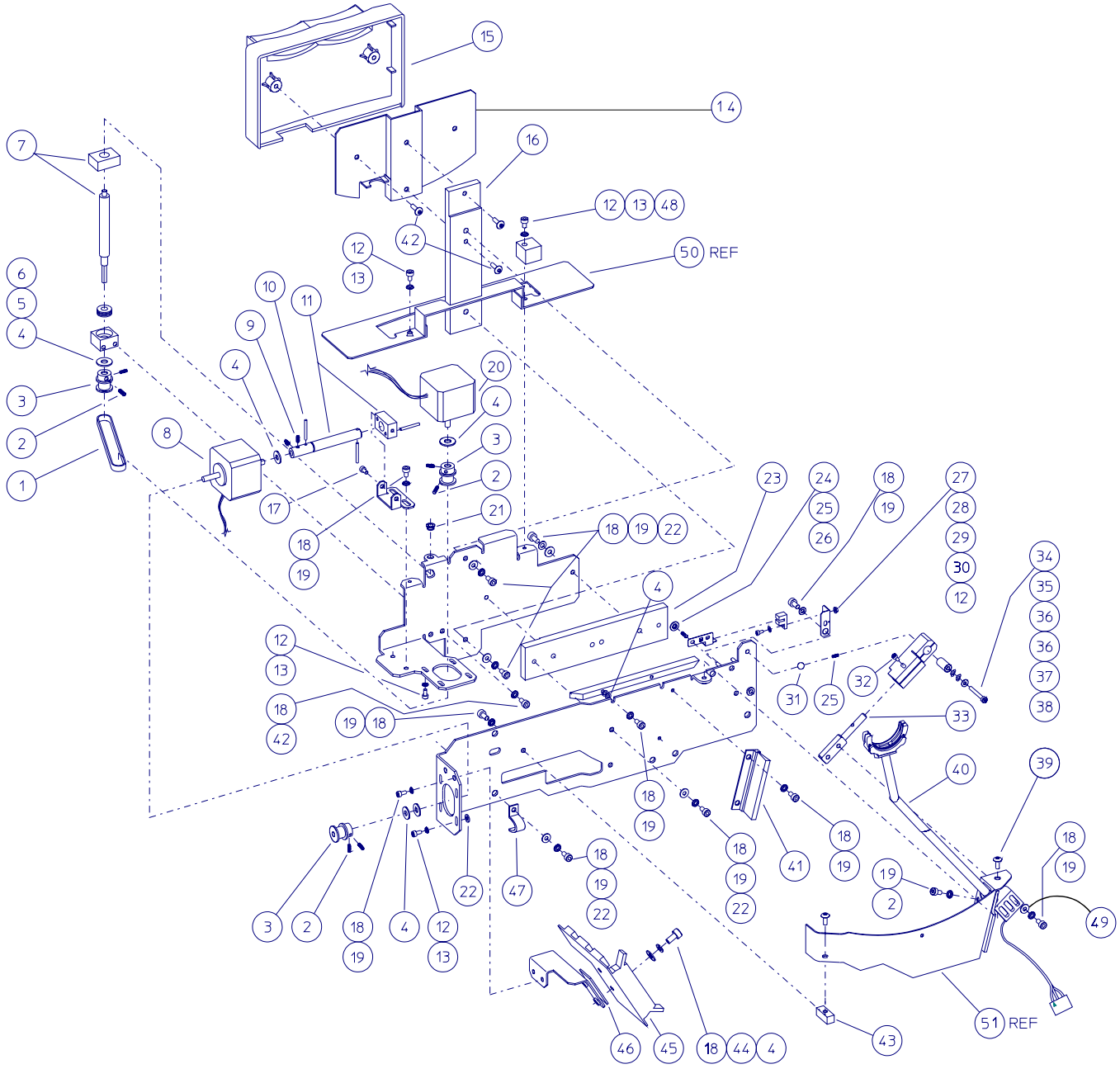

7.7.6 Projection Assembly

Item	Part No.	Description
	29994-1	Complete Projection Assembly 720i
	29994-2	Complete Projection Assembly 740i
	29994-3	Complete Projection Assembly 745i / 750i
1	28293-16	Screw, M3 x 16, Soc HD Button (Do not interchange with slotted head)
2	14446	Washer, Square Cone, .142/.307/.039
3	28021-019	Spacer, .115/.25/.25, Nylon
4	28283-6	Screw, M3 x 6, Soc HD, Btn
5	29750	Bracket, Finger Guard, Shaft
6	08697	Grommet, cont, .037 to .071
7	28293-8	Screw, M3 x 8, Soc HD, Cap
* 8	29395-100	Belt, 100/2.03/6
9	29396-24	Pulley, 24 2.03/5
10	28375-6	Setscrew, M4 x 6, Soc, Cup
* 11	29583	Assy, Motor
12	32446	Nut, M3 Kep
* 13	29581	Assy, Edge Detector
14		Assy, Brightness Detector (see diagram below)
	29975	Assy, Intensity Detector Housing
	30258	Housing Intensity Detector
	29364	Lens, 12.7 FL 6.3 Dia Detector
	29683	Ring, Ret, 6.5 Int
	08105	Window, Spot Intensity (blue)
	08098	Filter, CIE Correction (green)
	06711	Washer, Wavy, .255/.345/.008
	50610	PCB Brightness Detector
	29792	Cover Brightness Detector
	29791	Screw, M3 x 8, PH, HD, White

(* indicates recommended spares)

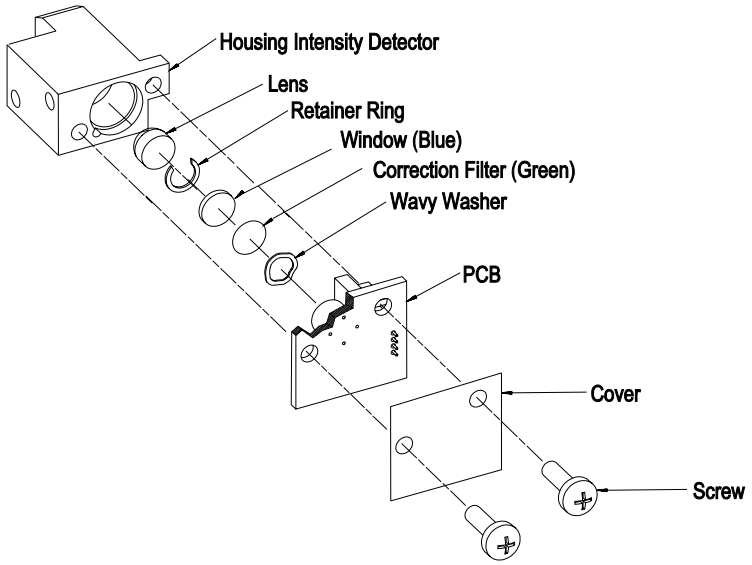

(7.7.6 Projection Assembly)

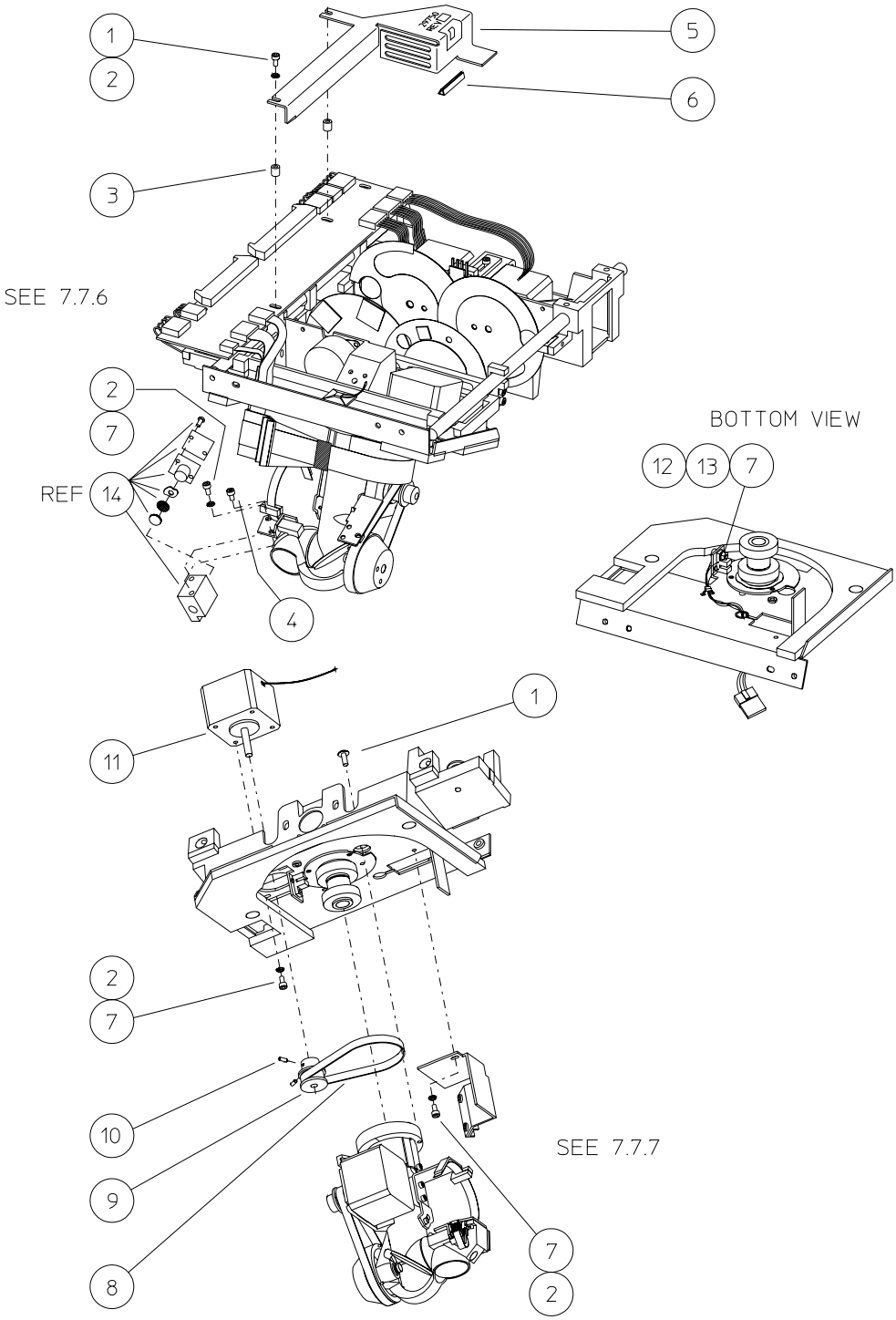

7.7.7 Projector Assembly

	Item	Part No.	Description
	1	29396-32	Pulley, 32/2.03/5
	2	28375-6	Setscrew, M4 x 6, Soc Cup
	3	28293-8	Screw, M3 x 8, Soc HD Cap
	4	14446	Washer, Square Cone, .142/.307/.039
*	5	29583	Assy, Motor
*	6	30106	Assy, Shutter (new style)
	7	28377-6	Setscrew, M3 x 6, Soc Cup
*	8	30453	Assy, Edge Detector
	9	16647	Washer, Flat, .140/.205/.040, Nylon
*	10	29550	PCB, Interconnect, Projection System
*	11	29584	Assy, Shutter Motor
	12	32382	Washer, Split, M3/5.6/1.0
	13	16454	Washer, Flat, .146/.315/.031, Nylon
*	14	30323	PCB, Projection Lamp Assy
	15	34272-20	Screw, M4 x 20, Slotted HD Cap B/Z
		32755-4	Locknut, M4, (not shown — screws onto bottom end of item 15)
	16	14445	Washer, Square Cone, .168/.370/.050
	17	29752	Washer, Spring, Curvy, .174/.322/.008
*	18	29981	Assy, ND Film Wedge
	19	29969	Assy, ND Glass Wedge
	20	29979-2	Assy, Color Wheel (730/735/740)
		29979-3	Assy, Color Wheel (745/750)
	21	29978	Assy, Aperture Wheel
	22	21517	Washer, Flat, .200/.359/.048
	23	29636	Bushing, .188/.312/.50, Flange, Plastic
	24	07063	Washer, Flat, .223/.366/.031, Nylon
	25	30031	Washer, Spring, Curvy, .200/.370/.006
	26	06085	Ring, Retaining, .145 E EXT
	27	29574	Washer, Flat, .200/.437/.020, Nylon
*	28	29395-195	Belt, 195/2.03/6
	29	29686	Pulley, 18/2.03/8
	30	30054	Bushing, 5/8/12, Delrin AF
	31	29513-14	Screw, Shoulder, 5.0/14 M4, Soc HD

(* indicates recommended spares)

(7.7.7 Projector Assembly)

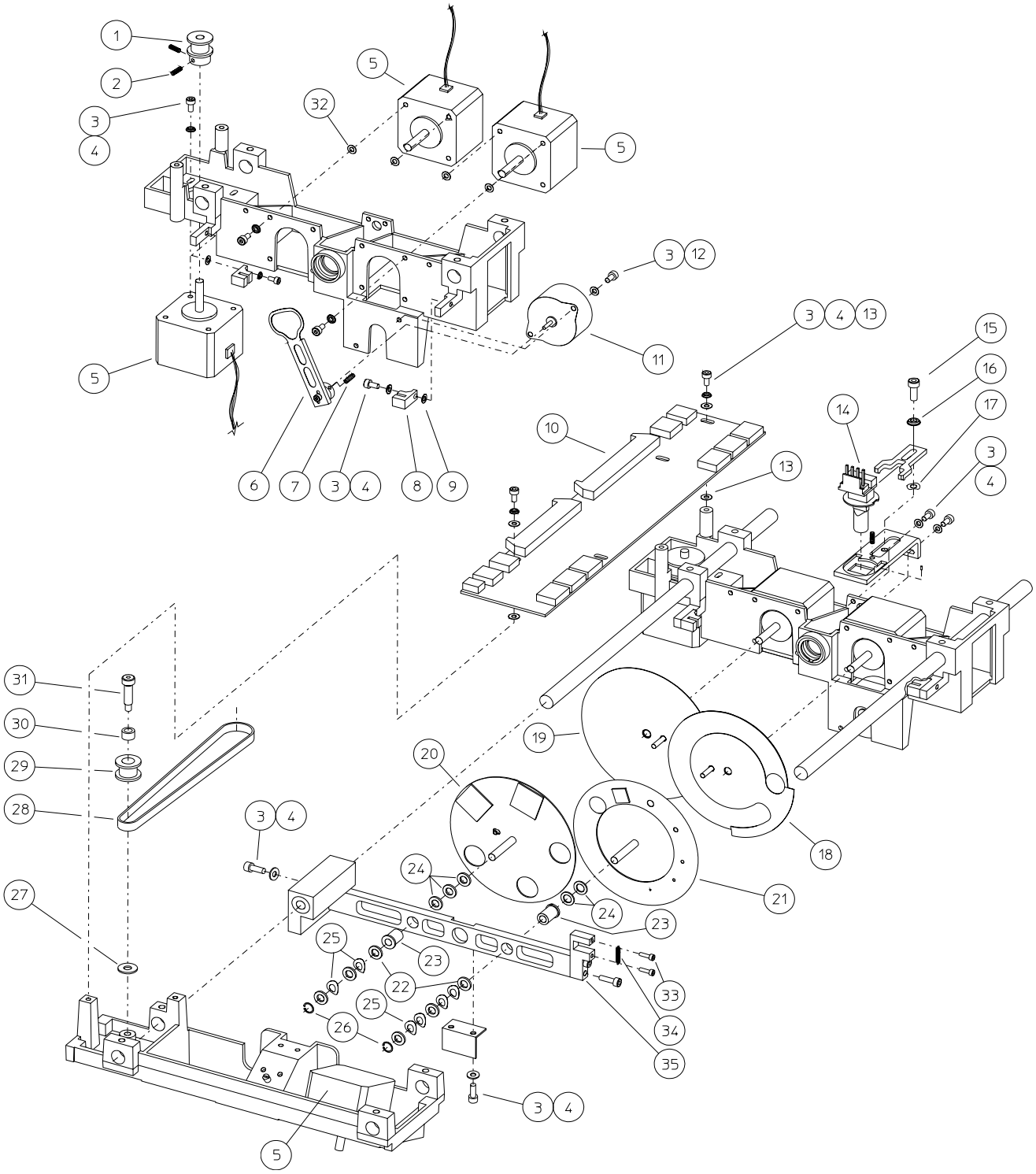

7.7.8 Projection Turret Assembly

	Item	Part No.	Description
	1	29443	Baffle, Oil
	2	28293-10	Screw, M3 x 10, Soc HD, Cap
	3	14446	Washer, Square Cone, .142/.307/.039
	4	29976	Assy, Y Mount
	5	28293-8	Screw, M3 x 8, Soc HD, Cap
	6	29421	Retainer, X, Flex Cable 1
	7	29971	Assy, Turret Flex Cable (includes 3 cables, with mounting brackets - must be replaced as a set)
*	8	29582	Assy, Motor, Y Axis
	9	29396-24	Pulley, 24/2.03/5
*	10	29395-112	Belt, Y Motor, 112/2.03/6
	11	28375-6	Setscrew, M4 x 6, Cup Point
	12	32446	Nut, M3, Kep
*	13	30442	Assy, Edge Detector, Y Axis
	14	30418	Bracket, Y, Big Detector
	15	30213	Foam, Poron w/PSA
	16	00557	Ring, Retaining, .250 E Ext
	17	30194	Washer, Flat, .255/.375/.031, Delron
	18	06711	Washer, Wavy, .255/.345/.008
	19	30348	Pulley, Y, Molded
	20	07466	Spacer
	21	28283-6	Screw, M3 x 6, Soc HD, Btn
	22	28293-12	Screw, M3 x 12, Soc HD, Cap
	23	04648	Heat Shrink, Black, 1/4
	24	29975	Assy, Brightness Detector
	25	29541	Bracket, Brightness Detector
	26	22758	Adhesive, Black Max Loctite 380

(* indicates recommended spares)

(7.7.8 Projection Turret Assembly)

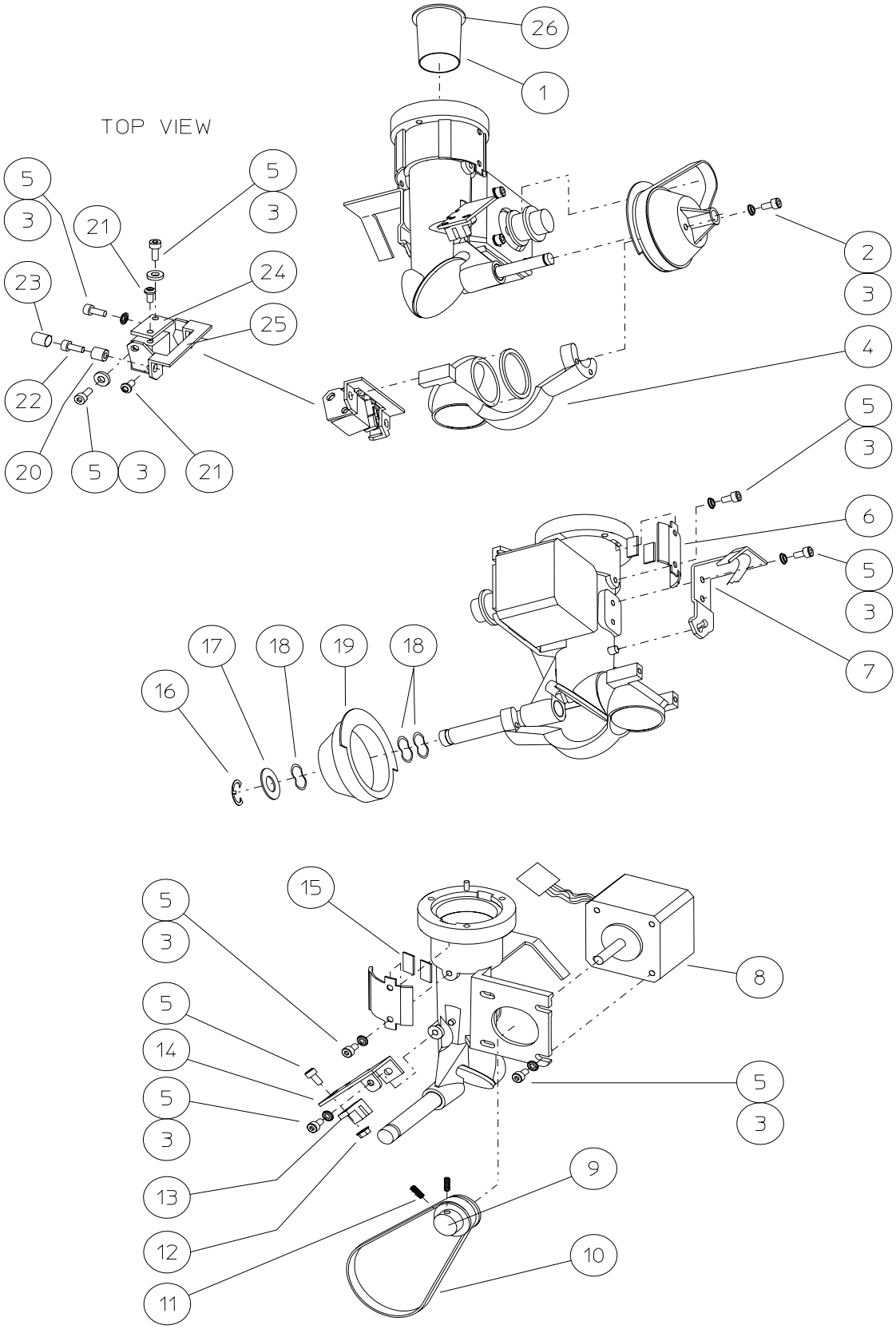

7.7.9. Bowl Assembly

Item	Part No.	Description
1	48483	Plug, HFA2, Blue/Yellow
2	48482	Baffle, HFA2, Background, Left
3	48698	Mirror, HFA2, Cold (740i,745i,750i)
4	48624	Holder, HFA2, Mirror, Cold, Left (740i,745i,750i)
5	48625	Holder, HFA2, LED IR (740i,745i,750i)
6	29652	LED IR, High Power, T05 (740i,745i,750i)
7	48626	Clamp, HFA2, LED IR (740i,745i,750i)
8	28295-8	Screw, M4 x 8, Soc HD, Cap
9	14445	Washer, Square, Cone (.168/.370/.050)
10	49025	Bracket, HFA2, Plug, IR Illumination
11	49026	Plug, HFA2, IR Illumination
12	48627	Clamp, HFA2, Holder, LED, IR
13	48763	Holder, HFA2, Mirror, Cold, Right (740i,745i,750i)
14	48481	Baffle, HFA2, Background, Right
	52755	Assembly, IR LED (Consists of items 4, 5 & 6) (740i,745i,750i) (not shown)
	29990	Assembly, Bowl Lamp, Left (not shown)
	29989	Assembly, Bowl Lamp, Right (not shown)

(7.7.9 Bowl Assembly)

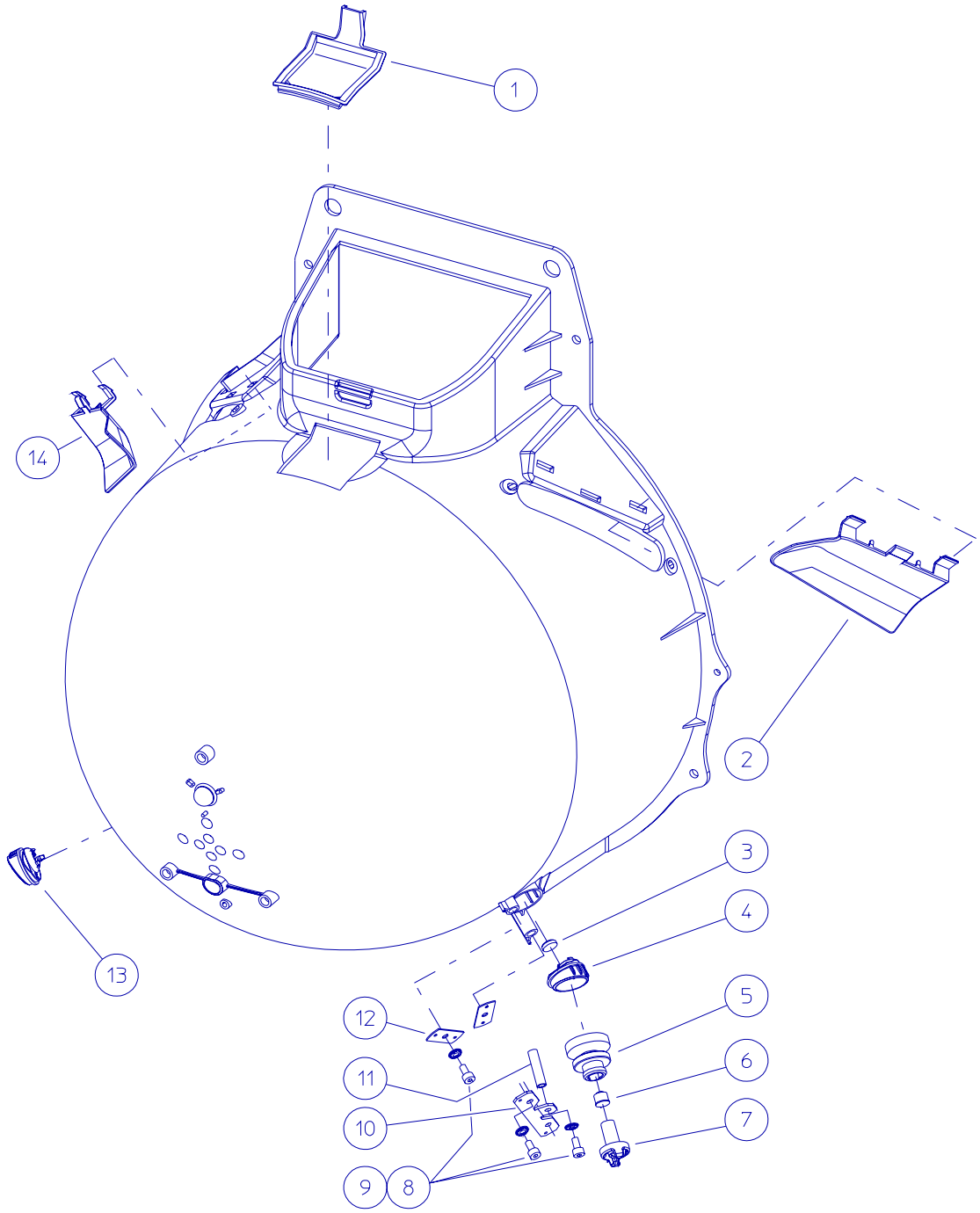

7.7.9.1 Bowl Assembly

Item	Part No.	Description
1	48629	Clip, HFA2, Beamsplitter, Central
2	29577	Filter, Beamsplitter, CCD (740i,750i)
	49024	Beamsplitter, HFA2, Fixation (720i)
3	28295-20	Screw, M4 x 20, Soc HD, Cap
4	14445	Washer, Square Cone (.168/.370/.050)
5	50203	Holder, HFA2, LED Reflex
6	47267	Assy, Cable, HFA2, Gaze LED
7	--------	LED, Central Fixation (part of 48820)
8	48628	Mount, HFA2, Camera
9	48820	PCB, Fixation
10	47117	HFA2, CCD Camera
11	48480	Bowl, HFA2, 175mm RAD
	52756	Fixation Assembly (Contains items 5, 6 & 9) (Not Shown)

(7.7.9.1 Bowl Assembly)

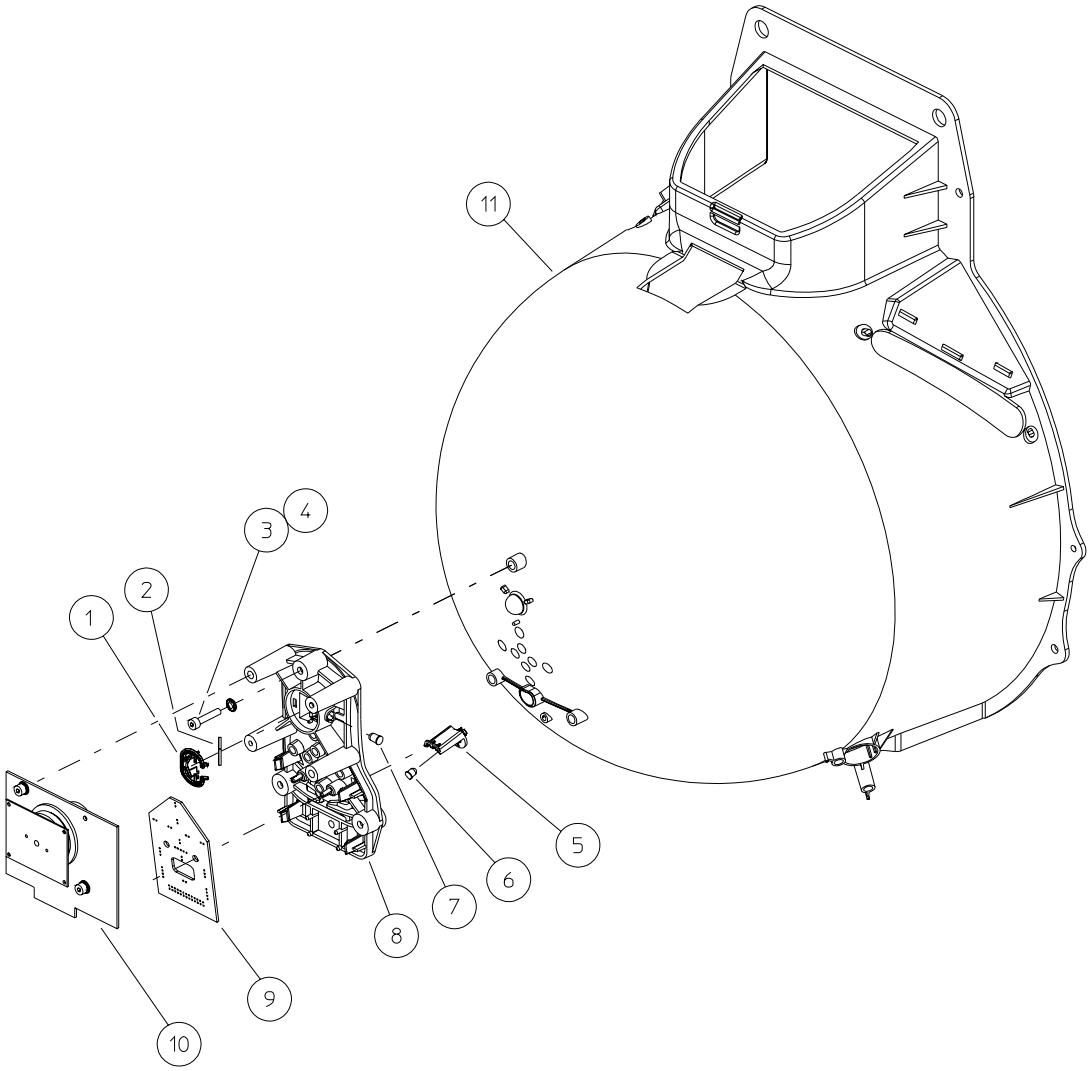

7.7.10 Operator Panel Assembly

Item	Part No.	Description
1	29302	Panel, Operator
--	29992	Chinrest Switch Assy
2	29390	Button, Chinrest Switch
3	28293-8	Screw, M3 x 8, Soc HD Cap
4	14446	Washer, Square Cone (.142/.307/.039)
* 5	29610	PCB, Chinrest Switch Assy
6	28295-8	Screw, M4 x 8, Soc HD Cap
7	14445	Washer, Square Cone (.168/.370/.050)
* 8	29765	Spring, Compression (.312/.750/.017)
* 9	32439	Retaining Ring
10	29698	Gasket, Touchscreen, Long
11	29699	Gasket, Touchscreen, Short
* 12	30411	Touchscreen, 12", CRT
13	30198	Gasket, Foam, CRT
--	30434	Monitor Assy (pcb, yoke, tube & bracket)
* 14	30086	PCB, CRT, Z-Axis
* 15	29841	Shield, CRT PCB
16	30432	CRT, 12" P-4 90 Degrees 50" Radius
17		Item number not used
18	08501	Spacer, PCB Snap, .187, Nylon
19		Item number not used
20		Item number not used
21		Item number not used
22	30087	Yoke assy, Z-Axis
23	02048	Washer, Flat, .188/.505/.030
24		Item number not used
25	00566	Washer, Flat, .198/.437/.062
26	28295-20	Screw, M4 x 20, Soc. HD, Cap.
27	01147	Tape, Foam, 2.0 Feet (goes around each end of the CRT tube)
28	01273	Washer, Flat, .250/.375/.031

(* indicates recommended spares)

(7.7.10 Operator Panel Assembly)

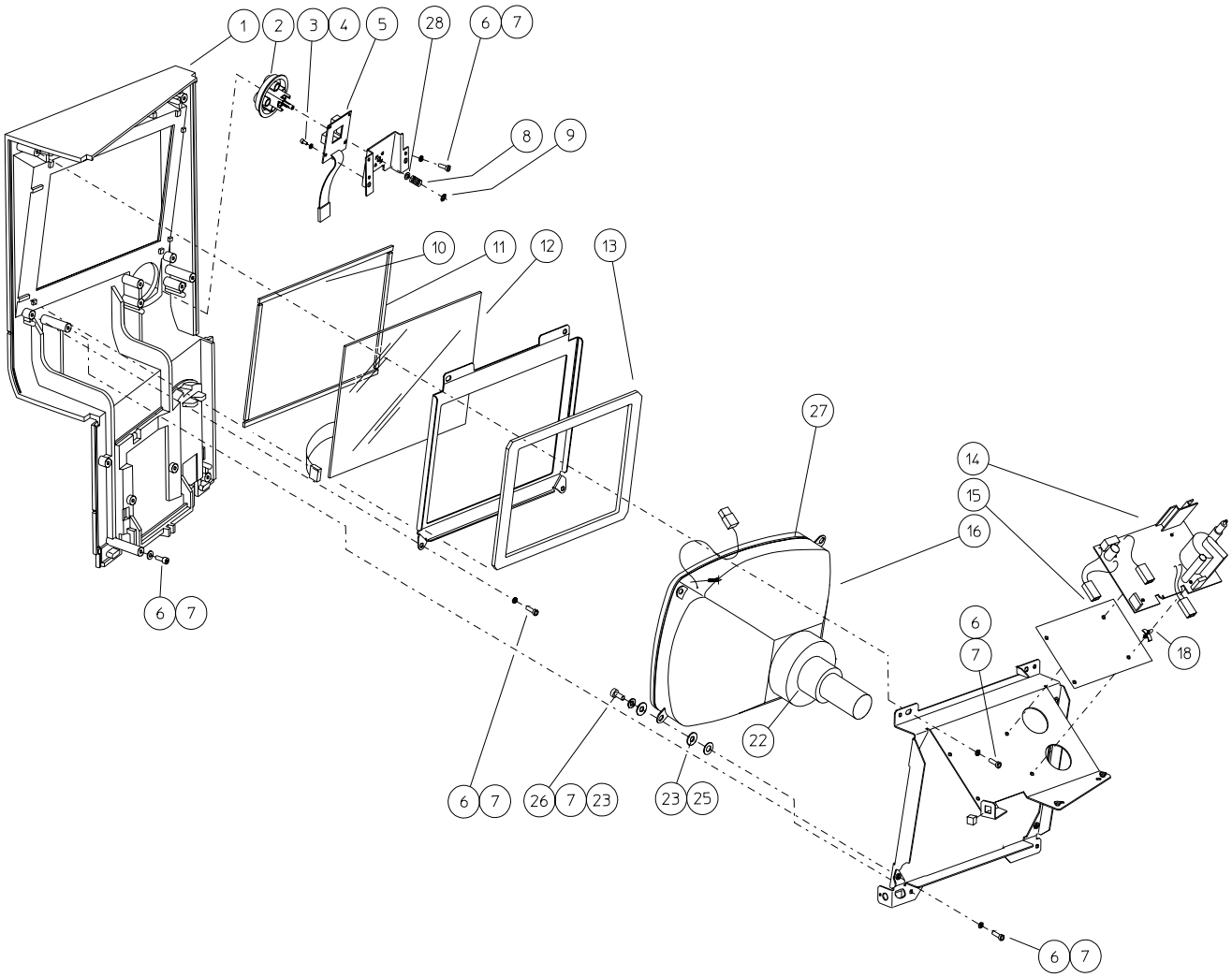

7.7.11 B/Y Lamp Assembly

Item	Part No.	Description
--	30071	Yellow Lamp Assy (includes all items listed below)
1	30070	Cable Assy, Motor Driver PCB to B/Y Lamp (two wires with connector at one end)
* 2	29954	Lamp, Halogen, w/Reflector
* 3	24495	Spring, B/Y Lamp
4	28293-8	Screw, M9 x 8, Soc HD Cap
5	14446	Washer, Square Cone, .142/.307/.039
6	29948	Bracket, B/Y Lamp, Stationary
7	29949	Bracket, B/Y Lamp, Removable
8	29953	Socket, B/Y Lamp (with two wires attached)
9	00673	Cable Tie
10	33423-0125	Sleeve, Expandable, Polyester .12 Black
11	30312	Shield, Lamp

(* indicates recommended spares)

(7.7.11 B/Y Lamp Assembly)

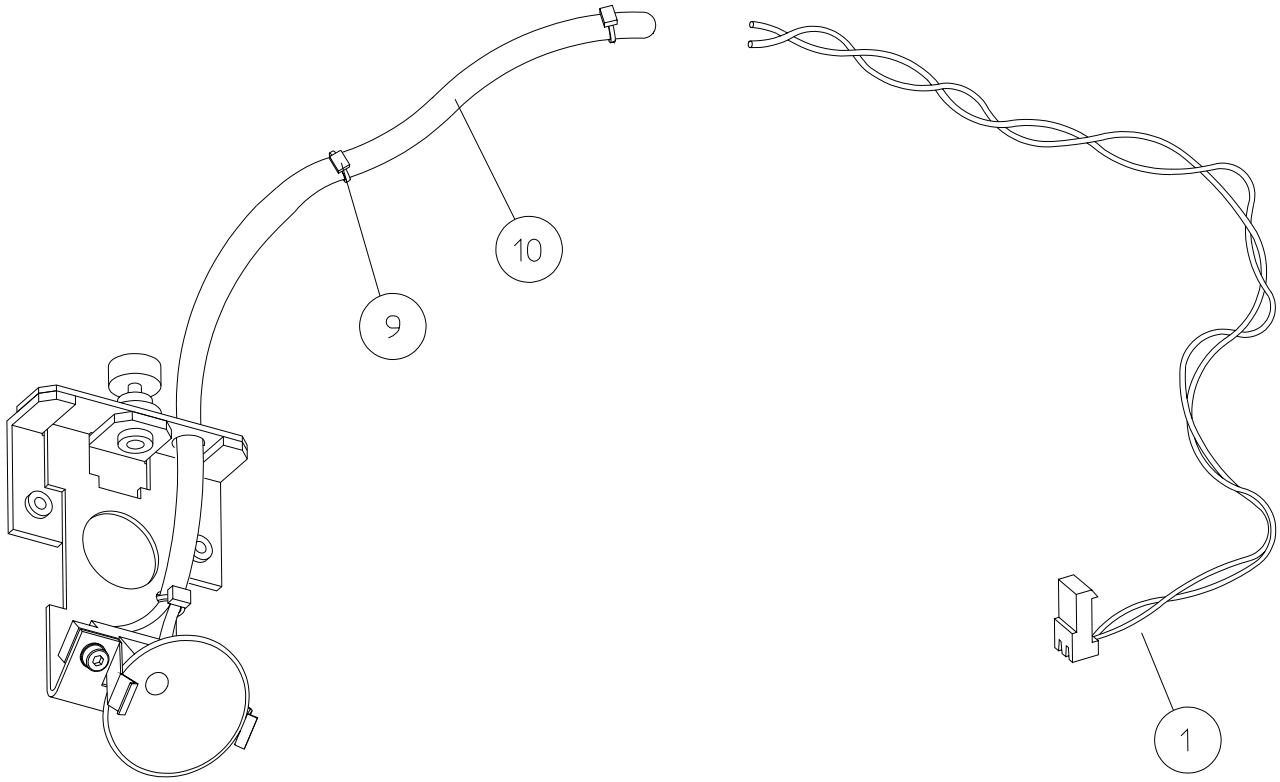

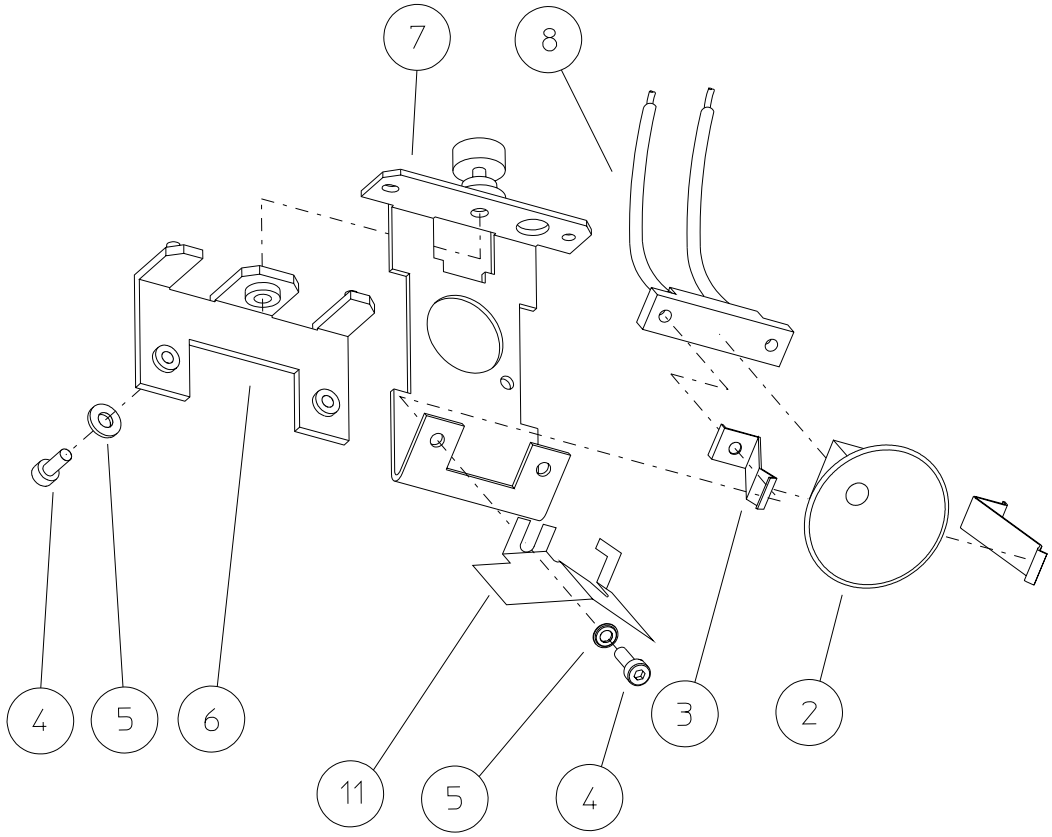

7.7.12 Drive Mounting Assemblies

	Item	Part No.	Description
	1	51290	Assy, LED, HFA II - i Hard Drive, IBM (720i, 740i,750i)
		680978	Cable Clamp, Assy LED (Not Shown)
*	2	52036	Drive, hard, IDE 20 Gigabyte, (720i, 740i,750i)
	3	29631	Holder, LED, Hard Drive
*	4	51476	Drive, Magnetic Optical, 3 ½", ATAPI
*	5	29244	Drive, Floppy, 3½", High Density
	6	06548	Screw, 6-32 x .375, Soc HD Cap
	7	14446	Washer, Square Cone, .142/.307/.039
	8	24073	Label, Drive Date Code
	9	28293-8	Screw, M3 x 8, Soc HD Cap
	10	14196	Screw, 6-32 x .250, Soc HD Cap
	11	51486	Panel Drive, Blanking, HFA II - i (attached using items 7 & 9)
	12	30317	Floppy Drive Cable Retaining Bracket

Note **-** Refer to service bulletin FA2i-003(x) for additional hard & tape drive information.

(* indicates recommended spares)

(7.7.12 Drive Mounting Assemblies)

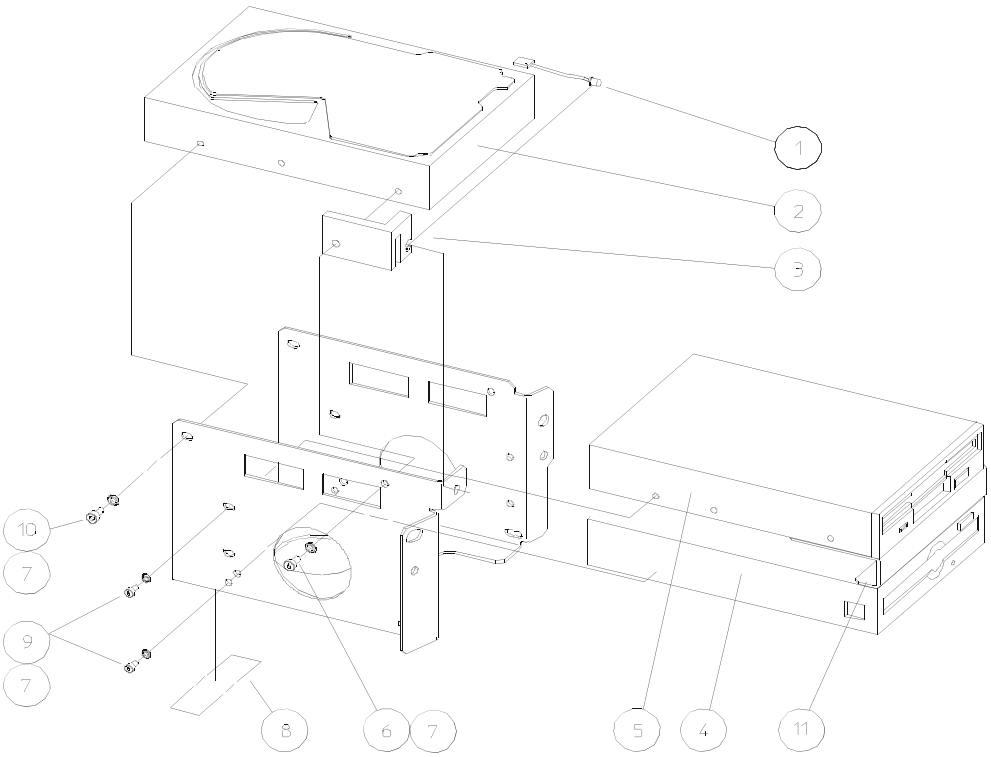

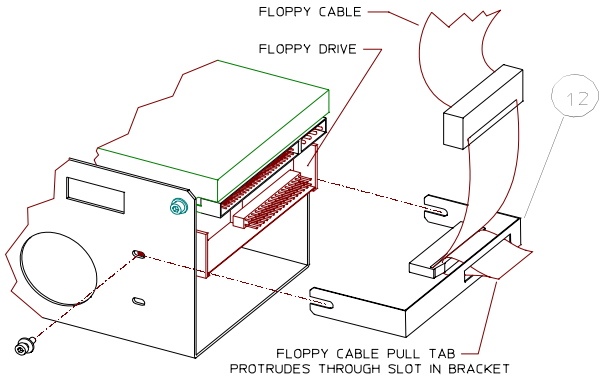

7.7.13 CPU/Backplane Enclosure

Item	Part No.	Description
	51804	Assy HFA II - i CPU/Backplane Enclosure and Shipping Box
	51978	Shipping Box for CPU/Backplane Enclosure
	51072	CPU and Enclosure
1	51477	CPU PCB, HFA II - i, 433MHz
2	49700	Backplane PCB, HFA II - i,
3	49443	DIMM, 64MB, PC100, NonECC
4	51068	Box, HFA II - i, EMI Shield
5	53103	Assembly Lid, HFA II - i, Box EMI
6	51067	Clamp, HFA II - i, CPU PCB
7	51069	Bracket, External, CPU PCB Clamp
8	50827-1	Cable, HFA II - i Serial No. 1
9	50827-2	Cable, HFA II - i Serial No. 2
10	50828	Cable, HFA II - i Parallel Port
11	50829	Fan with Cable, HFA II - i, 5 volt
12	50634	Cable USB
13	29695	Brightness Pot, Assembly
14	53543	Knob, Brightness Pot
15	38706	Snap Bushing 0.625" dia.
16	51459	Push Spacer
17	38116	Snap Bushing 0.750" dia
18	06526	Cable Clamp, C-Clip
19	30352	Gasket, EMI foam 1/8" X 1/4"
20	29690-4	Wire Saddle - 4
21	29690-1	Wire Saddle - 1
22	51460	Flat Tie Holder
23	51778	Braided Ground Cable HFA II - i
24	00673	Tie Wrap, Black
25	28375-6	Screw, M4 X 6 set Socket Head, Cup
26	28293-8	Screw, M3 X 8, Socket Head, Cap
27	14446	Washer, Square Cone, .142/.307/.039
28	28293-20	Screw, M3 X 20, Socket Head, Cap
29	51784	Screw, #6 X 0.625" Self Tap, A-AB Phil
30	51484	Shield Brightness Pot Insulator, HFA II - i
31	36260	Screw, 4-40 X .25 Jack Socket
32	51760	Clamp, IDE/Floppy Cable HFA II - i
33	01207-36	Label, SN, HFA II - i CPU
34	29460	Stud Fastener, 1/4 Turn 4 X 24 MM
35	29462	Retainer Stud Fastener, 1/4 Turn
36		Item number not used
37	51285	Caplug SVGA
	43824	Ferrite (Not Shown)
	51758	Bracket, Ferrite (Not Shown)
	48694	SCR M2 X 4 Phil Hd (2 Ea) (Not Shown)

(7.7.13 CPU/Backplane Enclosure)

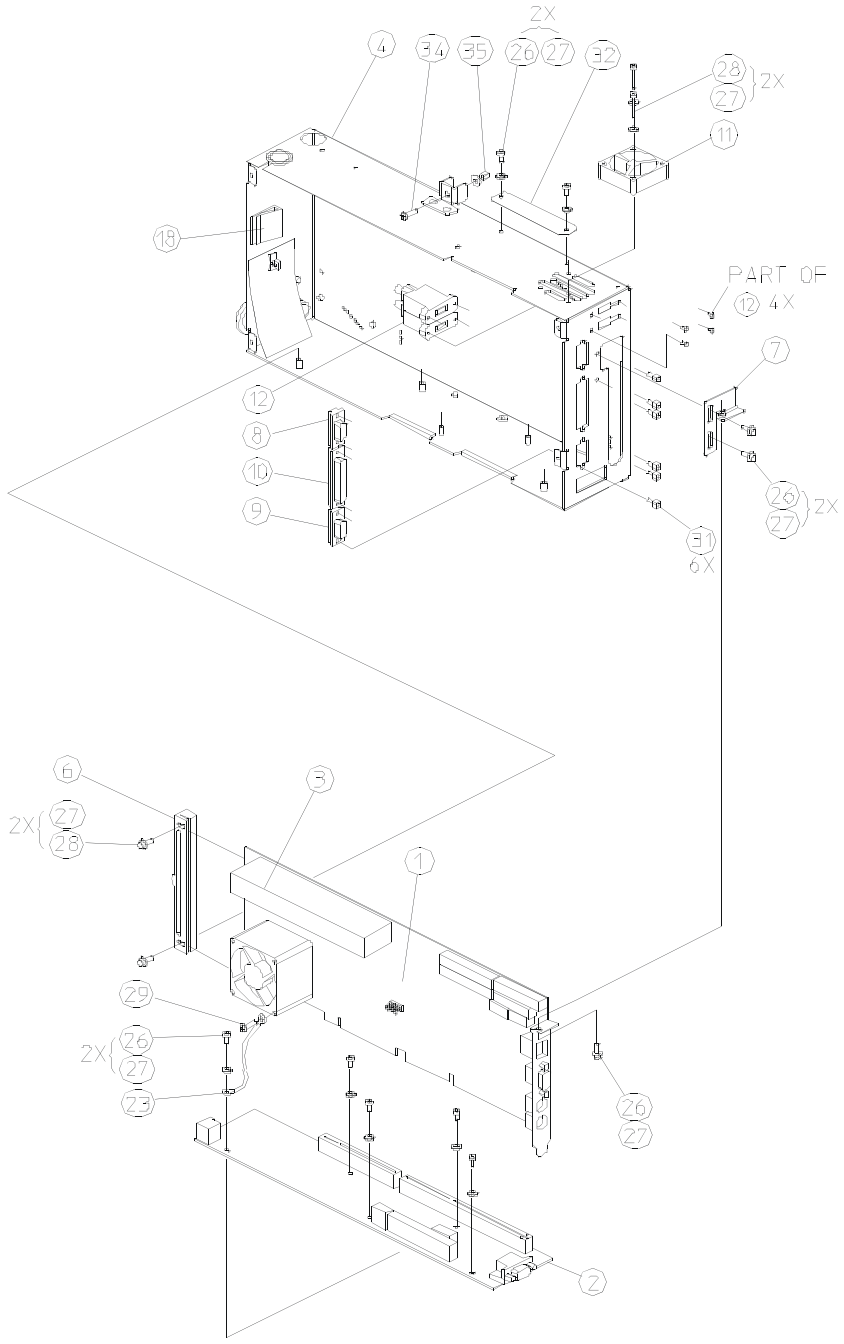

(7.7.13 CPU/Backplane Enclosure)

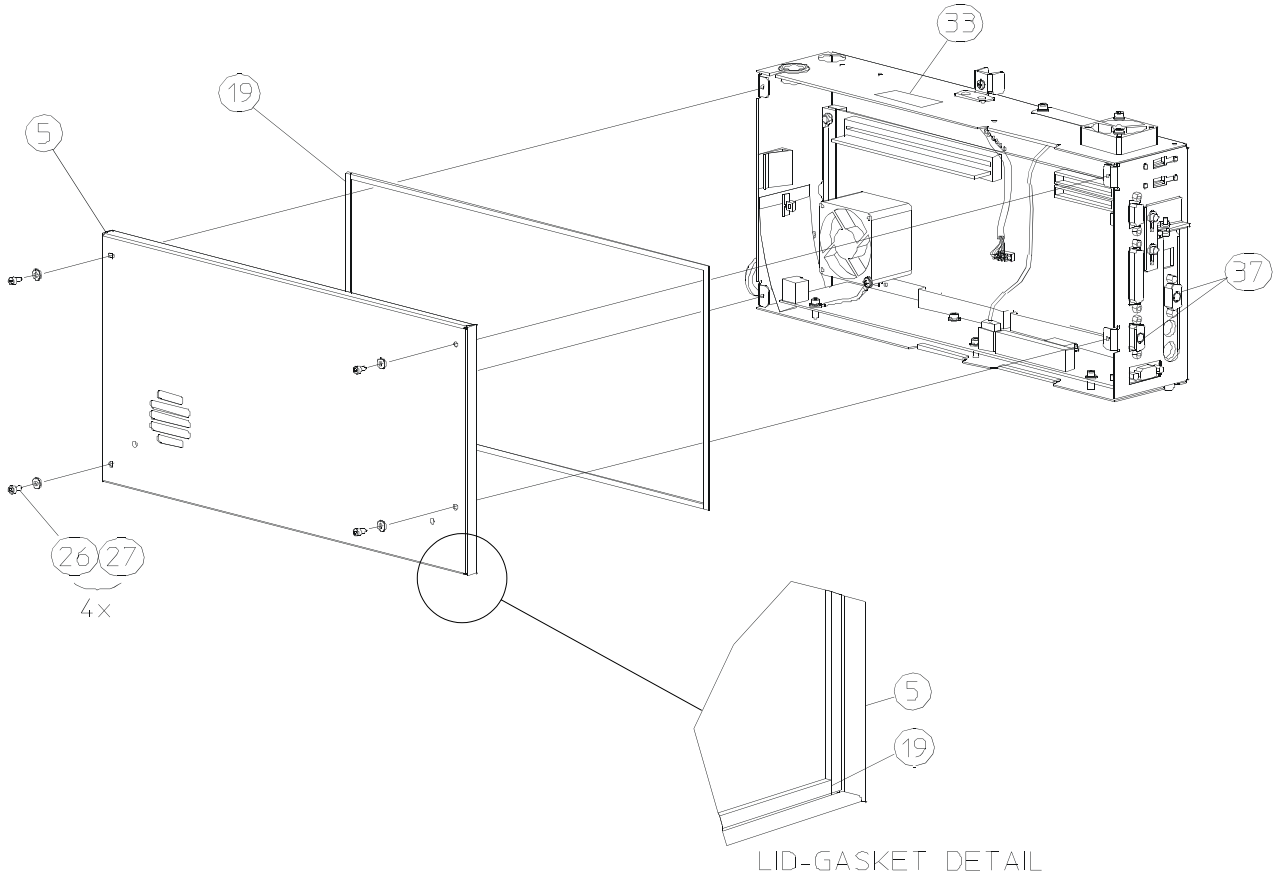

(7.7.13 CPU/Backplane Enclosure)

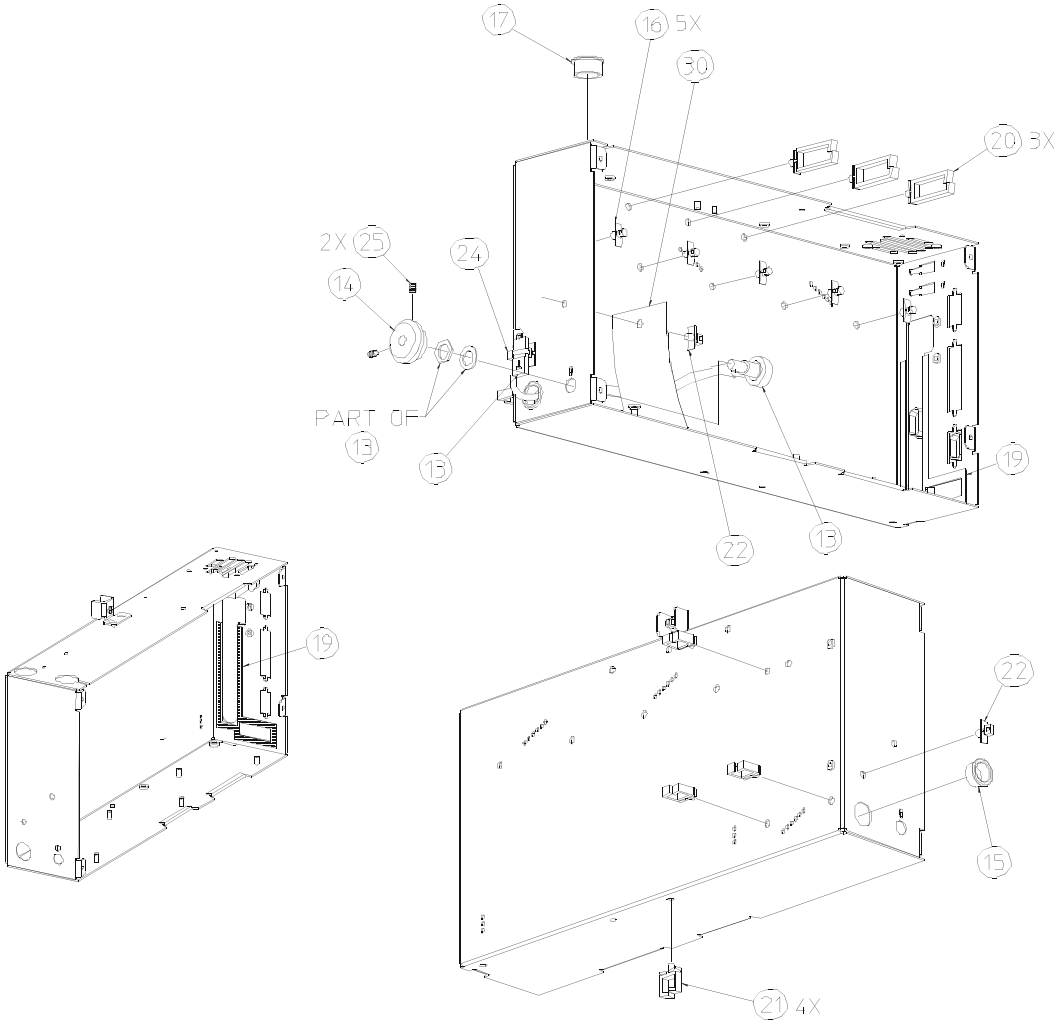

7.7.14 Power Table / Printer Assemblies

HUMPHREY SERIES 400 POWER TABLE (HPT4) - HFA II / with printer

ITEM	PART NUMBER	24-41200-112 120 Volt Slider International	24-41200-111 120 Volt Slider	24-41400-11 230 Volt Slider	24-41200-212 120 Volt Slider w/Printer International	24-41200-211 120 Volt Slider w/Printer	24-41400-21 230 Volt Slider w/Printer	DESCRIPTION
4	39992	1		1	1		1	Box, Ship, HPT 300, Slider
11	* 32336-25	4	4	4	4	4	4	Screw, M5x25 Soc Hd Cap
12	46209-120	1	1		1	1		Assy, Column, HPT 400-120, 2-STG
13	46209-230			1			1	Assy, Column, HPT 400-230, 2-STG
14	40038-120				1	1		Assy, Printer, Pwr Tbl -120
15	40038-230						1	Assy, Printer, Pwr Tbl -230
16	22581			1			1	Cord, Power, Euorcee 7/7 10A
17	22511	1	1		1	1		Cord, Power, Hosp Grd, 18GA, Gray
19	42080	1	1	1	1	1	1	Sheet, Instruct, Install Slider
21	39952				1	1	1	Bracket, Hook
22		1	1		1	1		Label, S/N, HPT 400, 120v
23	42050 Not shown	1	1	1	1	1	1	Cord, Pwr, 90°, LH, IEC, 320 6A 250v (Table to HFA II)
25				1			1	Label, S/N, HPT 400, 230v
27	* 30984-3	1	1	1	1	1	1	Wrench, Allen, 3mm, Ball Drive
28	46216-1	1	1	1				Assy, Switch Box, HPT4-1
29	46216-2				1	1	1	Assy, Switch Box, HPT4-2
32	24424	1	1	1	1	1	1	Fastener, Wire Clip
34	32346-16	6	6	6	6	6	6	Screw, M5 x 16, Soc HD, Btn
35	22101	6	6	6	6	6	6	Washer, Sq. Cone, .195/.433/.054
36	28295-30	1	1	1	1	1	1	Screw, M4 x 30, Soc HD, Cap
38	40034	2	2	2	2	2	2	Caster, HPT3

ASSY SWITCH BOX for SERIES 400 POWER TABLE				
ITEM	PART NUMBER	46216-1 HFA II w/o printer	46216-2 HFA II w/ printer	DESCRIPTION
1	40020-1	1		Box, Outlet, Power Table -1
2	40020-2		1	Box, Outlet, Power Table -2
5	13713	1	1	Plug, Hole, 050 PE
9	40001	2	2	Standoff, M3 x 19
11	32446		2	Nut, M3, Kep
12	07683	1	1	Tie, Anchor Mount
14	04043	1	1	Tie Wrap, 5.5" Long
15	* 24419	1	1	Switch, DPDT, M-OFF-M, 6A 1/8 HP, Panel
16	* 39962		1	Connector, CRC HV Receptacle, 6 pin
17	28283-12		2	Screw, M3 x 12, Soc HD, Btn
18	* 24418	1	1	Outlet, 10A 250v, Double Snap-in, IEC 320
20	* 42035	1	1	Terminal Block, 4 position, 5mm Bare Wire
24	32387	2	2	Washer, Lock, Int M4/8.0/0.5
26	32383	2	3	Washer, Split, M4/7.0/1.2
36	01441	3	8	Tubing, Shrink, Black, 1/8
37	24009	1	2	Terminal Ring, 22/16 #10
38	32447	3	4	Nut, M4, Kep
39	22506	3	3	Terminal, Spade, F 22/18, .187 x .032
41	32373	1	1	Washer, Flat, M4/9.0/0.8

REVISIONS			
REV	DESCRIPTION	DATE	APPROVAL
	SEE SHEET ONE		

SERIES 400 POWER TABLE

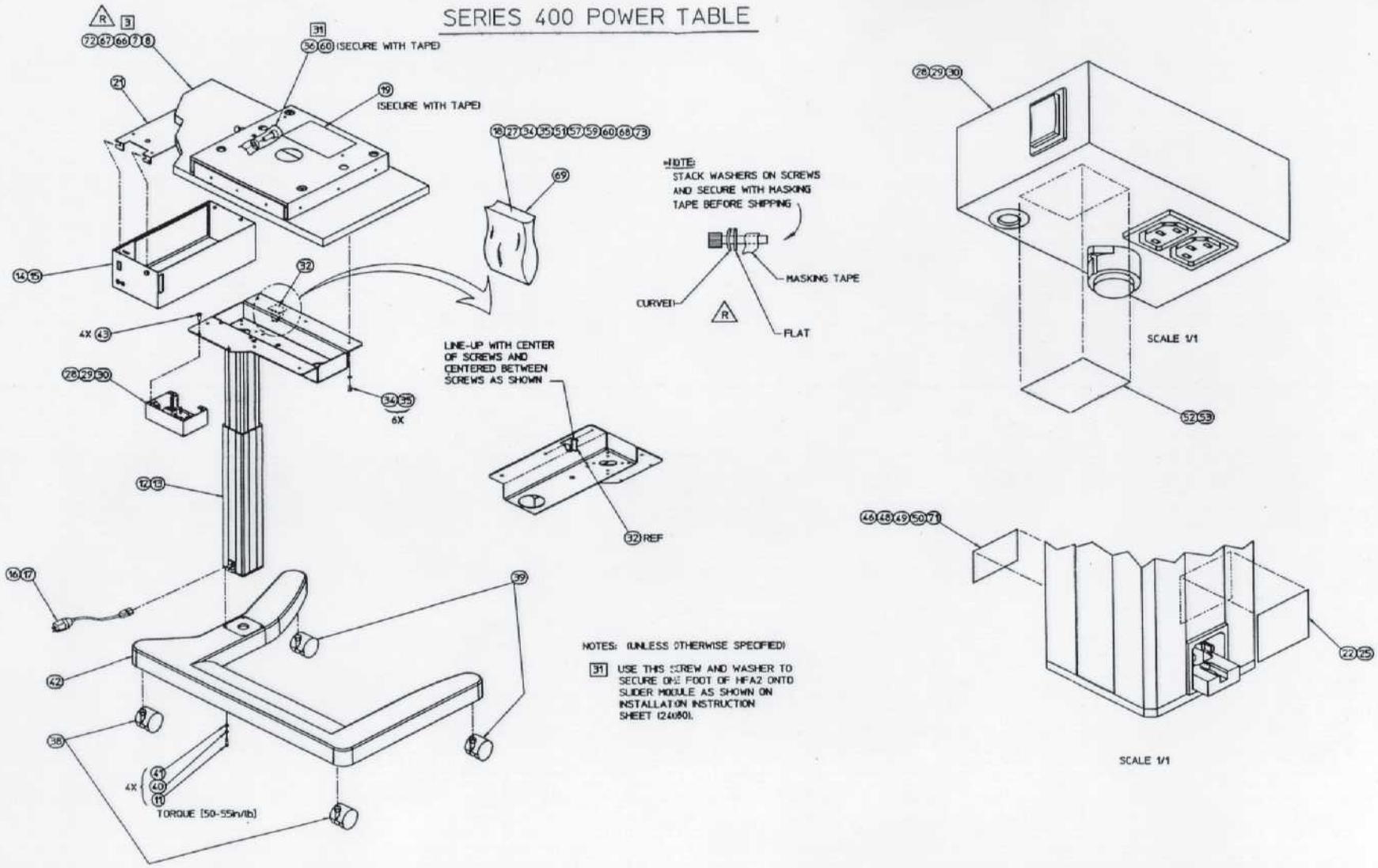

NOTES: (UNLESS OTHERWISE SPECIFIED)

31 USE THIS SCREW AND WASHER TO SECURE ONE FOOT OF HFA2 ONTO SLIDER MODULE AS SHOWN ON INSTALLATION INSTRUCTION SHEET (24080).

REVISIONS			
REV	DESCRIPTION	DATE	APPROVAL
A	INITIAL RELEASE PER ECO #5086	11-17-98	

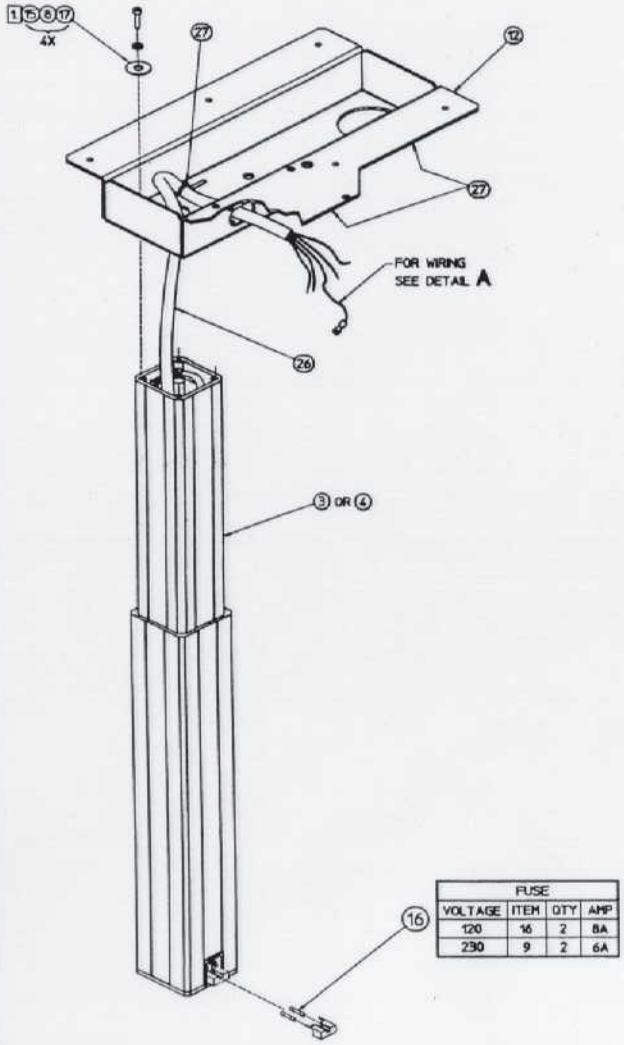

FUSE			
VOLTAGE	ITEM	QTY	AMP
120	16	2	8A
230	9	2	6A

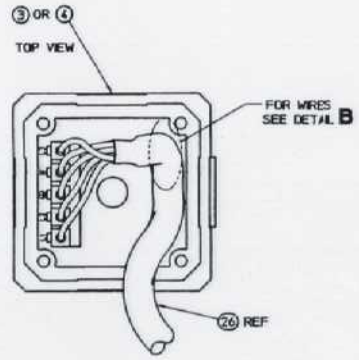

DETAIL A
SCALE: 1:1
POWER WIRING CONNECTIONS

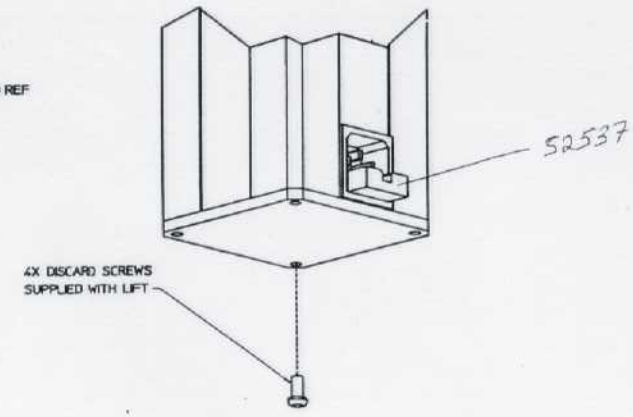

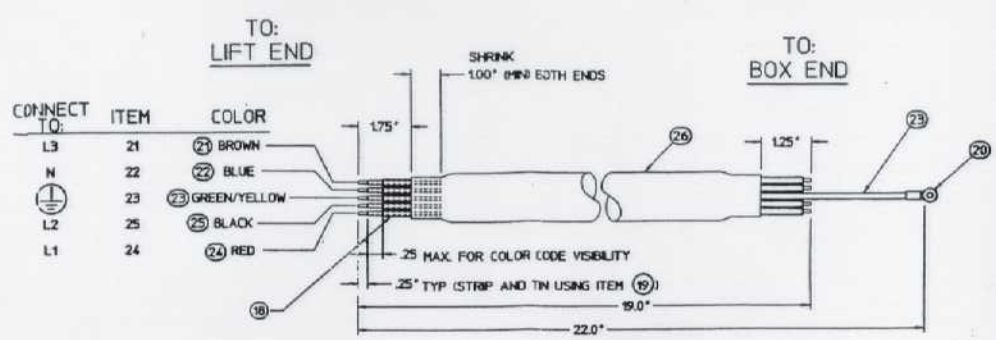

CONNECT TO:	ITEM	COLOR
L3	21	21 BROWN
N	22	22 BLUE
⏚	23	23 GREEN/YELLOW
L2	25	25 BLACK
L1	24	24 RED

DETAIL B
WIRE PREPARATION

TABULATION			
PART NUMBER	DESCRIPTION	VOLTAGE	REV
46209-TAB	ASSY COLUMN HPT 400-TAB 2-STG	TAB	A
46209-120	ASSY COLUMN HPT 400-120 2-STG	120	A
46209-230	ASSY COLUMN HPT 400-230 2-STG	230	A

ASSY SWITCH BOX for SERIES 400 POWER TABLE				
ITEM	PART NUMBER	46216-1 HFA II w/o printer	46216-2 HFA II w/ printer	DESCRIPTION
1	40020-1	1		Box, Outlet, Power Table -1
2	40020-2		1	Box, Outlet, Power Table -2
5	13713	1	1	Plug, Hole, 050 PE
9	40001	2	2	Standoff, M3 x 19
11	32446		2	Nut, M3, Kep
12	07683	1	1	Tie, Anchor Mount
14	04043	1	1	Tie Wrap, 5.5" Long
15	* 24419	1	1	Switch, DPDT, M-OFF-M, 6A 1/8 HP, Panel
16	* 39962		1	Connector, CRC HV Receptacle, 6 pin
17	28283-12		2	Screw, M3 x 12, Soc HD, Btn
18	* 24418	1	1	Outlet, 10A 250v, Double Snap-in, IEC 320
20	* 42035	1	1	Terminal Block, 4 position, 5mm Bare Wire
24	32387	2	2	Washer, Lock, Int M4/8.0/0.5
26	32383	2	3	Washer, Split, M4/7.0/1.2
36	01441	3	8	Tubing, Shrink, Black, 1/8
37	24009	1	2	Terminal Ring, 22/16 #10
38	32447	3	4	Nut, M4, Kep
39	22506	3	3	Terminal, Spade, F 22/18, .187 x .032
41	32373	1	1	Washer, Flat, M4/9.0/0.8

REVISIONS			
REV	DESCRIPTION	DATE	APPROVAL
A	INITIAL RELEASE PER ECO #0086	11-11-98	

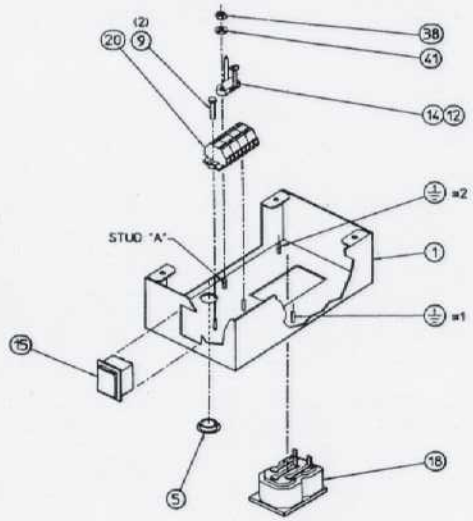

46216–1

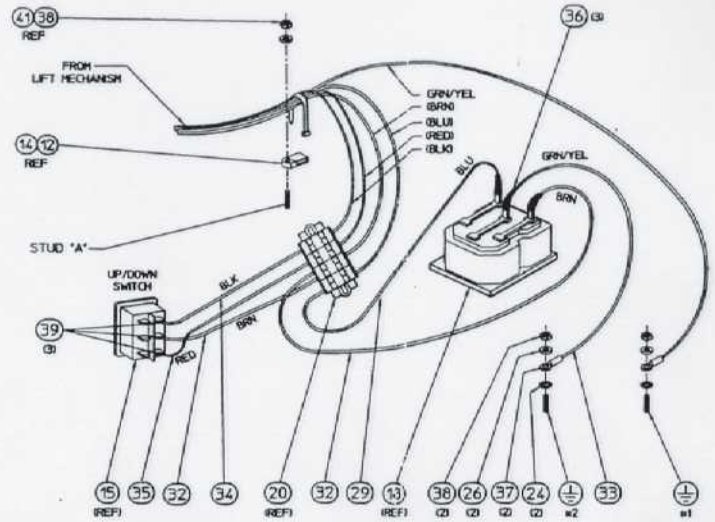

WIRING DIAGRAM

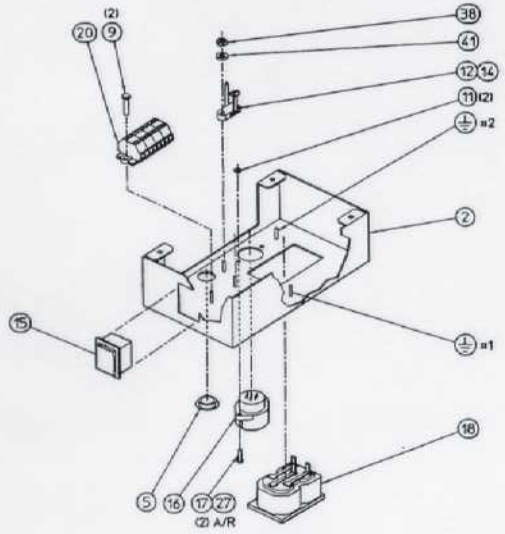

46216–2

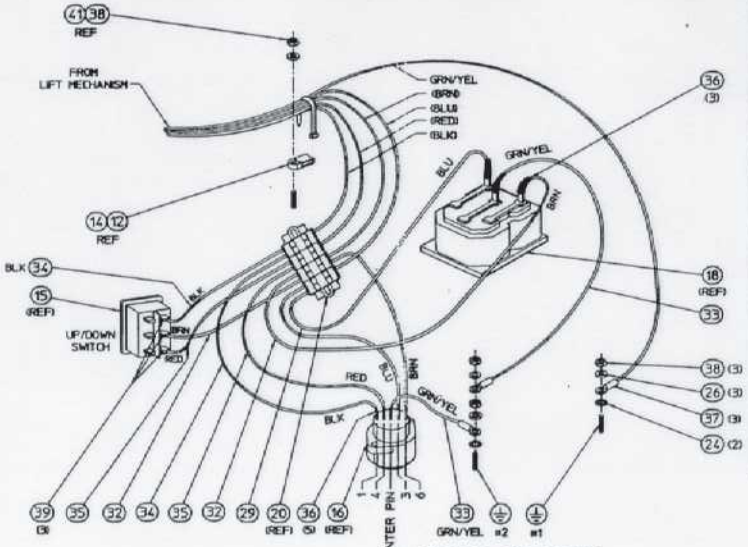

WIRING DIAGRAM

Appendices

Notes:

Appendix A. Tools, Test Equipment and Service Supplies

A.1 List of Tools, Test Equipment and Service Supplies

The tools and test equipment required for servicing the *HFA II - i* Perimeter are listed below.

Additional detail regarding the special tools and test equipment is provided in Section A.2.

Description	Part No.
Digital Multimeter, Fluke 8060A or equivalent	21566
Soligor Light Meter Kit	14905
Soligor Mount Adaptor (HFA I/II) (set of 2)	30248
Bowl Shroud	54710
Tool Stand Assembly:	30251
Trial Lens Alignment Adaptor	49647
Fake Eye	30079
Tool Stand	30137
Chinrest Mount	30135
Trial Lens Holder Height Adaptor	30183
Tool Stand Alignment Adaptor	30253
Mirror Tool	24501
Fore Head Rest Hook	49834
Extender Cables:	
Kit, Extender Cables	30172
Touchscreen extender cable	29616
Patient Support extender cable	30161
CPU-to-Floppy extender cable	30160
CPU JMPS-to-Motor Driver P11 extender cable	30163
CRT PCB/Brightness Control extender cable	29592
CRT Overlay	48952
Spot Positioning Cross Fixture	29868
Brightness Detector Alignment Target	30257
Projection Mount	30247
Operator Panel Extension/Support	49784
LED Assembly, Hard Drive	30126
Service Key	30141-2
* Diagnostic Support Tool, C3 (Disks, systems with MO Disk)	52945
* Diagnostic Support Tool, C3 (Disks, systems w/o MO Disk)	52910
* Software Tool HFA II -i BIOS	52847
Loopback Tool	28497

Static Protection Kit	20928
CPU PCB Installation Tool	52007
Metric Socket Set	(acquire locally)
Metric Ballpoint Hex (Allen) Key Set	(acquire locally)
Metric Ballpoint Drivers, 2mm, 2.5mm, and 3mm	(acquire locally)
Miscellaneous Hand Tools	(acquire locally)
Drafting Tape	(acquire locally)
Self-stick notes (small)	(acquire locally)
Calculator (with log function)	(acquire locally)
Pen Light (AAA battery size)	(acquire locally)
C-clamp, 3"	(acquire locally)
Mirror (hand-held)	(acquire locally)
Foil Tape, 1" width (specify length)	04525
Foam, adhesive-backed (specify length)	30213
RTV	00752
Loctite No. 222	01456
Clock oil	02534
Grease, Rheolube 362, 2 oz jar	08780

* - Refer to Software Timeline bulletin for most current part numbers

A.2 The Special Tools - What They Are / What They Do

A.2.1 Soligor Light Meter Setup

Figure A-2 shows proper setup of the Soligor light meter kit for use with the *HFA II - i*.

NOTE: *When used on the HFA II - i, the rectangular cutout on the flat portion of the Soligor mounting bracket points into the bowl. When the Soligor is used on the HFA I, the Soligor handle fits into the rectangular cutout, and it points away from the bowl.*

A.2.2 Soligor Mount Adaptor

Two angle brackets that allow the Soligor mount to be used on either HFA I or HFA II.

A.2.3 Bowl Shroud

A black shroud that drapes over the HFA and prevents ambient light from entering the bowl when performing light intensity measurements.

A.2.4 Trial Lens Alignment Adaptor

A cylindrical nose piece that attaches to the tool stand (Figure A-1). It is used in conjunction with the Trial Lens Holder Height Adaptor when verifying/adjusting the position of the trial lens holder.

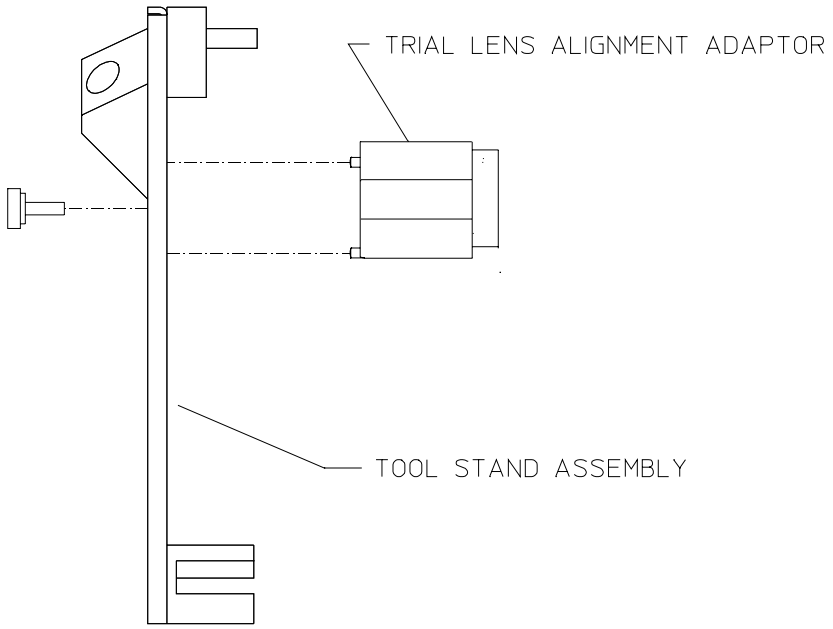

FIGURE A-1. Trial Lens Alignment Adaptor

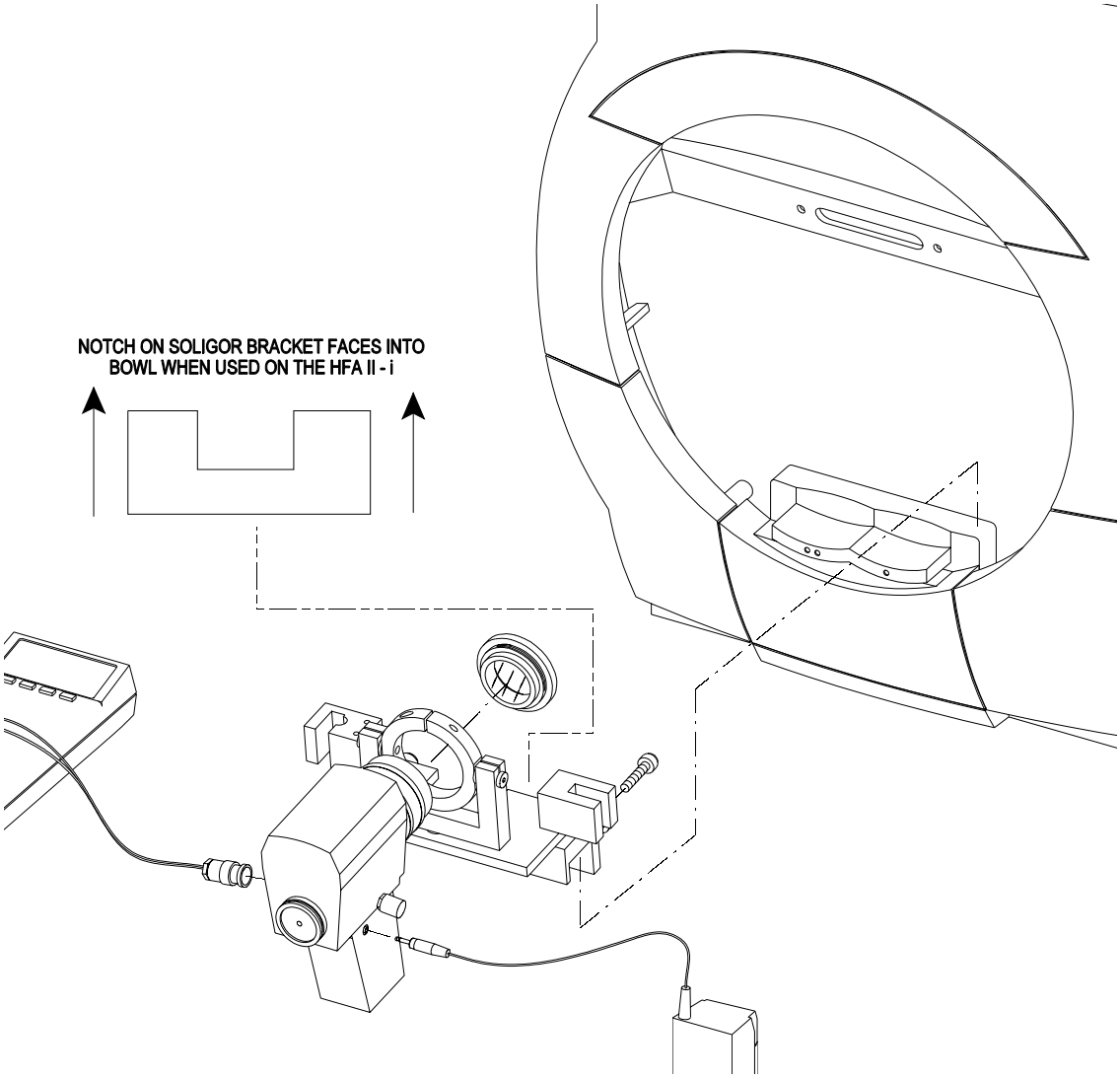

1) a) Mount the light meter to the chinrest (see Sec. A.2.1).
   b) Connect the DMM (20V DC scale) and the power supply to the light meter.
   c) Set the meter to the required position.
   d) Line up the light meter with the trial lens holder raised, then lower the trial lens holder.
   e) Aim the light meter to about 10 degrees above the Central Fixation hole.

2) If the light meter was off, let it warm up for 5 minutes.

3) Zero the light meter:
   a) Turn off the room lights.
   b) Set the light meter to position 3.
   c) Check and adjust the light meter (if needed) so that the DMM reads zero when the lens is completely blocked off. (Use the lens cap provided with the meter.)
   The tolerance is ±2 mv. (To adjust the light meter, turn the small screw in the handle of the meter.)

FIGURE A-2. Soligor Light Meter Setup

A.2.5 Fake Eye

A fixture with an imitation eye, gaze tracking alignment box, focus target, and trial lens holder Z-positioning stop (see Figure A-3). It is used in conjunction with the Tool Stand to perform the following:

- verify and set camera window position and size in relation to trial lens holder;
- verify and set gaze tracking;
- adjust camera focus;
- set the Z-position of the trial lens holder.

A.2.6 Tool Stand Assembly

Refer to Figure A-3.

Tool Stand and Chinrest Mount — A stand that attaches to the *HFA II - i* by means of the chinrest mount. The Tool Stand serves as a mounting base for a variety of calibration and adjustment tools.

Trial Lens Holder Height Adaptor — A block that attaches to the bottom of the Tool Stand to set the height of the Tool Stand when performing the Trial Lens Holder adjustment. The block is removed for all other adjustments requiring the Tool Stand.

Cold Mirror Alignment Adaptors — These two adaptors attach to the Tool Stand and are used in conjunction with a pen light to set the position of the Cold Mirrors.

Tool Stand Alignment Adaptor — A block with two extended pins that contact the forehead rest to set the correct Z (front-back) alignment of the Tool Stand when mounted on the chinrest.

Forehead Rest Hook — A hook that allows the Tool Stand to be held to the forehead rest.

A.2.7 Mirror Tool

The Mirror Tool is a small mirror that attaches to the center of the Tool Stand. The mirror is used only when setting the correction values for the blue stimulus.

A.2.8 CRT Overlay

A clear plastic template that is placed over the touch screen and is used as an aid to verify/adjust CRT symmetry.

A.2.9 Spot Positioning Cross Fixture

This is a horizontal and vertical target that mounts to the inside surface of the bowl. It is used to check the positional tolerances of the projected light spot within the bowl.

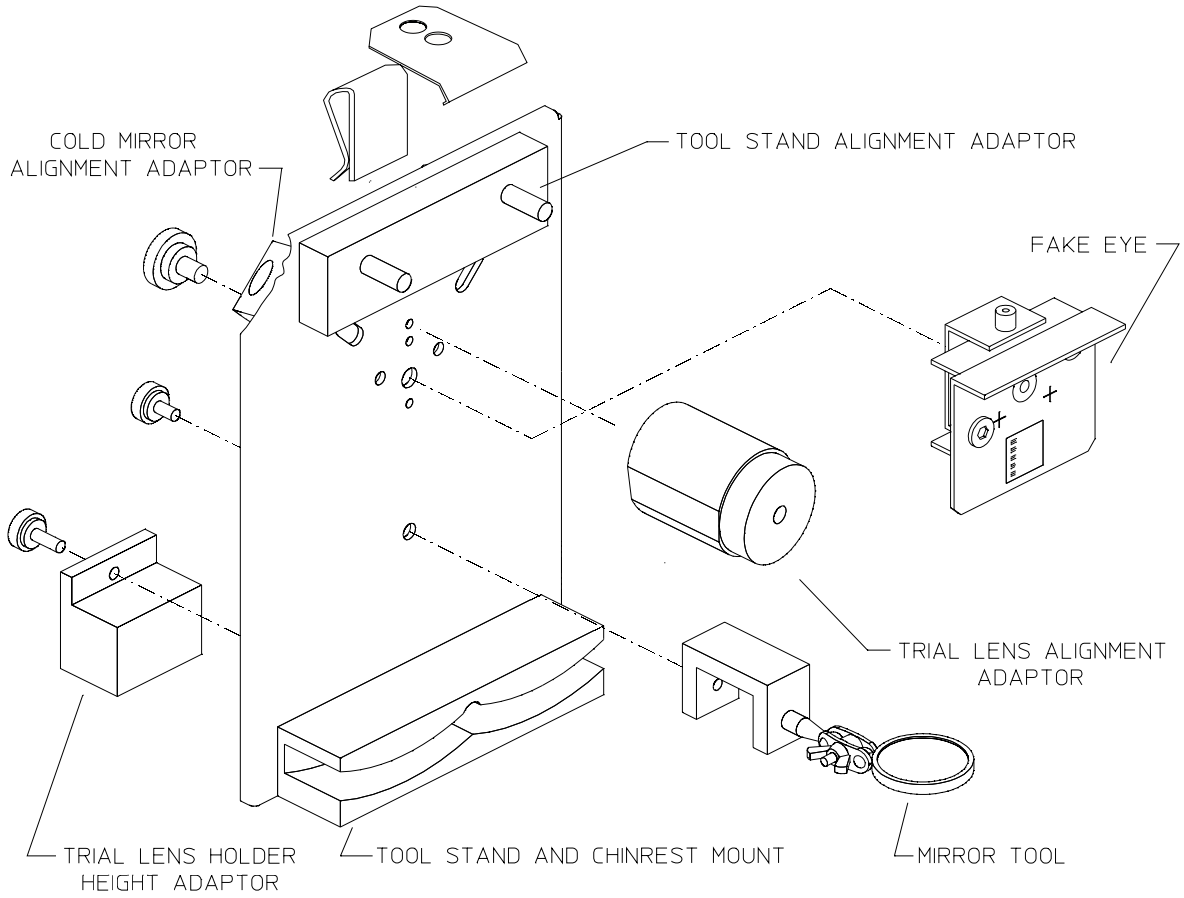

FIGURE A-3. Tool Stand Assembly

A.2.10 Brightness Detector Alignment Target

A small, cylindrical target that is placed into the detector housing when aligning the detector housing to a projected spot of light.

A.2.11 Projection Mount

A mounting stand that supports the projection assembly when removed from the HFA II. Holes are provided in the mount to accommodate both 1/4" and 3/8" carriage rails.

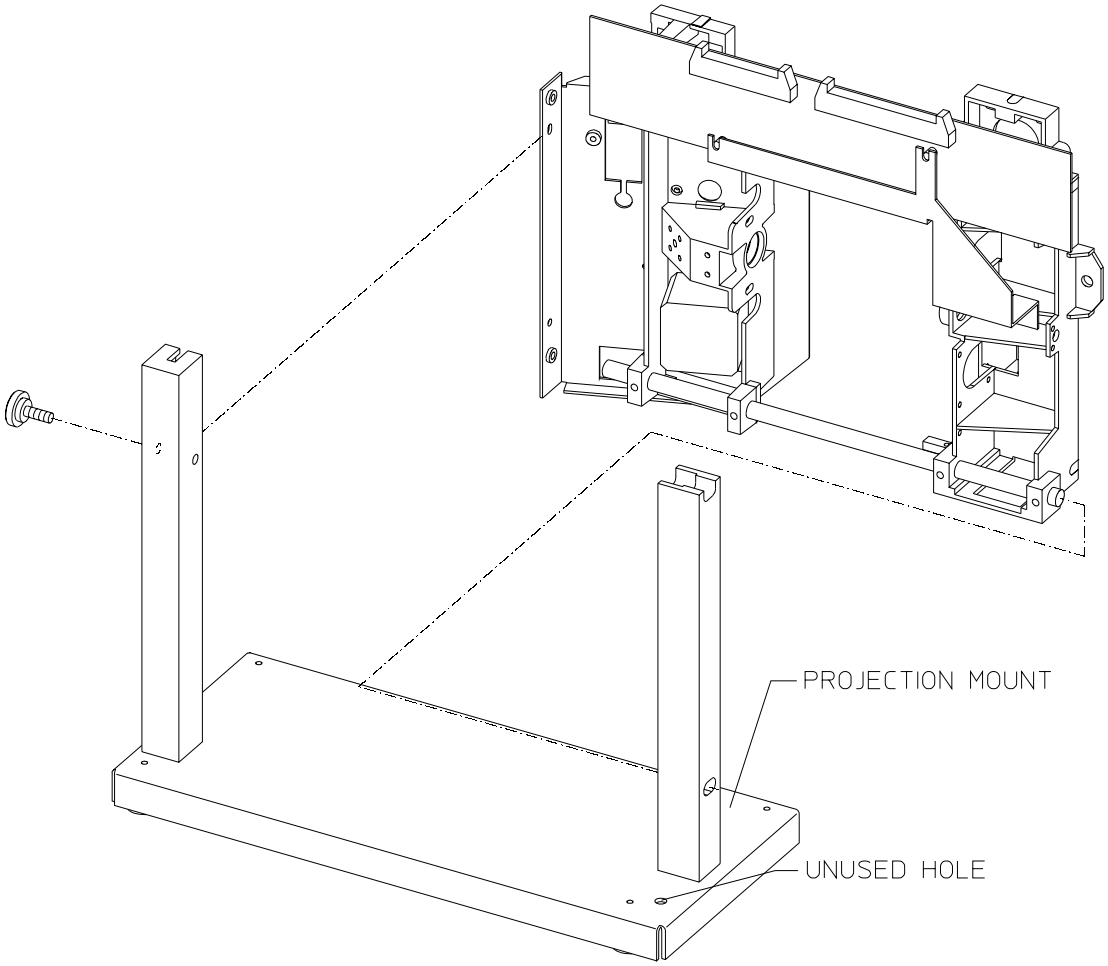

FIGURE A-4. Projection Mount Assembly

A.2.12 Operator Panel Extension/Support

A tool that extends and holds the operator panel, allowing access for CRT adjustments with power applied. The latest revision of this tool is adjustable to compensate for tables equipped with a slider.

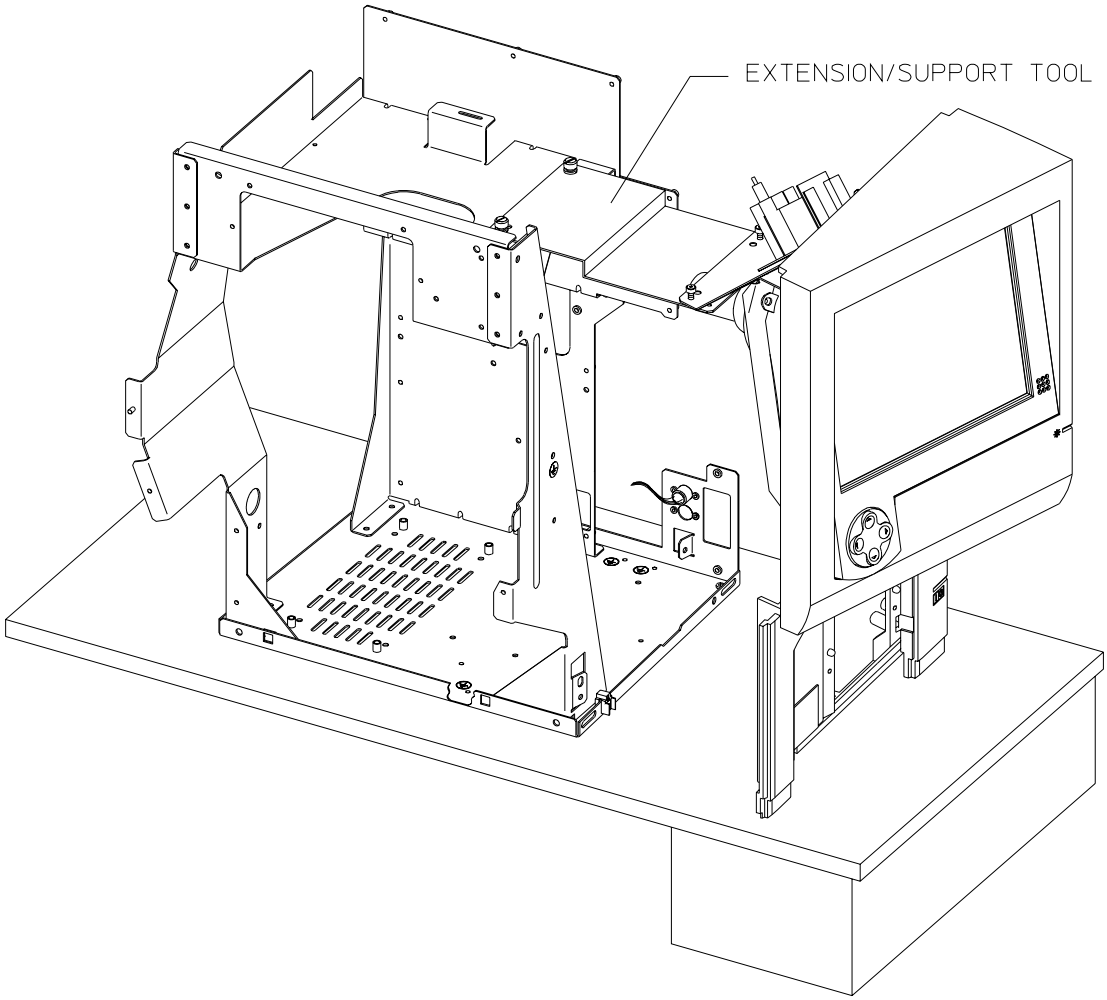

FIGURE A-5. Operator Panel Extension/Support

NOTE: *Early revisions of this tool are not adjustable. To compensate for the added height of the slider, a support spacer should be placed between the bottom of the operator panel and the table top.*

A.2.13 Hard Drive LED Assembly

An LED with cable and connector used as a hard drive go/no-go indicator.

A.2.14 Service Key

The Service Key is an electronic key, with memory, that can be plugged into the parallel port on the *HFA II - i*. The Service Key allows the service technician to perform service tasks such as initializing the EEPROM or setting the identity of the CPU (see Appendix G).

NOTE: *The service key is a proprietary element of Humphrey HFA II - i software security. As such, the key should be safeguarded and handled appropriately.*

A.2.15 Diagnostic Support Tool

The Diagnostic Support Tool (DST) is a set of three 3½" floppy disk that enables the service technician to perform system configuration, and numerous troubleshooting routines. The DST is designed as an open framework of menus and test functions, and can only be used in conjunction with the Service Key.

DST Startup Procedure:

1) With the instrument power turned OFF, insert the first DST diskette into the floppy drive.
2) Switch the instrument power ON. After approximately 3½ minutes, you will see `VxLd....` As time goes by the sequence of dots (periods) will increase. This indicates that the DST software is continuing to load.
3) After about one minute you will see the `Please Insert diskette #2 Press any key` message.
4) Remove diskette #1 and install diskette #2 in the drive. Press the space bar or any other keyboard key.
5) The next message displayed will be a `Copying file - /XXX/YYY` message, where the XXX and YYY represent different segments of the DST code.
6) After about one minute you will see the `Please Insert diskette #3 Press any key` message.
7) Remove diskette #2 and install diskette #3 in the drive. Press the space bar or any other keyboard key.
8) The next message displayed will be a `Copying file - /XXX/YYY` message, where the XXX and YYY represent different segments of the DST code.
9) An on-screen message will instruct you to install the Service Key.
10) Install the Service Key into the printer port at the back of the instrument, then select the on-screen OK button.
11) When the alphanumeric keyboard appears, type in the Calibration password, then select `Enter`. The Diagnostic Support Tool Main Menu will appear.

A.2.16 Loopback Tool

The Loopback Tool performs external loopback testing of the Data Transfer and Auxilary serial ports located on the side of the CPU/Backplane enclosure box behind the rear cover door. The connector loops the transmit line back to the receive line, and the RTS line back to the CTS line.

A.2.17 Static Protection Kit

The Static Protection Kit is essential for protection of the *HFA II - i* Perimeter against electrostatic discharge whenever you are disassembling or handling *HFA II - i* Perimeter circuitry. The kit contains the following items:

- a bench mat with permanently attached alligator clip ground lead;
- a banana plug lead with snap connector;
- an adjustable wrist cuff.

The static protection kit's bench mat must be properly grounded, and you must be wearing the wrist cuff whenever working on the *HFA II - i* Perimeter with the cover removed.

To use the static protection kit:

1) Connect the bench mat alligator clip to a known good electrical ground point. Any unpainted screw or chassis surface on the *HFA II - i* Perimeter is an acceptable ground point, ***provided that the HFA II - i Perimeter has its power cord connected and is plugged into a grounded power receptacle.***

   In situations where work is to be performed on the *HFA II - i* and it is undesirable to have the unit plugged into a power receptacle, an alternate grounding point is necessary. Usually, an acceptable ground point can be found at the cover screw for the AC power outlet. It is useless to use the bench mat without it being properly grounded.

2) After properly grounding the bench mat, connect the banana plug lead into the bench mat connector.

3) Connect the wrist cuff to the snap clip on the banana plug lead.

4) Adjust the wrist cuff to fit snugly around your wrist. The wrist cuff should always be worn when working on the *HFA II - i* Perimeter with the cover removed.

A.2.18 Communications Terminals/Laptop

Communication Terminal/Laptop usage with the *HFA II - i* is not possible.

A.2.19 How To Set Up The P-Factor Diskette

A *"Read P Factors"* button has been added to the **Light Intensity** menu. Selecting the *"Read P Factors"* button from the **Light Intensity** menu causes the Soligor meter calibration P factor values to be read from a disk (located in the *HFA II - i* floppy drive) and entered into the menu. The Service Engineer must create the Soligor meter calibration P factors disk. The P Factors disk is created by copying a file with the name **"pfactors.cfg"** on a DSHD floppy disk. The file will contain the Soligor meter P calibration factors for the representative's meter. A sample file is shown below. Save the file as an ASCII text file. Lines beginning with **'#'** are comments and are ignored by the program. You must use all capital letters and the delimiter between the meter and the serial number, all of the factors, and all of the factor values must be a TAB. As an example for the meter, you would need to type *METER**(TAB)**1935*, where ***(TAB)*** represents pressing the TAB key.

WARNING: *You must update your P Factors disk whenever your light meter is recalibrated or replaced. Label and Date the P Factors disk.*

```
##################################
# pfactors.cfg
# Configuration file for MBC module to help enter lightmeter
# P Factors and Meter serial number
METER 1935
P1 393.32
P2 36.282
P3 8.187
P3B 6.849
P3Y 8.218
P3F 7.812
```

(This page left intentionally blank)

Appendix B. The Interface Ports

> ***NOTE:*** *The interface ports on the Humphrey HFA II - i Perimeter* ***ARE NOT*** *intended for interfacing the instrument with any other equipment, except as described below.*

B.1 General Information

The Humphrey *HFA II - i* Perimeter provides several interface connectors, most of which are located on the main connector panel (see Figure B-1). The patient switch connector is located elsewhere on the instrument, as noted below. The following list briefly explains the intended use of each connector.

NOTE: *The notation shown in parentheses indicates the corresponding connector designation that appears on the CPU /Backplane Enclosure.*

- VGA (EXT VGA) - This 15-pin interface port is used to connect an external VGA color monitor.
- Network (NETWORK) - This interface port is a ethernet 10BASET 8-pin connector used to connect Ensemble via a network.
- PRINTER (PRINTER) - This interface port is used to connect an external printer. It is a 25-pin, Centronics-compatible, parallel port.
- SERIAL PORT (DATA TRANSFER) - This port is used to transfer data from HFA I and *HFA II - i*. This port is used to send data to StatPac For Windows or Ensemble. This port is not intended for, and does not support, connections to or from: communications terminal for service and error message retrieval or medical records programs.
- SERIAL PORT (AUX.) - This port is not used by customer, service, or manufacturing. It is to be covered with a cap.

  Interface hardware and pin assignments for the RS-232 serial ports are identified in Section B.2.
- USB PORTS (USB) - These ports are intended for connection to USB devices at a later date.
- VGA (UNUSED) - This port is not used by customer, service, manufacturing or software engineering. It will not function and is to be covered with a cap.
- Keyboard (KEYBOARD) - This interface port is used to connect a keyboard with a PS2 connector.

- Mouse (MOUSE) - This port is used to connect a serial pointing device such as a glide pad, mouse or trackball.

Located elsewhere on the instrument:

- (JPATSW) - This interface port is used to connect the patient response switch.

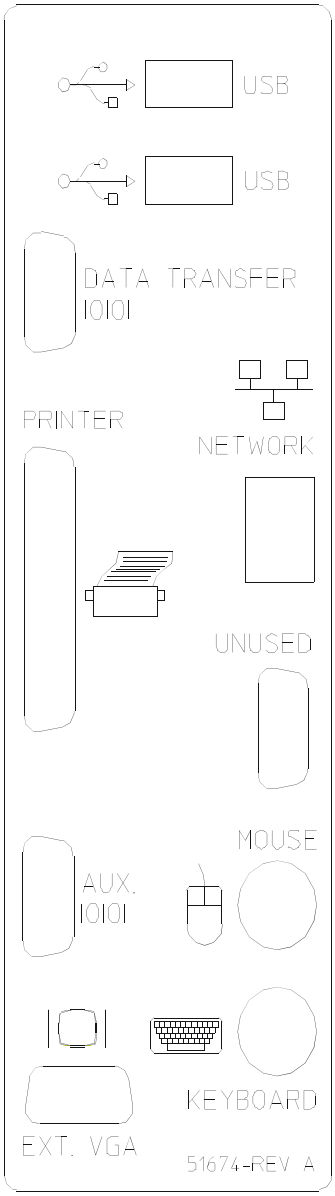

FIGURE B-1 Interface Connector Panel

B.2 RS-232 Interface Hardware and Pin Assignments

NOTE: *Carl Zeiss Meditec provides this information as a courtesy to our customers, and for the use of authorized Service personnel. Carl Zeiss Meditec does not assume any responsibility for interfacing or providing software to the customer for use of the RS-232 interface with non-Carl Zeiss Meditec external devices.*

The RS-232 interface connectors on the *HFA II - i* are DB-9F 9-pin sockets. This requires a Cannon DB-9P, or equivalent, mating connector on the interface cable. For reliable data transfer, the interface cable length should be kept as short as possible. Maximum length allowed is 50 feet.

The pin assignments at the *HFA II - i* RS-232 output port are detailed below.

Pin 1 - Data Carrier Detect
(Input) No Connection.

Pin 2 - Received Data (RX)
(Input) Used to receive data from the external system.

Pin 3 - Transmitted Data (TX)
(Output) Used to transmit information asynchronously using ASCII code. The data format, comprising data bits, parity, and stop bit(s), is determined by user-defined selections. The output goes from -12 volts to +12 volts, in the form of pulses, depending on the data being transmitted.

Pin 4 - Data Terminal Ready (DTR)
(Output) Is connected internally with pin 7 (RTS). Both signals are TRUE whenever the instrument is powered up and ready for operation.

Pin 5 - Signal Ground (GND)
Ground reference for the electronic circuits.

Pin 6 - Data Set Ready (DSR)
(Input) (no connection)

Pin 7 - Request To Send (RTS)
(Output) Is connected internally with pin 4 (DTR). Both signals are TRUE whenever the instrument is powered up and ready for operation.

Pin 8 - Clear To Send (CTS)
(Input) This signal must be TRUE to enable output transmission from the *HFA II - i*. This signal is usually set to TRUE permanently, or in response to "Request To Send" when the external data system's receive circuit is ready.

Pin 9 - Ring Indicator (RI)
(Input) (no connection)

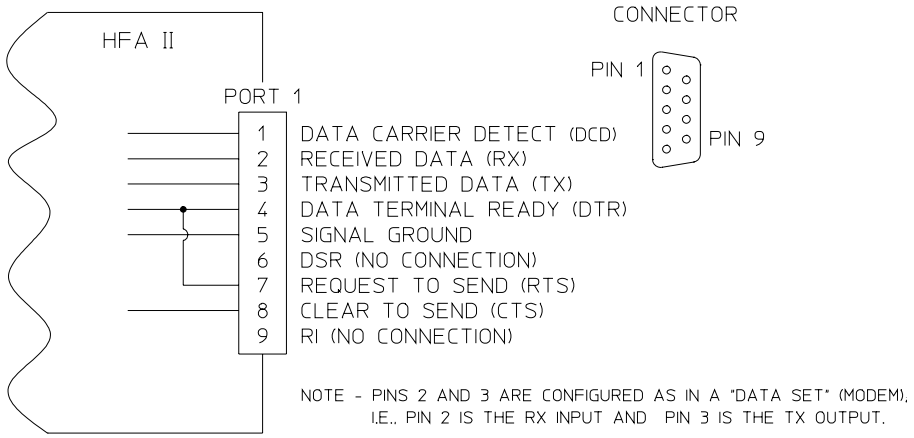

FIGURE B-2. Serial Port Connector Pinout

Appendix C. Data Transfers

There may be a need to transfer patient data between an HFA I (600 Series) instrument and an *HFA II - i* (700 Series) instrument. Transfer of data between an HFA I and *HFA II - i* can only be accomplished via a serial data transfer. See transfer modes below for details.

C.1 Serial Transfer Modes

The HFA II - i is capable of serial data transfer in two transfer modes:

1. Serial I transfer mode will not transfer gaze data or SITA test data. It is primarily designed to transfer only HFA I exam data.

2. Serial II transfer mode will transfer SITA test and gaze data. It is designed to transfer both HFA I, HFA II, or HFA II – i data. This mode must be used if the instrument is exporting data to Ensemble software.

The HFA II – i can only be set to one transfer mode. The transfer disks work like a toggle, turning on either mode I or mode II.

The Serial II disk is protected. Once the disk has been loaded on a specific instrument, it cannot be loaded on any other instrument. If you are using the serial transfer disk for the first time, write the serial number of the instrument on the label of the disk. This will help prevent failures associated with trying to load the serial transfer disk on another instrument. If required, you can reuse the serial disk again on the same instrument.

NOTE: *Attempts to load the Serial II disk on any instrument other than the instrument that it was installed on will result in failure.*

Transfer Type	HFAII - i Mode
HFA I to HFAII - i	*Either Mode*
HFA II - i to HFA II	*Serial I Mode*
HFA II to HFA II - i	*Either Mode*
HFA II - i to STATPAC for Windows	*Serial I Mode*
HFA II - i to Ensemble	*Serial II Mode*
HFA II - i to HFA II - i	*Either Mode*

TABLE C-1. Transfer Modes

TESTS THAT CAN BE TRANSFERRED USING EITHER SERIAL I OR II TRANSFER MODE:

1. Macula
2. Central 10-2 Threshold
3. Central 24-2 Threshold
4. Central 30-2 Threshold
5. Peripheral 60-4 Threshold
6. Nasal Step Threshold
7. Armaly Central Screening
8. Armaly Full Field Screening
9. Nasal Step Screening
10. Central 40 Screening
11. Central 76 Screening
12. Central 80 Screening
13. Peripheral 68 Screening
14. Full Field 81 Screening
15. Full Field 120 Screening
16. Full Field 246 Screening
17. Blindengeldgutachten (German visual disability test)
18. Fuehrerscheingutachten (German driver's license test)
19. Esterman Monocular
20. Esterman Binocular
21. Kinetic Tests (Serial II mode only)

TESTS THAT WILL NOT BE TRANSFERRED USING EITHER SERIAL I OR II TRANSFER MODE:

Fast Threshold tests or Master files.

- Compared, Averaged, or Merged exams.
- Tests without birthdates, or with invalid birthdates.
- Tests with invalid test dates.
- Tests without **LEFT** or **RIGHT** denoted in eye field.
- Tests that have invalid (x,y) coordinates for test points.

C.2 Installing the Serial I or the Serial II Transfer Disk

Installing the Serial I or the Serial II Transfer Disk can be done by the customer or service engineer.

1) Starting at the Main Menu, select the Setup icon.

2) Select the Additional Setup menu.

3) Select Install Software.

4) When the "Insert an HFA optional software floppy disk then pres OK to begin installation" dialogue appears, insert the Serial I Transfer disk or the Serial II Transfer disk and press the OK button.

5) When the "Installing Revision XXX" Press OK to Continue" dialogue appears, press OK.

6) After a few seconds the "Optional software installation successful" dialogue appears, Press OK.

NOTE: *It is not necessary to restart the instrument for the new software to become active. The new features will become active after installation.*

C.3 HFA I to *HFA II - i* Serial Data Transfer

1) For HFA models 605 - 611 "Plus" and 620 - 630, allow up to 10 minutes per floppy disk to transfer files from the HFA I to the *HFA II - i*.

2) For HFA models 635 and 640, approximately 1700 patient files can be transferred from the hard disk per hour.

File Transfer Preparation

In order to transfer data files from the HFA I to the *HFA II - i*, the following procedure *MUST* be followed. (Refer to the *HFA II - i* User's Guide for the data transfer setup instructions.)

1) Perform a rebuild on the HFA I hard disk drive. This will properly sort the directory and correct or remove corrupted files. To perform the rebuild function:
   a) Select `Configuration Menu` from the main menu.
   b) Select `Rebuild Hard Disk Directory and Recover Files.`
   c) Select `Yes`. This procedure will take about 60 minutes per 1,000 files to complete.
2) Check all patient records for the following:
   a) Each patient record on the diskette or hard disk *MUST* have the patient name and birthdate entered. If the patient name or birthdate is missing, the transfer process will ignore the file and the file will not be transferred.
   b) All patient names *MUST* be entered exactly as they were. If not, the patient record is treated as a completely different patient. This means that records for a particular patient could be scattered all over the directory.
3) Once the rebuild function has been completed and the patient records have been checked, perform a hard disk-to-tape backup. To perform this function:
   a) Select `Disk Functions` from the main menu.
   b) Select `Tape Functions.`
   c) Select `Back Up Entire Hard Disk To Tape.`
   d) Select `Yes`. The backup will take about 35 minutes for 12,000 files.
4) Once the hard disk-to-tape backup has been completed, immediately perform a compare tape-to-hard disk. To perform the compare function:
   a) Select `Disk Functions` from the main menu.
   b) Select `Tape Functions.`
   c) Select `Compare Tape To Hard Disk.`
   d) Select `Yes`. The compare takes the same amount of time as the backup.
5) The data transfer can now be performed.

Data Transfer Procedure

By using the special transfer software chip(s), the *ENTIRE* contents of the HFA I hard disk or floppy disk can be transferred to the *HFA II - i* at one time.

Without the special transfer software chip(s), a manual file selection will need to be done to transmit files to the *HFA II - i*. For a unit with a hard disk, a maximum of 250 files can be selected and transmitted at a time. All 250 files must be manually highlighted prior to transmission. For a unit with a floppy disk, a maximum of 100 files can be selected and transmitted at a time. All 100 files must be manually highlighted prior to transmission.

There is one serial port designated for data transfer (DATA TRANSFER) behind the rear cover door of the *HFA II - i*. Use the DATA TRANSFER port for file transmission.

On the *HFA II - i*:

1) From the main menu, select `File Functions`

2) Select `Transfer`.

3) Select `HFA Serial Cable` as the Source.

4) Choose `Hard` or `Floppy` as the Destination, then `Proceed`.

On the HFA I:

5) From the main menu, select `Configuration`.

6) Make sure the baud rate is set to 9600 and the parity is set to EVEN on the configuration screen, then select `Enter` (to the main menu).

7) Select `Disk Functions`.

8) Select `Transmit Files`.

9) Choose `Hard` or `Floppy` as the file source drive.

10) For a restrictive file search, enter a patient's name on the keyboard, then `Enter`. To retrieve the entire directory, select `Enter` without entering a name.

11) If you want to transmit selected files, highlight the file(s) you want to transmit. If you intend to transmit all files shown on the directory, do not highlight any files. ***STOP HERE!*** Do Not choose `Selection Complete`.

On the *HFA II - i*:

12) After reading the on-screen message, select `Selection Complete` on the HFA I.

13) Select `Cancel` when all files have been transmitted. If you leave the system idle for ten minutes after the transfer of the data, the instrument will automatically terminate the transfer process.

C.4 HFA II To *HFA II - i* Serial Data Transfer

Transfer of serial data from the HFA II to *HFA II - i* is possible in both Serial I transfer mode and Serial II transfer mode. However, you must have the *HFA II - i* and the HFA II set to the Serial II transfer mode to ensure that all of the test information (SITA and gaze data) is passed to the *HFA II - i*.

Transmitting HFA II Tests to *HFA II - i*

1) Ensure that the Serial II Transfer Disk is loaded on the HFA II. Check the destination window of the Transfer Files selection on the File Functions Menu. If not, load the Serial II Transfer Disk as described in Appendix section C.2.

2) Ensure that the data transfer cable is connected between the *HFA II - i* DATA TRANSFER port and the HFA II SERIAL PORT 1.

On the HFA II

3) From the Main Menu, select `System Setup`.

4) Select the `Save/Transmit` option.

5) Select `RS-232 Options`.

6) On the RS-232 Options screen, select the following settings:
   A) Set Baud Rate to 9600
   B) Parity to Even
   C) Data Bits to 7
   D) Stop Bits to 1

7) Press `Proceed`. The Transmit/Save screen will then appear.

8) Press the `Main Menu icon` in the upper right corner of the screen.

9) From the Main Menu, select `File Functions`.

10) Select `Transfer Tests`. A dialog box titled “Disk Options” will appear on screen.

11) Select `Hard Drive` as the Source.

12) Select `HFA II Serial Cable` as the Destination.

13) Select the `Directory Order` (either `Name` or `Date`), then press `Proceed`.

    - If you chose `Name`:

    To select all files on the drive, press `Enter`, and `Select All`. All files on the disk will be marked with a “✓” to indicate that they have been selected.

- If you search files by patient name:

Enter the name - or just the first few characters - of the patient's last name whose test(s) you wish to transfer. Select the test(s) you wish to transfer. All files selected will be marked with a "✓" to indicate that they have been selected.

- If you chose Date:

The file directory will be displayed in reverse chronological order. Enter a specific date (mm-dd-yyyy), then choose `Enter`. The file directory will display tests taken on the date you selected. Select the test(s) you wish to transfer. All files selected will be marked with a "✓" to indicate that they have been selected.

14) Press `Proceed`. A pop up dialog box will appear advising you of the number of tests selected to be transferred. ***STOP HERE!*** Do Not choose `Yes` to start the transfer process.

On the *HFA II - i*:

15) From the Main Menu, select `System Setup`.

16) Select the `Save/Transmit` option.

17) Select `Serial Receive` option.

18) On the `RS Receive Setup` options screen, select the following settings:
    A) Set Baud Rate to 9600
    B) Parity to Even
    C) Data Bits to 7
    D) Stop Bits to 1

19) Press `Proceed`. The Transmit/Save screen will then appear. Press `Proceed`.

20) The `System Setup` menu will appear.

21) From the `System Setup`, select `File Functions`.

22) Select `Transfer Tests`.

23) Select `HFA Serial Cable` as the Source.

24) Choose `Hard` or `Floppy` as the Destination, then `Proceed`.

On the HFA II

25) To proceed, select `YES`.

26) After all tests are transmitted, a pop up dialog box will appear advising you of the number of tests that were successfully transferred.

27) Press the `Main Menu` icon to exit this function.

C.5 *HFA II - i* To *HFA II - i* Serial Data Transfer

Transfer of serial data from the *HFA II - i* to *HFA II - i* is possible in both the Serial I transfer mode and Serial II transfer mode. You must have both of the *HFA II - i* units in the Serial II transfer mode to ensure that all of the test information is passed to the *HFA II - i*.

Transmitting *HFA II - i* Tests to *HFA II - i*

1) Ensure that the Serial II Transfer Disk is loaded on both instruments. Check the destination window of the Transfer Files selection on the File Functions Menu. If not, load the Serial II Transfer Disk as described in Appendix section C.2.

2) Ensure that the data transfer cable is connected between the transmitting *HFA II - i* DATA XFER port and the receiving *HFA II - i* DATA XFER port.

Note: *When the HFA II-i is receiving data, it can distinguish between serial modes automatically.*

On the Transmitting *HFA II - i*

3) From the Main Menu, select `System Setup`.

4) Select the `Save/Transmit` option.

5) Select `RS-232 Options`.

6) On the RS-232 Options screen, select the following settings:
   A) Set Baud Rate to 9600
   B) Parity to Even
   C) Data Bits to 7
   D) Stop Bits to 1

7) Press `Proceed`. The Transmit/Save screen will then appear.

8) Press the `Main Menu icon` in the upper right corner of the screen.

9) From the Main Menu, select `File Functions`.

10) Select `Transfer Tests`. A dialog box titled “Disk Options” will appear on screen.

11) Select `Hard Drive` as the Source.

12) Select `HFA II Serial Cable` as the Destination.

13) Select the `Directory Order` (either `Name` or `Date`), then press `Proceed`.

- If you chose `Name`:

To select all files on the drive, press `Enter`, and `Select All`. All files on the disk will be marked with a "✓" to indicate that they have been selected.

- If you search files by patient name:

Enter the name - or just the first few characters - of the patient's last name whose test(s) you wish to transfer. Select the test(s) you wish to transfer. All files selected will be marked with a "✓" to indicate that they have been selected.

- If you chose Date:

The file directory will be displayed in reverse chronological order. Enter a specific date (mm-dd-yyyy), then choose `Enter`. The file directory will display tests taken on the date you selected. Select the test(s) you wish to transfer. All files selected will be marked with a "✓" to indicate that they have been selected.

14) Press `Proceed`. A pop up dialog box will appear advising you of the number of tests selected to be transferred. ***STOP HERE!*** Do Not choose `Yes` to start the transfer process.

On the Receiving *HFA II - i*:

15) From the Main Menu, select System Setup.

16) Select the Save/Transmit option.

17) Select RS-232 Options.

18) On the RS-232 Options screen, select the following settings:
    A) Set Baud Rate to 9600
    B) Parity to Even
    C) Data Bits to 7
    D) Stop Bits to 1

19) Press Proceed. The Transmit/Save screen will then appear.

20) Press the Main Menu icon in the upper right corner of the screen.

21) From the main menu, select File Functions

22) Select Transfer.

23) Select HFA II Serial Cable as the Source.

24) Choose Hard or Floppy as the Destination, then Proceed.

On the Transmitting *HFA II - i*

25) To proceed, select YES. After all tests are transmitted, a pop up dialog box will appear advising you of the number of tests that were successfully transferred.

26) Press the Main Menu icon to exit this function.

C.6 *HFA II - i* To Ensemble© Serial Data Transfer

Data will normally be transmitted from the *HFA II - i* to an Ensemble PC via the network interface. As a temporary means of data transfer or as a troubleshooting technique, serial data transfer from the *HFA II - i* to Ensemble is possible. Data can be transferred in both the Serial I transfer mode and the Serial II transfer mode. You must have the *HFA II - i* in the Serial II transfer mode to ensure that all of the test information is passed to the Ensemble program.

Transmitting *HFA II - i* Tests to Ensemble

1) Ensure that the Serial II Transfer Disk is loaded. Check the destination window of the Transfer Files selection on the Files Functions Menu. If not, load the Serial II Transfer Disk as described in Appendix section C.2.

2) Ensure that the data transfer cable is connected between the *HFA II - i* DATA TRANSFER port and the appropriate serial port of the Ensemble computer. See the Ensemble documentation for details.

3) Ensure that Ensemble is prepared to accept data from the *HFA II - i*. See the Ensemble documentation for details.

4) From the Main Menu, select `System Setup`.

5) Select the `Save/Transmit` option.

6) Select `RS-232 Options`.

7) On the RS-232 Options screen, select the following settings:
   A) Set Baud Rate to 9600
   B) Parity to Even
   C) Data Bits to 7
   D) Stop Bits to 1

8) Press `Proceed`. The Transmit/Save screen will then appear.

9) Press the `Main Menu` icon in the upper right corner of the screen.

10) From the `Main Menu`, select `File Functions`.

11) Select `Transfer Tests`. A dialog box titled “Disk Options” will appear on screen.

12) Select `Hard Drive` as the Source.

13) Select `HFA II Serial Cable` as the Destination.

14) Select the `Directory Order` (either `Name` or `Date`), then press `Proceed`.

- If you chose `Name`:

To select all files on the drive, press `Enter`, and `Select All`. All files on the disk will be marked with a "✓" to indicate that they have been selected.

- If you search files by patient name:

Enter the name - or just the first few characters - of the patient's last name whose test(s) you wish to transfer. Select the test(s) you wish to transfer. All files selected will be marked with a "✓" to indicate that they have been selected.

- If you chose Date:

The file directory will be displayed in reverse chronological order. Enter a specific date (mm-dd-yyyy), then choose `Enter`. The file directory will display tests taken on the date you selected. Select the test(s) you wish to transfer. All files selected will be marked with a "✓" to indicate that they have been selected.

15) Press `Proceed`.

A pop up dialog box will appear advising you of the number of tests selected to be transferred.

16) If you wish to proceed, select `YES`.

After all tests are transmitted, a pop up dialog box will appear advising you of the number of tests that were successfully transferred.

17) Press the `Main Menu` icon to exit this function.

C.7 *HFA II - i* To Third Party Programs Serial Data Transfer

Transfer of serial data from the *HFA II - i* to a third party program such as Peridata© is possible only in the Serial II transfer mode.

Transmitting *HFA II - i* Tests to Third Party Programs

Ensure that the Serial II Transfer Disk is loaded by checking the destination window of the Transfer Files selection on the Files Menu. If not, load the Serial II Transfer Disk as described in Appendix section C.2.

1) From the HFA II - i Main Menu, select `System Setup`.

2) Select the `Save/Transmit` option.

3) Select `RS-232 Options`.

4) On the RS-232 Options screen, select the following settings:
   A) Set Baud Rate to 9600
   B) Parity to Even
   C) Data Bits to 7
   D) Stop Bits to 1

5) Press `Proceed`. The Transmit/Save screen will then appear.

6) Press the `Main Menu icon` in the upper right corner of the screen.

7) From the Main Menu, select `File Functions`.

8) Select `Transfer Tests`. A dialog box titled "Disk Options" will appear on screen.

9) Select `Hard Drive` as the Source.

10) Select `HFA I Serial Cable` as the Destination.

11) Select the `Directory Order` (either `Name` or `Date`), then press `Proceed`.

- If you chose `Name`:

To select all files on the drive, press `Enter`, and `Select All`. All files on the disk will be marked with a "✓" to indicate that they have been selected.

- If you search files by patient name:

Enter the name - or just the first few characters - of the patient's last name whose test(s) you wish to transfer. Select the test(s) you wish to transfer. All files selected will be marked with a "✓" to indicate that they have been selected.

- If you chose Date:

  The file directory will be displayed in reverse chronological order. Enter a specific date (mm-dd-yyyy), then choose `Enter`. The file directory will display tests taken on the date you selected. Select the test(s) you wish to transfer. All files selected will be marked with a "✓" to indicate that they have been selected.

12) Press `Proceed`.

    A pop up dialog box will appear advising you of the number of tests selected to be transferred.

13) If you wish to proceed, select `YES`.

    After all tests are transmitted, a pop up dialog box will appear advising you of the number of tests that were successfully transferred.

14) Press the `Main Menu` icon to exit this function.

Appendix D. Approved Parallel Laser Jet Printers

Currently, the only customer-supplied printers that have been approved for use on the *HFA II - i* are laser jet printers, equipped with a parallel port. The following list of printers has meets both the functional and current leakage testing requirements for the *HFA II - i*.

- HPLJ1100 SE
- HPLJ1200 SE
- HPLJ3200 SE
- Lexmark E312 L

(This page left blank intentionally)

Appendix E. Instrument/BIOS Configuration

E.1 Instrument Configuration

This section provides a listing of configuration settings that are critical to the operation of the *HFA II - i* unit.

Bootup Sequence

In the Advanced CMOS SETUP, the first boot device is IDE-0 (hard drive). The instrument will not boot up a system disk from either the Magnetic Optical drive or the floppy drive (if configured with the default settings). Special instructions have been programmed in the instrument to recognize the installation disks and the Diagnostic Support Tool disks. If an application diskette or the DST diskette are in the floppy drive during instrument power up, the system will recognize them and allow the system to boot from the floppy disk. If you attempt to load any other diagnostic software utilities that have a system on the disk, you will need to first set the first boot device to floppy.

Note: *If you set the first boot device in the Advanced CMOS Setup to Floppy for diagnostic purposes, it is necessary to reset the boot sequence to IDE-0 after using the utility. Failure to do so will create a "Non-system disk or disk error Replace and strike any key" any time a floppy disk is left in the floppy drive during the bootup sequence.*

Changing the BIOS Advanced CMOS Setup First Boot Device

1) Set the *HFA II - i* system power switch to **ON**.

2) Press and hold the *Delete* key.

3) A **Enter current Password** dialogue will appear.

4) Enter the password.

5) The **AMIBIOS HIFLEX SETUP UTILITY** screen will appear.

6) Use the down arrow key to select **Advanced CMOS Setup**.

7) Press *Enter*.

8) The **AMIOBIOS Setup - Advanced CMOS Setup** screen is displayed.

9) Use the down arrow to select **1st Boot Device**.

10) Use the *PgUp* (page up) or *Pg Dn* (page down) keys to select the first boot device. Set the first boot device to floppy if you plan on using the diagnostic utilities. Set the first boot device to IDE-0 if you plan on resetting the instrument for normal operation.

11) Press *ESC* (escape) to exit the **Advanced CMOS Setup** screen.

12) Press the *F-10* function key to save and exit the **AMIBIOS HIFLEX SETUP UTILITY**.

13) Press *Enter* to answer yes to the **Save current settings and exit** prompt.

E.2 BIOS Configuration

Standard CMOS Setup

Floppy Drive A	1.44 MB 3 1/2
Floppy Drive B	Not installed
Pri Master	Auto
Pri Slave	Auto
Sec Master	Not Installed
Sec Slave	Not Installed
Boot Sector Virus Protection	Disabled

Advanced CMOS SETUP

Quick Boot	Enabled
1st Boot Devise	IDE-0
2nd Boot Devise	Floppy
3rd Boot Devise	IDE-1
4th Boot Devise	Disabled
Try other Boot Devices	Yes
Initial Display Mode	Silent
Display Mode at Add-On-ROM Init	Keep Current
S.M.A.R.T. for Hard Disks	Enabled
BootUp Num-lock	Off
Floppy Drive Swap	Enabled
PS/2 Mouse Support	Enabled
System Keyboard	Absent
Primary Display	VGA/EGA
Password Check	Setup
Boot to OS/2 > 64MB	No
CPU Serial Number	Disabled
L1 Cache	Writeback
L2 Cache	Writeback
System BIOS Cacheable	Enabled
C000,64K Shadow	Cached
D000,64K Shadow	Disabled

Advanced ChipSet Setup

USB Function	Enabled
USB Keyboard Legacy Support	Enabled
DRAM Page Closing Policy	Closed
DRAM Tras/Trc Cycle time	5/7
Address Setup Time (SCLKs)	1
CAS# latency (SCLKs)	3
SDRAM RAS# to CAS# delay	2
SDRAM RAS# Precharge	2

Graphics Mode Select	UMA - 1MB
Display Cache Window Size	64MB
ICH Delayed Transaction	Enabled
C1kGen Spread Spectrum	Disabled
Local Memory Frequency	100 MHz

**** Display Cache Function ****

Initialize Display Cache Memory	Enabled
Paging Mode Control	Open
RAS-to-CAS	Default
CAS Latency	Slow
RAS Timing	Slow
RAS Precharge Timing	Slow
Watch Dog Timer Control	Disabled
Watch Dog Timer Setting	8 sec.
CMOS RAM CLEAR FUNCTION	Enabled

Power Management Set-up

ACPI Aware O/S	No
ACPI Standby State	S1/POS
Power Management /APM	Disabled
Video Power Down Mode	Disabled
Hard Disk Power Down Mode	Disabled
Standby Time Out (Minute)	Disabled
Suspend Time Out (Minute)	Disabled
Throttle Slow Clock Ratio	50.0%
Keyboard & PS/2 Mouse Access	Monitor
FDC/LPT/COM Ports Access	Monitor
Primary Master IDE Access	Monitor
Primary Slave IDE Access	Ignore
Secondary Master IDE Access	Ignore
Secondary Slave IDE Access	Ignore
PIRQ [A] IRQ Active	Ignore
PIRQ [B] IRQ Active	Ignore
PIRQ [C] IRQ Active	Ignore
PIRQ [D] IRQ Active	Ignore
Power Button Function	On/Off
Resume On Ring	Disabled
PME Function Support	Disabled
Resume On RTC Alarm	Disabled
RTC Alarm Date	15
RTC Alarm Hour	12
RTC Alarm Minute	30
RTC Alarm Second	30

Plug and Play Setup

Plug and Play Aware O/S	No
Clear NVRAM	No
PCI Latency Timer (PCI Clocks)	64
Primary Graphics Adapter	Add-on VGA
PCI VGA Palette Snoop	Disabled
PCI IDE BusMaster	Disabled
PCI Slot1 IRQ Priority	Auto
PCI Slot2 IRQ Priority	Auto
PCI Slot3 IRQ Priority	Auto
PCI Slot4 IRQ Priority	Auto
DMA Channel 0	PnP
DMA Channel 1	PnP
DMA Channel 3	PnP
DMA Channel 5	PnP
DMA Channel 6	PnP
DMA Channel 7	PnP
IRQ 3	PCI/PnP
IRQ 4	PCI/PnP
IRQ 5	ISA/ESIA
IRQ 7	PCI/PnP
IRQ 9	PCI/PnP
IRQ 10	PCI/PnP
IRQ 11	ISA/ESIA
IRQ 12	ISA/ESIA
IRQ 14	PCI/PnP
IRQ 15	PCI/PnP

Peripheral Setup

OnBoard IDE	Primary
OnBoard FDC	Enabled
OnBoard Serial Port A	3F8/COM1
OnBoard Serial Port B	2F8/COM2
OnBoard Parallel Port	3BC
Parallel Port Mode	Normal
EPP Version	N/A
Parallel Port IRQ	7
Parallel Port DMA Channel	N/A
Mouse PowerOn Function	Disabled
Keybord PowerOn Function	Disabled
Specific Key for PowerOn	N/A

(This page left intentionally blank)

Appendix F. Operating System

The operating system is a real-time system based on the Vx Works kernel. In addition to Vx Works, the file system DOS Fs and Vx Works run-time libraries are utilized.

The operating system is structured to be run as a preemptive, real-time, multitasking environment, using message passing as the principal method of interprocess communication. The system assumes the existence of both a hard disk as well as a floppy disk system. The floppy disk file system is designed to be compatible with that used by IBM PC-DOS compatible machines. The Vx Works operating system supports an IDE hard drive and a Magneto Optical drive through the file system.

(This page left intentionally blank)

Appendix G.
- **Initializing the Cal/Config Data**
- **Setting Serial Number**
- **Setting the Model/Hardware Options**
- **Setting the Software Options**

The four operations described in Appendix G can be performed by using the Diagnostic Support Tool (DST).

NOTE: *Refer to Figure G-1 for a graphical representation of the descriptions given below.*

- **Initializing the Cal/Config Data—** is required whenever a new Hard Drive is installed, or the existing Hard Drive is initialized or becomes corrupted.

  Initializing the Cal/Config Data erases the stored systems information in the **CALCFG.INI** and **NVRAM.DAT** files that are located on the hard drive. Calibration constants, model and serial number, instrument defaults, hardware options and software options are all erased during the Cal/Config Data initialization process. All of these parameters must be reentered after Cal/Config Data initialization.

- **Setting Serial Number** — is required any time the Hard Drive is replaced, or the Cal/Config Data has been initialized or corrupted.

  Setting the Serial Number writes and stores the instrument model number and serial number in both the **CALCFG.INI** and **NVRAM.DAT** files on the Hard Drive.

- **Setting the Model/Hardware Options** — is required whenever a new hard drive is installed or the existing Cal/Config Data has been initialized or corrupted.

  Setting the Hardware Options writes and stores the hardware options HEX number in the **CALCFG.INI** file. The hard option HEX number, also called the "hard opt", is used by the instrument operating system to determine which features of the instrument are to be enabled (accessible to the user). The hard opt number can be viewed on the *HFA II - i* unit information screen.

- **Setting the Software Options** — is required whenever the model/hardware option number has been changed or entered into the Cal/Config Data (for the first time).

  Each time software is loaded onto the hard disk, a software option number is automatically written into the Cal/Config Data. The software option number generated is based on the model or hardware option number. If the software option number is missing or does not agree with the hardware option number, instrument features (for a particular model *HFA II - i*) will not be enabled (accessible to the user). The software option number can be viewed on the *HFA II - i* information screen.

Equipment Required:

- Service Key (see Appendix A)
- Diagnostic Support Tool (DST) software diskettes (see Appendix A.2)

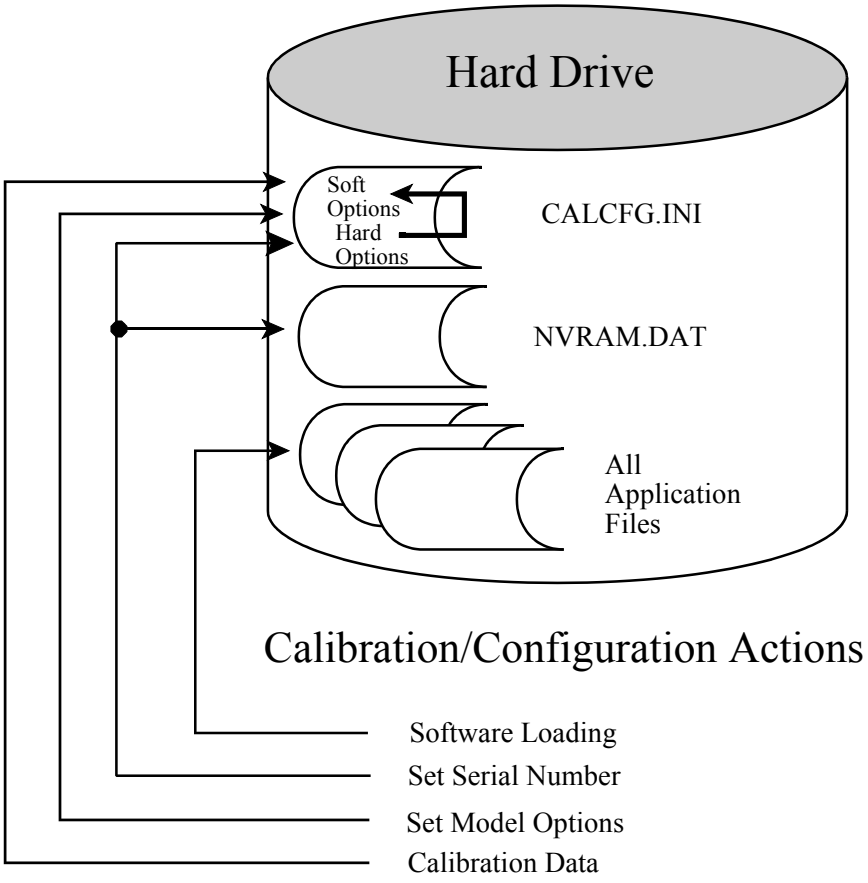

FIGURE G-1. Actions Performed In Appendix G

G.1 Initializing the Cal/Config Data

This procedure is required whenever a new hard drive has been installed, before calibration is performed.

1) Set up the DST for use as described in Appendix A.2, under Diagnostic Support Tool.

2) From the DST Main Menu, select `Configuration`. The Configuration Menu appears.

3) Select `Initialize the Configuration`. A warning message appears informing you that all configuration and calibration data will be destroyed.

4) Select `OK`. A test log screen appears confirming whether or not you want to continue. Select `Initialize` to erase all contents of the Cal/Config Data. (Select `Quit` to return to the Configuration Menu.)

5) "Initialization successful" message will appear.

   NOTE: *If you initialize the CAL/Config Data, you must also perform the procedures for* ***Setting Serial Number****,* ***Setting the Model/Hardware Options****, and* ***Setting the Software Options*** *described below. Then recalibrate the instrument (see Table 3-1).*

G.2 Setting Serial Number

This procedure is required any time the hard drive is replaced or the Cal/Config Data is initialized. During this procedure you will be instructed to type in the serial number of the instrument. The serial number can always be found on the label located on the rear cover assembly.

NOTE: *The instrument's serial number NEVER changes throughout the life of the instrument. Instrument serial numbers are critical for tracking instrument reliability, performance, and customer satisfaction.*

1) Set up the DST for use as described in Appendix A.2, under Diagnostic Support Tool.

2) From the DST Main Menu select `Configuration`. The Configuration Menu appears.

3) Select `Set Serial Number`, then select `Edit`. A ten-key pad appears. Type in the four-digit model of the instrument. For example, 0750, then select [Enter].

4) A ten-key pad appears. Type in the six-digit serial number of the instrument. For example, 001000, then select [Enter].

5) Select `Save` to store the serial number and return to the Configuration Menu. (Selecting Quit will not store the serial number and will return to the Configuration Menu.)
6) Switch OFF the instrument and remove the Service Key.

7) Switch ON the instrument and verify that the correct serial number appears on the screen during the boot-up process.

G.3 Setting the Model/Hardware Options

NOTE: *The hardware options codes listed in this section are for C1.1 system software. Changes in future revisions of software may result in changes to the hardware options.*

This procedure is designed to set up the basic hardware configuration by setting the model number of the instrument. This is required whenever the CAL/Config Data has just been initialized.

For Model 720i

1) Set up the DST for use as described in Appendix A.2, under Diagnostic Support Tool.

2) From the DST Main Menu select `Set Model/Hardware Options`. The Model/Hardware Options Menu appears.

3) Select `Set Model 720i Defaults`, a test log menu appears and displays the model 720*i* default settings.

4) Select `Continue`. The Model *720i* hardware Options are set and the Model/Hardware Options Menu is displayed.

5) Switch OFF the instrument and remove the Service Key.

6) Switch ON the instrument. Select the "i" screen and verify that the correct model number appears on the boot-up screen.

7) Proceed to "Setting the Software Options."

For Model 740*i*

1) Set up the DST for use as described in Appendix A.2, under Diagnostic Support Tool.

2) From the DST Main Menu select `Set Model/Hardware Options`. The Model/Hardware Options Menu appears.

3) Select `Set Model 740i Defaults`, a test log menu appears and displays the model 740*i* default settings.

4) Select `Continue`. The Model 740*i* hardware Options are set and the Model/Hardware Options Menu is displayed.

5) Switch OFF the instrument and remove the Service Key.

6) Switch ON the instrument. Select the "i" screen and verify that the correct model number appears on the boot-up screen.

7) Proceed to "Setting the Software Options."

For Model 750*i*

1) Set up the DST for use as described in Appendix A.2, under Diagnostic Support Tool.

2) From the DST Main Menu select `Set Model/Hardware Options`. The Model/Hardware Options Menu appears.

3) Select `Set Model 750i Defaults`, a test log menu appears and displays the model 750*i* default settings.

4) Select `Continue`. The Model 750*i* hardware Options are set and the Model/Hardware Options Menu is displayed.

5) Switch OFF the instrument and remove the Service Key.

6) Switch ON the instrument. Select the "i" screen and verify that the correct model number appears on the boot-up screen.

7) Proceed to "Setting the Software Options."

G.4 Setting the Software Options

NOTE: *Setting the software options is required whenever the hardware option number has been changed or the Cal/Config Data has just been initialized. Please note that the DST cannot be used to set the software option number unless the instrument is being repaired at the Carl Zeiss Meditec factory. All other repair situations must follow the procedure described below.*

The software option number is automatically created during the installation of application software. The software option number is based on the hardware option number already written into the Cal/Config Data. Ensure that the correct hardware option number has been written to the Cal/Config Data prior to creating the software option number.

1) Ensure that you have the latest revision of application software.

2) Follow the procedures in Appendix M for loading the application software.

3) At the *HFA II - i* Main Menu, select the ***"i"*** button at the top of the screen. When the *HFA II - i* Unit Configuration screen is displayed, verify that the correct Model Number, Hardware Option Number and Software Option Number have been set, based on instrument model (see Table G-1).

   NOTE: *The Hardware and Software Option Numbers are based on revision C3 software residing on the hard disk.*

Table G-1.

Model Number	Hardware Option Number	Software Option Number
720*i*	000134	0011590C
740*i*	230134	00157918
745*i*	330134	0015f918
750*i*	b30334	0017F9F8

Appendix H. Calibration Printouts

Contents:

- Cal / Wedge Printout
- Automated Light Intensity Verification Printouts
  - White Light Verification Data
  - Blue-Yellow Verification Data

H.1 Cal / Wedge Printout

The numbered definitions below (1, 2, 3, etc.) are keyed to the numbered elements of the sample calibration printout shown in Figure H-1.

1 = Date/time of calibration printout, instrument serial number, and hardware option number.

2 = NVM Data

The numbers that appear in the printout represent the current calibration values stored in Cal/Config Data for each item listed, for this particular instrument. A brief definition of each item is given below, followed by a table that lists the acceptable tolerance range for each item.

Proj	represents voltage* (left column) and intensity* (right column) of the projection lamp when a white stimulus is projected.
Bowl	represents voltage* and intensity* for the white bowl lamps.
Blue	represents voltage* and intensity* of the projection lamp when a blue stimulus is projected.
Yellow	represents voltage* and intensity* for the yellow bowl lamp
Right Mode .	microsteps of positioning
Left Mode . .	microsteps of positioning
Offset Fix . . .	microsteps of positioning
Focus	microsteps of positioning
Shutter	microsteps of positioning
Aperture . . .	microsteps of positioning for each of the 5 positions of the aperture wheel
Color	microsteps of positioning for each of the 5 positions of the color wheel

** Voltage and intensity are expressed here as relative numbers, not actual units of voltage or intensity (such as volts or foot-lamberts). Typically, any high round number (e.g., 30000) that appears here in the printout is the default value for a parameter that has not been calibrated. It is possible but highly unlikely that a calibrated value would fall precisely at a high round number.*

3 = Voltage drop across projector lamp when white stimulus is projected, and when blue stimulus is projected.

NOTE: *The Blue projector voltage drop will display a value greater than zero* **only** *when the printout is obtained immediately* **after** *performing the light intensity calibration/verification.*

4 = Camera/Gaze Data

Illumination:

Reflex LED . . . . . intensity of the reflex LED
Left LED . . . . . intensity of the left trial lens LED
Right LED . . . . . intensity of the right trial lens LED
Gain No Trial Lens . . . . . camera gain with trial lens holder down
Gain Trial Lens . . . . . camera gain with trial lens holder up
Scale . . . . . (not currently used)

Video Window:

Source X . . . . . where the video image will be positioned on the CRT (inside the video insert)
Source Y . . . . . where the video image will be positioned on the CRT (inside the video insert)
Dest X . . . . . where the video insert will be positioned on the CRT screen
Dest Y . . . . . where the video insert will be positioned on the CRT screen
Width . . . . . represents the width of the video insert
Height . . . . . represents the height of the video insert

Gaze Window:

X . . . . . represents the distance from the left edge of the video insert to the left edge of the gaze box
Y . . . . . represents the distance from the top edge of the video insert to the top edge of the gaze box
Width . . . . . represents the width of the gaze box
Height . . . . . represents the height of the gaze box

Gaze Size:

Height . . . . . conversion factor for converting pixels to millimeters
Width . . . . . conversion factor for converting pixels to millimeters
Aspect Ratio . . . . . normalizing factor to produce a true circle from the data received from the camera

5 = Blue Correction Table.

The Blue Correction Table contains twelve correction values for both the *Film wedge* and the *Glass wedge*. The Blue Correction table for the *Film wedge* should start at zero and typically increase to around the mid to high 20's, and sometimes into the 30's The Blue Correction table for the *Glass wedge* should also start at zero, and display negative numbers going to –20 or –30 (in the middle of the table).

The values given above are to be used as a general guideline. The final evaluation for Blue Calibration depends on the light intensity worksheet results.

6 = Wedge Attenuation

To help quantify the attenuation of the film and glass wedges, additional data has been added to the calibration printout. *This information is intended for manufacturing and engineering use and is not required for field service evaluation*. The ***Working Film Wedge Steps*** displayed on the calibration printout indicates the total attenuation of the film wedge. The ***Working Glass Wedge Steps*** indicates the total attenuation of the glass wedge. Both are expressed in centibels (10 centibels equals 1 decibel). The ***Total Working Wedge Attenuation*** displayed on the calibration printout is the combined attenuation of the ***Working Film Wedge Steps*** and ***Working Glass Wedge Steps***, also expressed in centibels. The ***Total Working Wedge Attenuation*** must be greater than 500 centibels. ***Bins Film*** and ***Bins Glass*** displayed on the calibration printout are used to evaluate the linearity of the NVM ND Table 0 film wedge and NVM ND Table 1 glass wedge. Ideally, the amount of attenuation between any two adjacent glass or film wedge motor steps should increase between 1, 2, or 3 centibels. However this may not always be the case and is not a requirement for service evaluation.

7 = NVM ND Table 0

This is the *film* wedge calibration table stored in Cal/Config Data. The values in the table were obtained during the latest wedge calibration. During wedge calibration, brightness of the projected spot is sensed for 175 different positions of the wedge.

With a properly calibrated film wedge, the values printed should run from approximately 0 – 370 in a linear progression, with no large jumps in value between adjacent positions. If a large jump in value is noted, check the wedge for fingerprints, scratches, debris, or flaking emulsion.

8 = NVM ND Table 1

This is the *glass* wedge calibration table stored in Cal/Config Data. The values in the table are obtained during the wedge calibration process. During wedge calibration, brightness of the projected spot is sensed for 175 different positions of the wedge.

With a properly calibrated glass wedge, the values printed should run from approximately 0 - 270 in a linear progression, with no large jumps in value between adjacent positions. If a large jump in value is noted, check the wedge for fingerprints, scratches, debris, or flaking emulsion.

(This page left intentionally blank)

1

```
2001-06-29     10:54
MACHINE ID: 0750-7501723 . 00000000-00B30134
NVM DATA
  PROJ              93   38372
  BOWL              35    3079
  BLUE              88   11938
  YELLOW            94   29677
```

2

```
  RIGHT MODE        32     128
  LEFT MODE         48     224
  OFFSET FIX        16       0
  FOCUS            560
  SHUTTER          168
  APERTURE        -192    -224    -224    -208    -208
  COLOR           -160    -160    -160    -160    -160
```

3

```
WHITE PROJECTOR VOLTAGE DROP: 8.715572
BLUE  PROJECTOR VOLTAGE DROP: 9.282444
```

4

```
CAMERA/GAZE DATA
  ILLUMINATION:
      REFLEX LED            45
      LEFT LED              29
      RIGHT LED             39
      GAIN NO TRIAL LENS    0
      GAIN TRIAL LENS       0
      SCALE                 0
  VIDEO WINDOW:
      SOURCE X        174
      SOURCE Y        199
      DEST   X        0
      DEST   Y        0
      WIDTH           143
      HEIGHT          120
  GAZE WINDOW:
      X               126
      Y               125
      WIDTH           100
      HEIGHT          99
  GAZE SIZE:
      HEIGHT          15
      WIDTH           23
      ASPECT RATIO    0.660
```

5

```
BLUE CORRECTION TABLE:
  FILM      0    2    1    0    0    0    0    1   -1    6    2    2
  GLASS     0    1   -5  -12  -15  -18  -18  -16  -15  -16  -15  -15
```

6

```
TOTAL WORKING WEDGE ATTENUATION : 565
WORKING FILM  WEDGE STEP SLOPE (1 - 326 MB):  170
WORKING GLASS WEDGE STEP SLOPE (1 - 239 MB):  139

 BINS:  <-4   -4   -3   -2   -1    0    1    2    3    4   >4
 FILM:   13    0    2    1    0   49   21    9   35   14   26

 BINS:  <-4   -4   -3   -2   -1    0    1    2    3    4   >4
GLASS:    0    0    0    0    5   11   43   61    9    4    6
```

7

```
  NVM ND TABLE 0 -- FILM
     0     0     0     0     0     2     6    12    16    19
    20    20    20    20    20    20    20    20    20    21
    21    21    21    21    21    21    21    21    21    21
    21    21    21    21    21    21    21    21    21    21
    21    21    21    21    21    21    22    22    22    22
    22    22    22    22    22    22    23    23    23    24
    24    24    25    26    27    28    29    30    31    32
    33    34    35    36    37    39    41    43    45    48
    51    54    57    60    63    66    69    72    75    78
    81    85    89    92    96    99   102   105   108   111
   115   118   121   123   126   129   132   135   138   142
   145   148   152   156   158   161   165   169   172   174
   179   183   186   189   195   200   203   206   212   216
   219   220   227   233   235   235   243   249   250   248
   258   263   264   261   274   278   278   272   287   293
   290   281   299   304   295   285   305   313   306   292
   310   318   309   294   316   322   313   298   318   324
   313   298   318   326   313
```

8

```
  NVM ND TABLE 1 -- GLASS
     0     0     0     0     0     0     0     0     0     0
     0     0     0     0     0     0     0     0     0     0
     0     0     0     0     0     0     0     0     0     0
     0     0     0     0     0     0     1     1     2     3
     5     7     9    12    14    17    19    21    24    26
    28    30    32    33    35    37    38    40    42    43
    45    46    48    50    51    53    55    57    59    61
    63    64    67    69    71    73    75    78    80    82
    84    86    88    90    92    94    96    97    99   100
   102   104   106   108   109   110   112   113   115   116
   117   119   121   122   123   125   127   128   129   131
   133   134   135   137   139   140   141   144   145   146
   148   150   152   153   154   157   159   160   161   164
   165   167   168   171   173   174   175   179   181   182
   182   186   188   188   189   193   194   195   196   200
   201   202   202   207   209   209   209   214   216   216
   215   221   222   222   221   228   228   228   227   234
   234   233   232   238   239
```

FIGURE H - 1. Sample Cal/Wedge Printout

TABLE H - 1. CALIBRATION TOLERANCE RANGES

	Min	Max	Min	Max
NVM DATA	Voltage		Intensity	
Proj	40	127	30000	65534
Bowl	10	127	1000	10000
Blue	40	127	60000	65534
Yellow	10	127	10000	65534
	Microsteps (X)		Microsteps (Y)	
Right Mode	–1000	1000	–1000	1000
Left Mode	–1000	1000	–1000	1000
Offset Fix	–1000	1000	–1000	1000
	Microsteps			
Focus	–1000	1000		
Shutter	120	220		
Aperture	–1000	1000		
Color	–1000	1000		
CAMERA/GAZE DATA	Relative Numbers			
Illumination:				
Reflex LED	1	127		
Left LED	1	127		
Right LED	1	127		
Gain No Trial Lens	0	127		
Gain Trial Lens	0	127		
Scale	(not used)			

(continued)

(Table H - 1. — continued)

	Min	Max	Min	Max
Video Window:				
Source X	1	120		
Source Y	1	600		
Dest X	0	120		
Dest Y	0	500		
Width	64	256		
Height	64	256		
Gaze Window:				
X	8	255		
Y	8	255		
Width	8	127		
Height	8	127		
Gaze Size:				
Height	1	64		
Width	1	64		
Aspect Ratio	0.10	2.00		

H.2 Automated Light Intensity Printouts

Automated Light Intensity Printouts provide a numerical and graphical representation of the instrument's current light intensity calibration. The printouts can only be obtained by selecting the Verification button on the Calibration Main Menu.

To obtain the Automated Light Intensity Printout, perform the following:

1) Complete the light intensity Before or After verification as described in Section 4.

   NOTE: *The Mfg and QA selections are for manufacturing use only. Selecting either of these two buttons will set tolerance values which are much tighter than those required for field service evaluation.*

2) Select `Print`. A single-page printout will be obtained on all non-blue-yellow models. On blue-yellow models, a two-page printout will be obtained. The first page represents the White Light Verification Data and the second page represents the Blue-Yellow Verification Data.

Interpreting the Printouts

HFA II - i White Light Verification Data Printout

(Refer to sample printout on following page)

(1) Indicates whether the verification data was obtained either BEFORE or AFTER servicing the *HFA II - i*.
(2) Serial number of the *HFA II - i*.
(3) Serial number of the Soligor lightmeter being used to perform the verification.
(4) Revision level of the software currently installed in the instrument.
(5) The multiplier values (P1, P2, P3, P3F) written on the calibration label and affixed to the Soligor lightmeter being used to perform the verification.
(6) The current white projector voltage required to obtain a 0 dB light intensity value.
(7) The dB spread or amount of dB difference between the highest and lowest light intensity data points appearing on the graph (including the BOWL). For the White Light Verification Data Printout, this value must be 1.0 dB or less.
(8) A numerical and graphical representation of each measured spot value (0 dB - 34 dB) and the BOWL value. The tolerances (MIN and MAX), as well as the actual measured value (READING), for each data point are indicated in Ft-L.
(9) The asterisk indicates a value that is out of tolerance. (***Note:*** *The data point at 39 dB is not used during field service evaluation.*)
(10) Light intensity data points. Nine data points (including the BOWL) are plotted to indicate the attenuation produced by the glass and film wedges.
(11) Spot Ratio - for manufacturing use only.
(12) Location to be signed by the service technician performing the verification.

HFA II - i White Light Verification Data

HFA II WHITE LIGHT VERIFICATION DATA : BEFORE

HFA II SERIAL NUMBER: 750 7501723
SOLIDAR METER NUMBER: 1193
SYSTEM SOFTWARE REV: REV C1.1
DATE & TIME: 06-29-2001 10:40 AM

P1: 471.07 P2: 42.537 P3: 10.308 FSF: 0.985

WHITE PROJECTOR VOLTAGE AT : 8.694 V (10 V MAX)

DS SPREAD: 1.2 DB *

	0DB	4DB	9DB	14DB	19DB	24DB	29DB	34DB	BGL
MAX	1067.0	465.0	147.00	46.60	14.70	4.560	1.470	0.466	3.31
READING	942.1	375.9	113.06	38.26	11.49	4.000	1.237	0.474	2.92
MIN	809.0	254.0	92.90	29.40	9.23	2.540	0.330	0.294	2.43

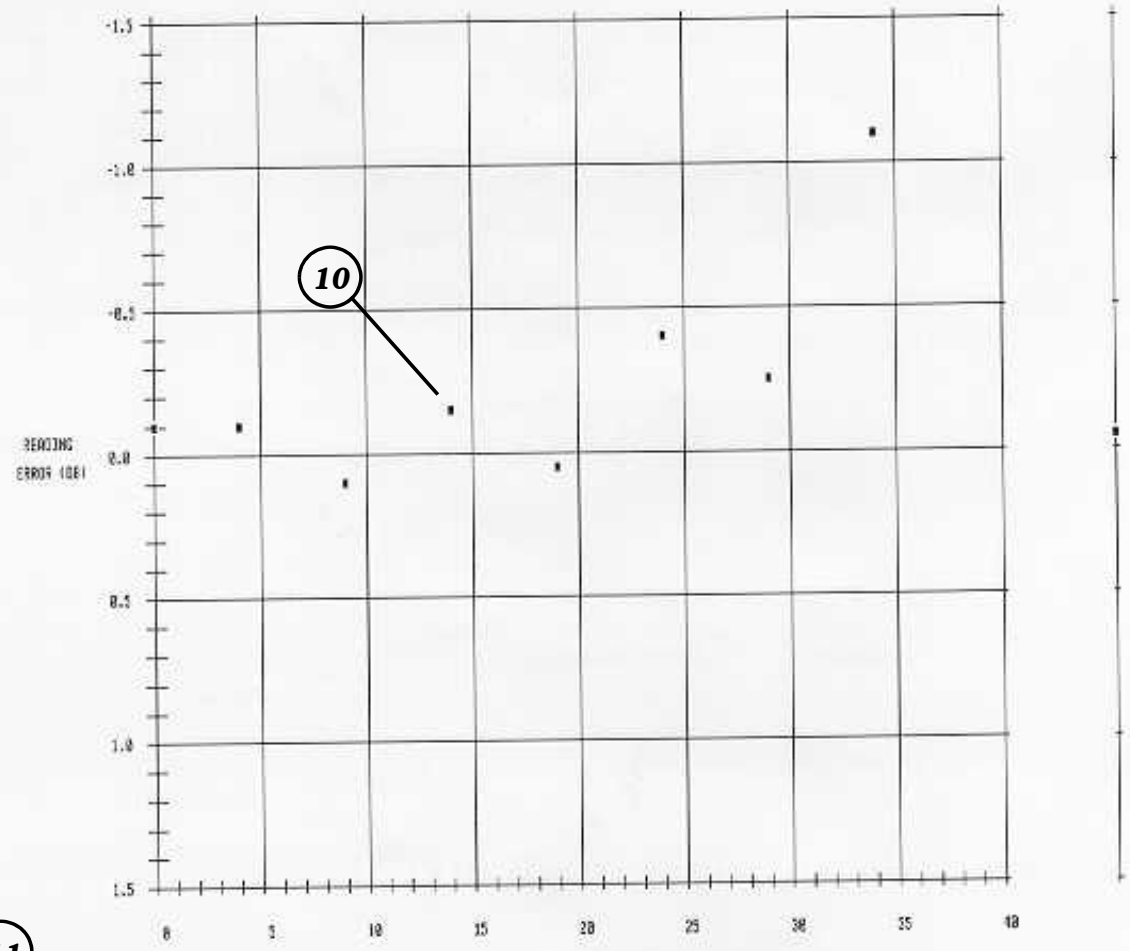

SPOT RATIO
III/I: 15.6 (12.0 - 20.0)
III/II: 4.0 (3.2 - 5.0)

DONE BY _____

1 2 3 4 5 6 7 8 9 10 11 12

HFA II - i Blue-Yellow Verification Data Printout

(Refer to sample printout on following page)

(13) Indicates whether the verification data was obtained either BEFORE or AFTER servicing the *HFA II - i*.

(14) Serial number of the *HFA II - i*.

(15) Serial number of the Soligor lightmeter being used to perform the verification.

(16) Revision level of the system software currently installed in the instrument.

(17) The multiplier values (P3B and P3Y) written on the calibration label and affixed to the Soligor lightmeter being used to perform the verification. (***Note:*** *BYP3 and P3 are the older multiplier values used to calibrate Blue-Yellow intensities. The newer values are P3B and P3Y.*)

(18) The current blue projector voltage required to obtain a 0 dB light intensity value displayed in Ft-L.

(19) The dB spread or amount of dB difference between the highest and lowest light intensity data points appearing on the graph (including the BOWL). For the Blue Light Verification Data Printout, this value must be 1.5 dB or less.

(20) A numerical and graphical representation of each measured spot value (0 dB - 23 dB) and the BOWL value. The tolerances (MIN and MAX) as well as the actual measured value (READING) for each data point are indicated in Ft-L.

(21) The asterisk indicates a value which is out of tolerance. (***Note:*** *The data points at 18 dB and 23 dB are not used during field service evaluation.*)

(22) Light intensity data points. Five data points (including the BOWL) are plotted indicating the attenuation produced by the glass and film wedges.

(23) Location to be signed by the service engineer performing the verification.

HFA II - i Blue-Yellow Light Verification Data

HFA II BLUE YELLOW LIGHT VERIFICATION DATA : BEFORE

HFA II SERIAL NUMBER: 750 7501723
SOLIDAR METER NUMBER: 1188
SYSTEM SOFTWARE REV: REV C1.1
DATE & TIME: 06-23-2001 12:52 AM

P3B: 12.016 P3Y: 8.803

BLUE PROJECTOR VOLTAGE AT : 9.380 V (10 V MAX)

DB SPREAD: 1.2 DB

	800	300	800	1300	800L
MAX	8.483	3.452	1.220	0.379	34.30
READING	6.363	2.884	0.861	0.300	29.41
MIN	4.252	2.620	0.760	0.239	26.02

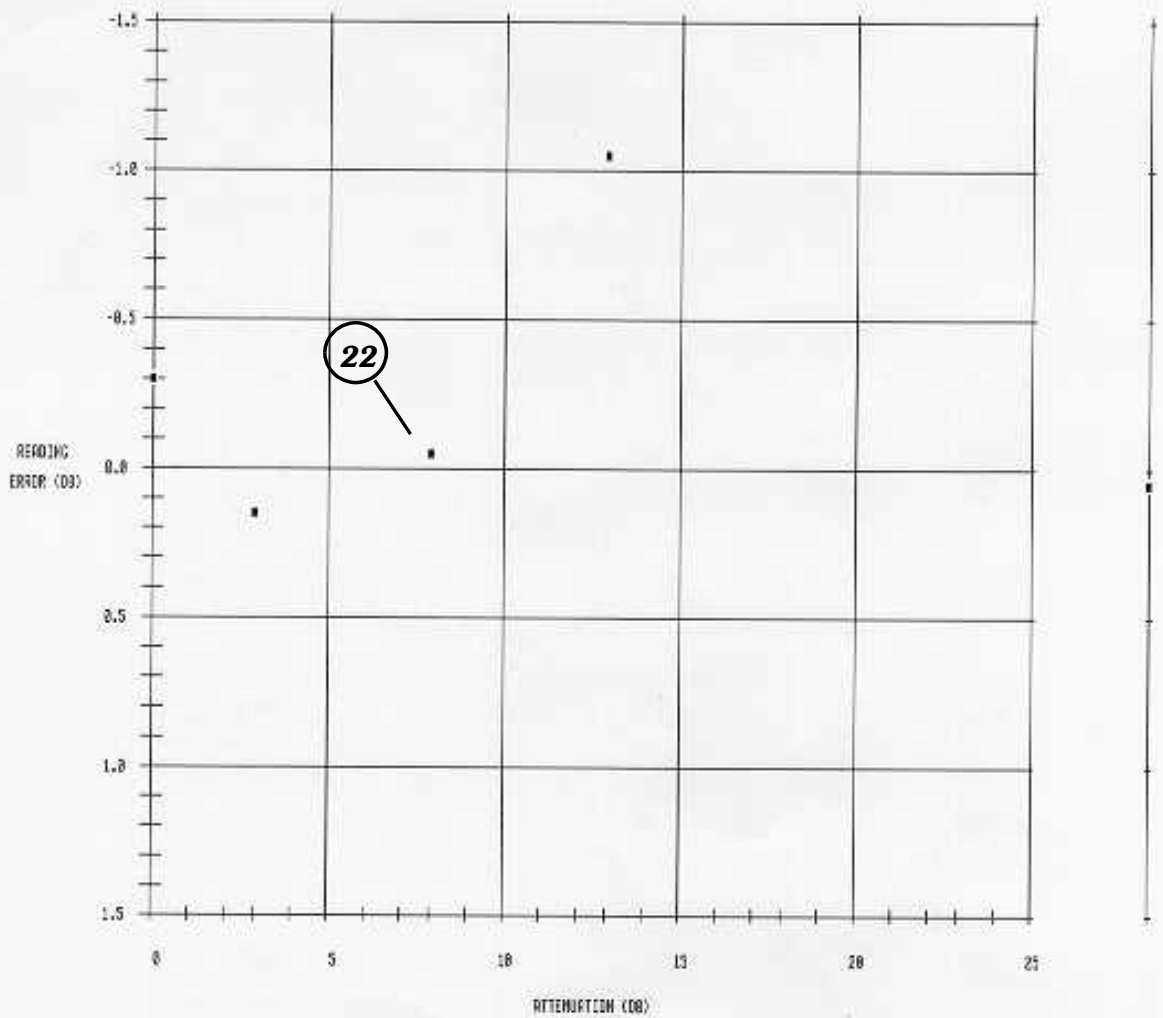

DONE BY _____

(This page left intentionally blank)

Appendix I. Service Forms

The forms in this section should be used as masters for making additional copies.

- Calibration Shift Worksheet (previously known as Worksheet 3)
- Calibration Notice ("Doctor Card")
- System Checkout Checklist

(This page left intentionally blank)

Calibration Shift Worksheet - After Service

This worksheet (called the Calibration Shift Worksheet) enables the service engineer to determine if there has been a shift or change in instrument light intensity calibration. The worksheet compares the ***Before*** light intensity data to the ***After*** light intensity data. The worksheet should be used anytime recalibration of the white light intensity has been performed.

NOTE: *There may be instances when the Before light intensity data cannot be obtained. In these cases, the worksheet cannot be completed and therefore is not required.*

The lower portion of this Worksheet enables the service representative to determine the significance of the light intensity shift, and whether or not the doctor or office manager should receive a copy of the calibration notice. If the shift is determined to be significant, it is important that the doctor is aware of the shift for future patient diagnosis.

Worksheet

dB ratio = 10*Log($BKGD_{FtL}$ / $\#37_{FtL}$)

Note: *#37 is the same Ft-L value as the 29 dB data point on the White Light Verification Printout.*

1. Using above formula & values from the BEFORE White Light Verification Data Printout, find the OLD dB ratio: _____dB
2. Using above formula & values from the AFTER White Light Verification Data Printout, find the NEW dB ratio: _____dB
3. Find the dB shift: _____dB
   (OLD dB RATIO) – (NEW dB RATIO) = dB shift

Do you need to leave the calibration notice?

1. If dB shift is +/- 1dB, *DO NOT* leave the notice.
2. *DO NOT* include (+) or (–) signs on the notice.
3. If dB shift is (+), circle *low* on the notice.
4. If dB shift is (–), circle *high* on the notice.
5. If ±1dB or greater shift, leave the cal notice.
6. If ±4dB or greater shift, call your regional manager.

(This page left intentionally blank)

Calibration Notice (Sample)

The Calibration Notice is a multipart form. For a supply of this form, please contact the Technical Support Coordinator at Carl Zeiss Meditec.

5160 Hacienda Drive, Dublin, CA 94568 ▪ (925) 557-4100 ▪ (1-800) 858-1508

ZEISS CARL ZEISS MEDITEC

Date _____

Dear Doctor:

We checked the calibration of your Field Analyzer, serial number _____ today and found that it was reading _____ dB too high / low (circle one). The instrument has now been recalibrated.

Please keep this calibration shift in mind when comparing future results against previous field. If it was reading too high, future tests of stable patients will tend to show an artifactual loss in threshold sensitivity in the amount shown above. If it was reading too low, future tests will tend to show an artifactual improvement.

We recommend yearly preventative maintenance and calibration checks for your Field Analyzer. Inquire about our service contracts which include a yearly preventative maintenance visit.

If you have any questions, please contact Carl Zeiss Meditec at 800-858-1508 and ask to have your area's Regional Service Manager give you a call.

Sincerely,

_____
Carl Zeiss Meditec Field Service Engineer

WHITE-Product Manager Copy CANARY-Service Copy PINK-Customer Copy

---

(This page left intentionally blank)

HFA II SYSTEM CHECKOUT CHECKLIST

Your Name: _____ *HFA II - i* S/N: _____

Date: _____

NOTE: *Following any calibration procedure that has calibration values stored in the Cal/Config Data, storage of the new values must be verified by cycling the power off-on* ***before you perform final system checkout****. If values obtained by the HFA II - i during calibration are not within an expected range, those values are held only in temporary storage and not written to the Cal/Config Data. When power is turned off, these values are erased and calibration reverts to its old status.*

The *HFA II - i* System Checkout Checklist Guidelines —

- **Part I** — The items described in Part I must be completed for ***All*** service calls.
- **Part II** — The items described in Part II must be completed when any of the following service conditions apply:

  -- Performing an instrument PM
  -- Recalibrating either the White/White or Blue/Yellow light intensities
  -- Replacing/initializing the Cal/Config Data
  -- Cleaning/replacing the brightness detector, ND wedges, or the color wheel
  -- Replacing the motor driver PCB

This checklist assumes that all required service has been performed on the *HFA II - i*. Place a checkmark next to each item if okay. If an item does not apply to the *HFA II - i* under service, indicate N/A (not applicable).

Part I -- For All Service Calls (Refer to the above System Checkout Checklist Guidelines.)

___ 1) If a repair has been performed, verify that all required adjustments/checks have been performed per Table 3-1.

___ 2) Acquire and print the results of your foveal test. Check that the foveal value obtained is within ±2 dB of your known foveal value. (4.8.1.1)

___ 3) Print the Cal/Wedge printout. Verify that all values are within specification. (Appendix H)

___ 4) Print the Unit Configuration printout. Verify that all entries are accurate, based on instrument serial number and model. (Appendix J).

___ 5) Print the System Log printout and then clear the log. Verify that all reported error conditions have been evaluated/corrected. (Appendix J)

Part II (Refer to the above System Checkout Checklist Guidelines.)

Calibration Checks —

___ 6) Verify that the white/white light intensities are within the specified tolerances. (Attach the required White Light Verification Data printout to this checklist.)

___ 7) Verify that the blue/yellow light intensities are within the specified tolerances. (Attach the required Blue Yellow Light Verification Data printout to this checklist.)

___ 8) Using the tool stand and fake eye, ensure that the camera is aligned and centered to the trial lens holder.

___ 9) Using the tool stand and fake eye, verify that the gaze tracking box is within tolerance.

___ 10) Using the tool stand and fake eye, ensure that all five IR LEDS are functional. Start a test and initialize gaze tracking. Observe that the three IR LEDs can be seen on the video image of the fake eye when the trial lens holder is in the down position (reflex and bowl IR LEDs) and in the up position (reflex and trial lens holder LEDs).

___ 11) Check that the touch screen response is within tolerance. Verify that patient data can be entered easily and without error.

___ 12) Verify that the CRT image is within specified tolerances.

___ 13) Enter Exerciser Tests. Run the 30/60 mixed tests for 5 minutes. No errors should be reported. While the test is running, verify that there is no shutter noise. Look into the bowl and ensure that there is no shutter streaking.

Operational Checks —

___ 14) Check the CPU battery voltage (in circuit). If the voltage is below 3.0 volts replace the battery and verify the CMOS settings are correct as per Appendix E.

___ 15) Verify that the power table moves up and down and that the table top or slider slides freely in and out. Ensure that the slider is securely fastened to the table top.

___ 16) Check that the external brightness knob moves freely and has additional brightness range.

___ 17) Check that the patient chinrest and headrest move smoothly and completely up/down and left/right. (Noise will be heard at the end of each motor limit.)

___ 18) Observe the bowl for dirt or other cosmetically unacceptable spots. Clean as needed.

___ 19) Check the operation of the rear fan, and clean the filter

___ 20) Check that the date is correct and the time is within 2 minutes.

___ 21) Select a patient test. Change parameters. Verify that the central fixation LED, inner diamond, and outer diamond all function.

___ 22) Turn foveal threshold on (except Model 720*i*). Select size III. Start the test. Verify that the size III spot is in the center of the inner fixation diamond. Ensure that the spots are sharply focused and no halo is visible. Test the patient button for operation.

___ 23) Recall a patient test from your test floppy disk. Display and print the test.

___ 24) Recall a test from the hard disk. Display and print the test.

___ 25) Duplicate a patient test from your test floppy disk to a formatted floppy. Display the copied test.

___ 26) Copy a patient test from your test floppy disk to the hard drive. Delete that test from the hard disk.

___ 27) Perform a backup using the Magneto-Optical drive to verify the backup/restore procedure.

___ 28) Turn power off/on and wait for the Main Menu. No errors should be reported.

(This page left intentionally blank)

Appendix J. System Screens and Logs

Contents:

The *HFA II - i* system software contains several screens and logs which can be used to determine system configuration, or may be used as troubleshooting aids. The descriptions given below assume that the system is fully operational. In certain instances, some or all of the screens or logs may not be obtainable due to instrument malfunction.

NOTE:

1. *Example screens and logs will vary based on the HFA II - i model and currently installed software, or the software being installed.*
2. *Further discussion of some of the items mentioned in this Appendix can be found elsewhere in this manual. In particular, software revision level information can always be found in the service bulletins.*

J.1 Boot Screen

Unlike the boot screen on the HFA II, unit configuration related information is not available on the boot screen of the *HFA II - i*. The information found on the HFA II boot screen will be found on the unit configuration screen commonly called the "***i***" screen of the *HFA II - i*. Also different from the HFA II is the fact that the *HFA II - i* does not report system errors with a set of audio beeping patterns. Refer to the Troubleshooting section in this manual for additional information.

J.2 Unit Configuration Screen

The *HFA II - i* Unit Configuration Screen provides system configuration data and system software information. This screen can always be accessed from the main menu of the instrument, and from some, but not all, other menus. Once accessed, it can also be printed. The screen provides such data as instrument serial number, software revision levels, and what hardware or software options have been enabled or disabled on the instrument.

To access the Unit Configuration Screen, perform the following:

C From the instrument's Main Menu, select the ***"i"*** button at the top left.

C After a short delay, a screen similar to the one shown below will be displayed on the CRT.

C If desired, the screen may be printed by selecting `Print`.

(1) Instrument model number.

(2) Instrument serial number.

(3) Revision level of the operating system currently installed on the hard disk.

(4) Revision level of the language software currently installed on the hard disk.

NOTE: *The language software revision level may be different from the operating or system software. This allows the language software to be updated independently of the system software.*

(5) Revision level of the Backplane.

(6) Revision level of the Motor Board.

(7) Available Memory on the system CPU PCB.

(8) Instrument hardware option number (refer to Appendix G).

(9) Instrument hardware options that have been enabled or disabled.

(10) Instrument software option number (refer to Appendix G).

(11) Instrument software options that have been enabled or disabled.

(12) Personalized identification for the doctor, instrument location, etc.

HFA II *i* - Series Configuration

MODEL	750I	1
SERIAL NUMBER	750-8234	2
OPERATING SYSTEM	REV C1.1	3
LANGUAGE	A6	4
BACKPLANE VERSION	A1	5
MOTOR BOARD VERSION	A1:A1:A1:A1:A1:A1	6
AVAILABLE MEMORY	63 MB	7
HARDWARE OPTIONS - 00000000 00B030134		8
MAGNETO-OPTICAL DRIVE	ENABLED	9
RED FILTER	ENABLED	
BLUE FILTER	ENABLED	
YELLOW BACKGROUND LIGHT	ENABLED	
GAZE HARDWARE INSTALLED	ENABLED	
SOFTWARE OPTIONS - 007F9F8		10
GAZE TRACK	ENABLED	11
AUTO PUPIL	ENABLED	
HEAD TRACKING	ENABLED	
VERTEX MONITORING	ENABLED	
BLINDENGELDGUTACHTEN	DISABLED	
FUEHRERSCHEINGUTACHTEN	DISABLED	
ESTERMAN	ENABLED	
BLUE - YELLOW	ENABLED	
KEYBOARD	ENABLED	
SITA	ENABLED	
KINETIC	ENABLED	
CUSTOM TEST	ENABLED	
PERSONALIZED ID		12

CARL ZEISS MEDITEC INC.
5160 HACIENDA DRIVE
DUBLIN, CA 94568
PHONE 1 877 486 7473

J.3 System Log

The principle role of the System Log is to attempt to keep track of all the 'events' that occur within the instrument. For example, an event can be a system restart (switching the instrument power to ON), recording an error code, showing the results of an attempt to rebuild the hard disk database, or the installation of a new revision of software, just to name a few. The date and time when each event occurred appears prior to each logged event. Note that there will be instances when an event cannot be logged because of an instrument malfunction. The log also contains the serial number of the instrument and the hardware option number (see Appendix G).

The log, which is stored on the hard disk, is a circular disk file containing up to 1000 entries (about 18, 8½ x 11" pages). The 1001st entry will write over the first entry in the log file. The most recent event will be recorded as the last entry in the log unless there are currently 1000 entries.

The instrument operator can print out the log. The service engineer can print out and clear (erase) the log. As part of a service call, after printing out and retaining the log, the current log entries may be cleared as described below. Obviously, if there is a malfunction with the hard drive, the log cannot be printed out or cleared.

When possible, the System Log should always be printed out when troubleshooting an instrument problem. It can often provide valuable 'clues' when attempting to solve an instrument malfunction. If obtainable, the log printout should always be included with any paperwork returned as part of a field service instrument repair.

To print out the log, perform the following:

1) From the Main Menu, select `System Setup`.
2) Select `Print System Log`.
3) After a short delay, the System Log will automatically print to the selected printer. The log cannot be displayed on the CRT.

To print out or clear the log, perform the following:

1) From the Main Menu, select `System Setup`.
2) Select `Additional Setup`.
3) Select `Diagnostics`.
4) When the ten key pad appears, enter the calibration password.
5) Select `System Log`.
6) Select `Print System Log` and, if necessary, `Clear System Log`.

Appendix K. Data Loss Recovery

Contents:

K.1 Data Loss Prevention Tips

There may be situations, due either to operator misunderstanding or instrument malfunction, when the patient database or backup becomes corrupted or is reported as inaccessible.
Prior to completing any data loss related service call, always take the time to discuss the following data loss prevention tips with your customer.

- Ensure that your customer understands the importance of routinely backing up their patient data files. At minimum, this should include a copy of each floppy diskette and at least one magnetic optical disk. In fact, it is recommended that two magnetic optical disks are used and rotated every other backup. Consult the User's Manual for recommendations on the frequency of backup.

- Stress the importance of proper handling and storage of floppy diskettes and magnetic optical disks. Make certain that tapes are stored at least five feet away from any magnetic field. This includes not storing the diskettes on the top surface of the HFA II.

- Verify that only high-quality, double-sided, high-density floppy ***preformatted*** diskettes are used. Only DOS preformatted floppy diskettes will operate in the HFA II. A preformatted diskette can be reformatted on the HFA II.

- Make certain that the customer understands that they should not remove a floppy diskette or magnetic optical disk from the drive during a read or write operation. Point out the floppy drive icon in the upper right of the CRT display. Ensure that they observe this icon and only remove the diskette at the appropriate time.

- If frequent data loss occurs, verify the power source that the HFA II is connected to meets instrument operational requirements. A fluctuating line voltage can cause database related problems. Use of an uninterruptible power supply or UPS may help prevent data loss. Operational and UPS requirements are discussed in Section 1.

C Explain the difference between a file that has been copied and one that was backed up using the Backup/Restore function in the disk menu. A copied file is one that was stored to the floppy drive after completion of a test, one which was copied or duplicated using the Copy or Duplicate Test functions in the File Functions Menu. The copied file can be placed onto the floppy drive and recalled for viewing on the CRT. A file that was backed up using the Backup/Restore function cannot be accessed and viewed on the CRT. This concept is often a source of confusion.

K.2 Database Structure

Two identical patient databases coexist on the hard disk drive. The Primary or principle database, and the Secondary database which is a duplicate of the Primary.

The Primary database is the principle database. That is, when a test is saved to the hard disk drive, it is first saved to the Primary database and then saved to the Secondary database. When a test is recalled from the hard disk drive, it is only recalled from the Primary database. The Secondary database functions are transparent to the customer.

K.3 The Five "R's" of Database Recovery

There are five basic steps to consider when attempting to correct a database problem:

Reboot.....Recover.....Reconstruct.....Rebuild.....Restore

- **Reboot**

If the patient database cannot be accessed, Rebooting or turning the power off-on may correct the problem. This is often the simplest step to try. The instrument will attempt a recovery if either (but not both) of the databases fails to verify or if recovery was deferred (floppy only) prior to shut down. Rebooting or cycling power will also cause the instrument to present the operator with the on-screen message to recover or make the instrument a floppy-only system.

- **Recover**

The Recover option is very much like performing a restore from magnetic optical disk. This option is selectable only when a problem with the Primary database has been detected. If a problem occurs within the Primary database, the operator will receive an on-screen message to either attempt to recover the database (`Fix Now`) or temporarily make the instrument a floppy-only system. If recovery is selected, the software will attempt to copy the Secondary database over the corrupted Primary database. If successful, the database has been recovered. If unsuccessful, then the hard disk database is disabled and the instrument can only be operated with a floppy disk database until it is repaired. The doctor can also defer recovery until the end of the day or automatically on boot the next day. This will allow the doctor to continue using the instrument so that he/she can test the patients in the waiting room.

The floppy-only option will allow the instrument to save only to the floppy disk drive. This enables the operator to continue to save patient exams until a service technician can repair the hard disk drive problem. The floppy-only option would normally be selected if the Recover option has failed, the user has just completed a test and immediately needs to save it to disk, or does not currently have the time to wait for the Recover option to complete.

- **Reconstruct (or "Cleanup" on Additional Setup)**

The hard disk Reconstruct option is described in Appendix K.4, Database Utilities.

- **Rebuild**

The hard disk Rebuild option is described in Appendix K. 4, Database Utilities.

- **Restore**

The restore option is often the last step taken in database recovery. Either the magnetic optical disk or the floppy backup is restored to the hard disk.

K.4 Database Utilities

In the event of a patient database problem, there are a number of software features designed to protect the integrity of the patient database. These utilities, described below, can be accessed and activated via the calibration portion of the software. Refer to Section 4 for access details.

The Database option provides six primary utilities which can be used to either rebuild, reconstruct or delete the patient database. Refer to Section 9 (Database Management) in the Humphrey Field Analyzer II - i User's Guide.

K.4.1 Rebuild Hard Disk Database

This utility attempts to rebuild the corrupted index files and reconstruct the checksums that may exist on the hard disk. Selection opens a pop-up window warning the user that rebuilding may take a very long time. The options to continue (OK) or Cancel are provided. This can be a lengthy process depending on the number of files on the hard disk drive. This option is also available to the user via the System Setup, and Additional System Setup menu selections. The rebuild function will first attempt a simple recovery if it detects a database failure. If recovery succeeds, rebuild is done. Otherwise, it starts rebuild. If rebuild fails but the primary database can be opened then a reconstruct is automatically attempted.

> ***NOTE:*** *When rebuild of the primary database succeeds either the first attempt or after subsequent reconstruction the primary database is copied to the secondary database. The customer will see "Ensuring Database Integrity....." along with a progress bar.*

K.4.2 Rebuild Floppy Database

This utility attempts to rebuild any corrupt files that may exist on the floppy diskette. Selection opens a pop-up window asking the user if they wish to continue. The options to continue (OK) or Cancel are provided. This option is also available to the user via the System Setup, and Additional System Setup menu selections.

K.4.3 Delete Hard Disk Database

This utility will delete the entire patient database. All other files on the hard disk will not be affected. Selection opens a pop-up window informing the user that the entire database will be deleted. The options to continue (OK) or Cancel are provided.

K.4.4 Delete Temporary Database

This utility deletes any temporary database copies that reside on the hard disk. Selection will begin the deletion process. There is no option to cancel.

K.4.5 Reconstruct Database

The reconstruct utility is very similar to copying the hard disk database to floppy disks, deleting the hard disk database and then copying the floppy disks back to the hard drive. (The copy process differs from the restore process in that the copies only contain the patient data and not the hard disk File Allocation Table, which is more susceptible to corruption.) When reconstruct is selected, the Primary database is copied into a temporary location on the hard disk drive rather than the floppy disks. The Primary database at the original location is then deleted, and the Primary database at the temporary location is renamed (moved) back to the original Primary location. The "Cleanup Hard Disk Database" utility will remove any patients that have no tests. These options are also available to the user via the *System Setup, and Additional System Setup* menu selections.

K.4.6 Secondary Database Utilities

Selecting this option provides nine more database utilities. Each utility is described below.

- **Compare Database Sizes**

This function does a file by file byte level comparison of both the Primary and Secondary databases to verify that they are of the same size. This is a quick test that performs a count of the number of files in each database. Under normal system conditions, the two databases should always be equal. If they are not, the recovery option should be performed.

- **Verify Primary Database/Verify Secondary Database**

Checks to see that the database can be opened. Each database is verified independently.
Copy Primary to Secondary/Copy Secondary to Primary

Once it has been determined that either the Primary or Secondary database has a problem, this utility allows the service technician to copy the good database over the problem database.

> ***NOTE:*** *This is what happens during recovery. It is better to first select Rebuild if you know there is a failure. Rebuild will try to recover if there is a problem. These copy commands are low level equivalents to what happens automatically.*

C **Primary Read Test/Secondary Read Test**

Sometimes a database will open (verify) but will fail a read test. This utility checks each record in the database. Depending on the number of files on the hard disk, this may be a very time consuming test. Each database is read independently.

C **Delete Primary Database/Delete Secondary Database**

Once it has been determined that either the Primary or the Secondary database has a problem, this utility allows the service engineer to delete the problem database.

K.5 Floppy Diskette - Troubleshooting Dialogue

If the floppy diskette database is corrupted or inaccessible, the customer will usually report the following on-screen error message: *"Floppy Disk Database is Not Accessible - Retry, Rebuild, or Cancel"* or similar error message.

Check/Perform the Following:

C Is the diskette IBM formatted?
C Does the customer have a backup copy?
C Is this the only diskette that has a problem or are there others? If all diskettes have problems, there may be a problem within the floppy subsystem (floppy drive, floppy cabling, and/or floppy disk controller on the CPU PCB). Refer to Section 5 for diagnostic troubleshooting procedures.
C Ensure that the file(s) on the diskette is a copied file and not one that was created as part of a backup using the Backup/Restore function.
C Check the diskette; is it damaged in any way? Is the diskette label applied properly, or does it cover a portion of the read access door?
C Check the System Log for database-related errors. The floppy database will be indicated as device 3.0. In general, errors like 7000c, 230001, f00de or similar errors are associated with the floppy drive patient database.
C Attempt a rebuild. From the Main Menu, select System Setup, Additional Setup, and then Rebuild Floppy Disk Database. This process will attempt to repair the damage. A rebuild can also be executed within Calibration. Refer to Section 4 for details.

- If the rebuild fails, try viewing the diskette on a PC. Proceed to the "A" drive and attempt to look at the directory. You cannot view individual patient files, but should be able to see the directory. The directory will consist of files like PATS.DAT, PATS.IDX, PDB.DAT,
  RXS.DAT, etc. If the diskette is part of a backup that was made using the Backup/Restore function you will only see BACKUP.PDB
- If the directory cannot be seen or looks damaged, try executing scan disk on the PC. It has been reported that this may partially repair a corrupted floppy.
- If all of the above has failed and there is not a duplicate of the diskette, contact Technical Support for additional assistance. Also, advise your customer to format and begin using a new diskette.

K.6 Hard Disk Drive - Troubleshooting Dialogue

The following dialogue is intended to assist you in solving database related problems. This is only one approach; each situation is unique. Ultimately, it is the service engineer's choice to determine which utilities should be used and which approach should be taken. The dialogue utilizes the "5 Rs" of database recovery (Appendix K.3).

If the hard disk drive database is corrupted or inaccessible, the customer will usually report the following on-screen error message: *"Hard Disk Database is Not Accessible - Would You Like to Recover?"* or *"A hard drive database failure has occurred. You can only use a floppy disk until the hard disk drive database is repaired."*

Check/Perform the following:

- Does the customer have a backup? This can either be copies, a backup made using the Backup/Restore function, or a magnetic optical disk.
- Check the System Log for database-related errors. The hard drive database will be indicated as device 4.2. In general, errors like "hard drive error" or similar errors are associated with the hard drive patient database and/or the hard drive subsystem (hard disk drive, hard drive cabling, and/or the controller on the CPU PCB). Refer to Section 5 for hardware/diagnostic troubleshooting procedures.
- If a floppy diskette is inserted in the floppy drive, remove it and turn the instrument power Off/On (Reboot). Then make a second attempt to view the hard disk database. Sometimes a problem with the floppy diskette may be indicated as a problem with the hard disk drive or database.
- Was the option to Recover attempted? If not, attempt to recover the database. The recover option will normally be displayed either after the reboot or if you attempt to access the database. Select the "`Fix Now`" button in the Fix Now/Floppy Only alert.
- If the recover option fails, proceed to the Diagnostics/Calibration Menu and select the Reconstruct database option. The Reconstruct utility can only be attempted if the database can be opened. If it cannot then use Rebuild to perform rebuild/reconstruct.
- If reconstruct fails, attempt a hard disk Rebuild if the database can be opened.
- If the rebuild fails, and the customer *DOES NOT* have a backup of their database available, replace the hard disk drive with a new drive. Contact the Technical

Support Department and arrange to have the old drive returned. There may be a possibility that the data can be recovered.

- If the customer *DOES* have a backup available, choose the Restore utility. This will delete only the database from the hard disk. Once deleted, the Restore utility will continue to automatically restore the database, and check to see that all files have been restored and can be accessed (viewed and printed). Run at least one simulation test to ensure that the hard disk drive can also be written to as well.
- If the restore of the database does not correct the problem, attempt to initialize the hard disk drive (refer to Appendix L). Once initialization is complete, restore the database (and other customer set-ups — printer type, personalized ID, etc.) from a configuration backup floppy.
- If the initialization fails, it is likely to be a problem with the hard drive subsystem (hard disk drive, hard drive cabling, and/or the controller on the CPU PCB). Refer to Section 5 for hardware/diagnostic troubleshooting procedures.
- Once restore is complete, check to see that all test/patient files have been restored and can be accessed (viewed and printed). Run at least one simulation test to ensure that the hard disk drive can be written to.

K.7 Magnetic Optical Disks

If magnetic optical disk cannot be restored, the customer will usually report the following on-screen error message: “Backup Fails,” “Disk is Write Protected,” ” Insert a Disk with a capacity of at least nnnn,” “Your Database is Too Large to Fit on the Current Disk,” “Format Fails,” “Failure in Verification Phase I,” and “Failure in Verification Phase II.”

Check/Perform the Following:

> ***WARNING:*** *Performing a Restore will write over any files that currently reside on the hard disk drive. Ensure that you have copied (use the Copy function) any files currently on the hard disk on to a floppy diskette prior to performing the restore operation. If the “Replace” option vs the “Merge” option has been selected, option dialogue does not appear if a database failure has been detected.*

- Does the customer have more than one backup magnetic optical disk? If so, try backing up to the other magnetic optical disk or to a new magnetic optical disk.
- If the magnetic optical disk is new, try initializing it via the File Functions Menu.
- Contact the Technical Support Department and arrange to have the magnetic optical disk returned. There may be a possibility that the data can be recovered.
- Check the System Log for the above mentioned error types. There may be a problem with the magnetic optical disk subsystem (magnetic optical disk drive, magnetic optical disk cabling, or the controller on the CPU PCB). Refer to Section 5 for diagnostic troubleshooting procedures.

(This page left intentionally blank)

Appendix L. Initializing the Hard Disk

Hard disk drives are pre-initialized when ordered as a spare part. In the event hard disk initialization is required, it can be done at the repair site.

There are two types of initialization: low level and high level. The low level initialization prepares the hard drive for the high level initialization. Data may not be stored on the hard drive if only the low level format has been done. High level initialization is required to save data on the drive.

All drives should come from the factory low level formatted. Current requirements for the *HFA II - i* require that the low level initialization uses FAT 16 format and has only one partition. That partition will make use of up to 2.1 gigabytes of disk space.

High level initialization can be done many times on a drive and is used to remove all data from a drive. The high level initialization is performed using the *HFA II - i* application system software.

The items listed below are stored as files on the hard disk drive. Initializing the drive will erase these files. Therefore, depending on the situation, attempt to acquire this information prior to initializing the hard disk. All of the items will need to be restored after the drive has been initialized and or replaced.

- Application system software - Ensure that you have the latest revision to load on the hard disk.
- Setup Configuration - Items such as Alter Main Menu, printer type, personalized ID, head tracking On/Off, etc. are all stored on the hard disk drive. The configuration should either be written down or backed up onto a floppy diskette prior to initializing the hard disk.
  To back up the Setup configuration, proceed as follows:
  1) From the Main Menu, select System Setup, and Additional Setup.
  2) Select Backup Configuration and follow the on-screen instructions.
- Patient Database - Reload the patient database for all models that can save patient files on the hard drive. If the instrument is so equipped, this can be done using the Magnetic Optical Diskette and/or floppy diskettes.
- Calibration Configuration - All of the calibration values as well as the model, serial number and option codes are stored on the hard drive. These values are stored on the *HFA II - i* Series Calibration Backup disk.
  To back up the Calibration configuration, proceed as follows:
  1) From the Main Menu, select System Setup, and Additional Setup.
  2) Select Diagnostics.
  3) When the ten-key pad appears type in the password.
  4) Select Save. Place a disk in the floppy drive and follow the on-screen prompts.

High Level Initialization of the Hard Drive.

1) Switch OFF power to the instrument.

2) Insert the 3.5" floppy disk #1 containing the application system software into the floppy drive.

3) Switch ON power to the instrument.

4) You will see a ***VX Ld 1.2 ....*** display on the monitor as the operating system is loaded from the disk to the CPU memory. Upon completion of loading you will see the following display:

HFA II - i Installer - Rev C1.1
0. Format the hard disk
1. Start Installation

5) Select 0 to start the hard disk initialization. A ***Formatting the Hard Drive*** prompt will be seen on the screen.

6) Upon completion of the formatting you will be returned to the following display:

HFA II - i Installer - Rev C1.1
0. Format the hard disk
1. Start Installation

WARNING:

ALL DATA ON THE HARD DRIVE WILL BE LOST DURING THIS PROCESS.

This function permits the service engineer to format and initialize the hard disk drive. Performing this test destroys all data on the hard disk drive (operating system, patient data, printer type, setup data, calibration data and alter main menu data). This function performs a high-level format of the hard disk drive.

Low Level Formatting of the Hard Drive

If for some reason you receive a hard drive for the *HFA II - i* that is not formatted or requires formatting, it is possible to perform a low level format with a Windows 95-98 system disk that contains FDISK.exe and FORMAT.com.

Note **-** You must have a license for the Wiindows 95 -98 system disk. If you do not, you will need to use a preformatted hard drive. A preformatted hard drive can be ordered from your Carl Zeiss Meditec Parts representative

1) Insert the Windows 95 -98 system disk with FDISK and FORMAT in to the floppy drive of the *HFA II - i*.

2) Turn the power switch to ON.

3) At the A: prompt type FDISK and press ***Enter***.

4) Follow the screen prompts to partition a single partition using FAT 16.

Note **-** *FAT16* will limit the usable drive capacity to 2.1 gigabytes.

5) Reboot the system and at the A: prompt type FORMAT and press the ***Enter*** key.

6) The drive is now ready to have the operating system loaded. Do not load Windows operating systems on the drive as it is not compatible with the application software.

(This page left intentionally blank)

Appendix M. Loading Application Software

Customer-installable software updates are supplied to the customer on floppy disks. Currently, the software consists of four diskettes. These four diskettes are referred to as the application system software, or simply the system software.

The system software consists of several other different software revisions, all of which (except the installation software) get loaded into the instrument during the software installation process. The system software consists of the following:

- Installation software
- Operating system software — loads onto the hard disk drive
- Language software — loads onto the hard disk drive
- CPU (boot) software — loads onto the hard disk drive
- Motor Driver software — loads into the flash IC on the Motor Driver PCB

To view the revision levels of each software, refer to Appendix J, System Screens and Logs.

In service situations where the hard disk is being replaced, or the service engineer suspects possible corruption of the system software on the hard disk, the system software can be reloaded onto the hard disk using the latest system software floppy disks.

Loading System Software:

1) Switch the instrument power to OFF .

2) Insert the 3.5" *HFA II - i* Series System Software floppy diskette labeled #1 into the floppy disk drive. The current software requires four diskettes. Future software versions may require more.

3) Switch the instrument power ON and you will soon see a ***VX Ld 1.2 ....*** display on the monitor as the operating system is loaded from the disk to the CPU memory. When complete, you will see the following display:

   HFA II - i Installer - Rev C1.1
   0. Format the hard disk
   1. Start Installation

4) Select 1 to start the hard disk initialization. A ***Copying Files*** prompt will be seen on the screen.

5) When the disk files are loaded you will see a ***Please Insert Disk # 2 and press any key*** dialogue displayed.

6) Remove disk # 1 and insert disk # 2. Press any key on the keyboard.

7) A ***Verifying Copy Disk*** and then ***Copying Files*** prompt will again be seen on the screen.

8) When the disk files are loaded you will see a ***Please Insert Disk # 3 and press any key*** message displayed.

9) Remove disk # 2 and insert disk # 3. Press any key on the keyboard.

10) A ***Verifying Copy Disk*** and then ***Copying Files*** prompt will again be seen on the screen.

11) When the disk files are loaded you will see a ***Please Insert Disk # 4 and press any key*** message displayed.

12) Remove disk # 3 and insert disk # 4. Press any key on the keyboard.

13) A ***Verifying Copy Disk*** and then ***Copying Files*** prompt will again be seen on the screen.

14) When the fourth disk files have been loaded you will see ***Completed copying files, remove floppy and cycle power to complete installation*** on the display.

15) Remove disk # 4 and turn the unit power to OFF.

16) Wait fifteen seconds and turn the unit power to ON.

17) Soon a ***Completing the installation of HFA II - i 51220.rev C1.1 52037.A1 Existing installed product HFA II- i XXXXX.revNN XXXXX.NN Install date MM-DD-YYYY*** display will be seen. This indicates the application code revision and the motor driver board code revision respectively of the newly installed software as well as the application code revision and the motor driver board code revision of the previously loaded software. The XXXXX is the part number of the software, NN is the revision number, and MM-DD-YYYY is month, day and year that the previous software was loaded.

18) A progress meter will be displayed and will climb to the 100 % . You will hear three beeps during the load process indicating that the software is loading correctly.

19) When the load is completed an ***Installation successful, cycle power to begin using the installed software*** dialogue will replace the progress meter.

20) Turn the instrument power to OFF. Wait fifteen seconds and then turn the instrument power to ON.

21) When the instrument powers up to the main menu, select the "***i***" button from the top of the main menu. Verify that the correct revision of software has been loaded. The software revision level can be viewed opposite the "Operating System" listing.

22) The installation is now completed.

NOTES: *If the system software was loaded on a newly initialized drive, you will encounter a number of system errors and messages before the main menu is displayed. One of the messages will indicate that a new patient database will be created.*

If the software was loaded on a newly initialized drive you will need to restore the calibration configuration, unit configuration, patient database and any software options that were on the unit prior to the initialization. See section 4.8 for instructions on restoring the calibration configuration.

(This page left intentionally blank)

Appendix N. Special Software Options

Designed into the software are options that can only be enabled using a particular password. One such feature is the Ocular Hypertension Treatment Study or OHTS software. The password for OHTS can be obtained from the Technical Support Department. Once the password has been obtained, perform the following steps to enable OHTS:

1) From the Main Menu, select `System Setup`.
2) Select `Additional Setup` and then select `Diagnostics`.
3) When the ten key pad appears, type in the specified password and select [Enter].
4) Select `OHTS` Option to ON.
5) The instrument is now enabled for the OHTS feature.

Currently, OHTS is the only software feature that may need to be enabled at a customer site. As other specialized options become available, they will be announced in a service bulletin.

(This page left intentionally blank)

Appendix O. Upgrades

At this time the following upgrades are authorized for the HFA II - i:

Magneto Optical Drive Upgrade (P/N 52969) - The Magneto Optical Upgrade was created to provide an efficient backup method for the 720i, 740i, and 745i HFA II - i models. Details as to the required parts, installation, and calibration procedures for this upgrade are provided in a service bulletin.

Kinetic Software Upgrade (P/N 53311) - The Enhanced Kinetic software program is now available for customers with HFA II- i models 740i, and 745i. The upgrade will include the enhanced kinetic program, custom kinetic and the SSA disability test. This upgrade is customer installable.

> ***NOTE:*** *All field upgrades (both domestic and international)* ***MUST be reported to Carl Zeiss Meditec****. If an upgrade is performed without the knowledge of Carl Zeiss Meditec, a future release of software (when loaded on the upgraded HFA II - i) will disable the unauthorized upgrade.*

(This page left intentionally blank)

Appendix P. Cable Diagrams

The Data Transfer cables are frequently used with the *HFA II - i*. Shown below are the cable diagrams for troubleshooting or fabrication purposes. The cables can also be ordered directly from Carl Zeiss Meditec Parts Department.

Data Transfer Cables

HFA I to HFA II - i Serial Cable (P/N 52416) - The HFA I to HFA II - i null modem serial cable is used when transferring patient data files from an HFA I to an *HFA II - i*. Refer to Appendix C for details on cable hookup and use. The cable is available in a ten foot length.

HFA I End (25-Pin Male)	*HFA II - i* End (9-Pin Male)
2	2
3	3
4	8
5	7
6	4
7	5
20	6

HFA II to HFA II - i Serial Cable (P/N 52417) - The HFA II to HFA II - i serial null modem cable is used when transferring patient data files from an HFA II to an *HFA II - i*. Refer to Appendix C for details on cable hookup and use. The cable is available in a ten foot length.

HFA II End (9-Pin Male)	*HFA II - i* End (9-Pin Male)
2	3
3	2
4	6
5	5
6	4
7	8
8	7

Appendix Q. Cleaning Optics

Cleaning Do's and Don't's

Do
- Use real cotton Q-tips (lens tissue can also be used)
- Always wet the Q-tip or lens tissue in the cleaning agent before cleaning
- Use reagent grade acetone whenever possible (isopropyl alcohol may also be used).

Don't
- ***Do Not*** use acetone or alcohol to clean the film wedge. Use only compressed air or a camel hair negative brush.

  NOTE: *Care should be taken when using compressed air as it may occasionally deposit moisture on the targeted surface.*

Assemblies that may be Cleaned

Assemblies that may be cleaned are listed below. Those marked with an asterisk (*) will require some recalibration after cleaning. Refer to Table 3-1 in Section 3 for guidelines. Assume that a newly cleaned assembly is the same as one that has just been replaced.

(Refer to the projection path diagram in Section 6 for assembly identification.)

Condenser lens
* Glass wedge
* Film wedge (see above note on cleaning)
* Color wheel
Upper lens
First projection mirror
Second projection mirror
Third projection mirror
Lower lens
* Brightness detector
Blue filter (glass)

WARNING: *Damage will occur to the Green Filter if cleaned with acetone.*

(This page left intentionally blank)

Appendix R. Optional Software Installation

A customer may be provided or purchase an optional software package. A current example of an optional software package is the Kinetic software package for *740i* instruments. Other optional software packages may be developed in the future. The optional software will be provided on a 3 ½" floppy disk and installed via the floppy drive.
The floppy disk will load and enable the instrument to run the optional software. Prior to loading the optional software, you should print the current software options in the "*i*" screen. After loading the software options you should verify that the options are enabled in the "*i*"screen. Additionally, you should verify that the options appear in the menus and are functional.

Loading the Software Options

1) Set instrument power to ON.

2) At the Main Menu, select ***System Setup***.

3) Select ***Additional Setup***.

4) Select ***Install Software***.

5) You will see a "*Insert an HFA Option Floppy Disk, then Press OK to begin installation*". Press **OK**.

6) A dialogue with *" Installing nnn, press OK to continue"* will appear. *Nnn indicates the software option that you are loading. In case of the Kinetic option, the nnn will be replaced with " HFA II Kinetic Tests 51123.A1?"* Select **Continue**.

7) *"Optional Software Installation in Progress..."* dialogue will appear. It will soon be replaced with *"Option software installation successful"*. Press **OK**.

8) Verify that the option is enabled by selecting it and using it.

(This page left intentionally blank)

CARL ZEISS MEDITEC

SERVICE BULLETIN

Instrument:	**General**	No.:	**GEN-ID02**
Subject:	**Service Bulletin Index**	Date:	**30 Apr 08**
Status:	**Informational**	Pages:	**2**

This bulletin replaces Service Bulletin GEN-ID01

This bulletin indexes all General (GEN) service bulletins issued to date. The bulletins are indexed by bulletin number.

The index will be updated periodically. Meanwhile, we recommend that you manually write into the index each new GEN bulletin you receive.

Note - *Bulletins that have been issued since the last revision of this index are marked by an asterisk (*).*

INDEX BY NUMBER

CARL ZEISS MEDITEC

SERVICE BULLETIN

Instrument:	**General**	No.:	**GEN-001B**
Subject:	**Format for Service Bulletins**	Date:	**11 Jul 05**
Status:	**Informational**	Pages:	**2**

This bulletin replaces Service Bulletin GEN-001A

The following is the standardized format of a typical Carl Zeiss Meditec Service Bulletin.

Each bulletin will have the following information in the heading on page 1:

Instrument:

Describes what instrument type the bulletin applies to. Some of the valid instrument types include: Optical Coherence Tomography, Lens Analyzer, Atlas/CT, and so on. A special instrument type called ***General*** is used for bulletins that apply to all instruments; for example, this bulletin. If a bulletin applies to more than one instrument type, but not to all instruments, multiple bulletins will be issued.

Number:

Each bulletin will be assigned a unique bulletin number. It will start with a 2, 3, or 4 letter and/or number designation followed by a dash (-) and a 3-digit number. The letters correspond to the instrument type and the numbers are assigned chronologically. Examples are OCT3-001, LA-021, GEN-013. A revised bulletin will have a letter designation after the numbers such as GEN-001**A**.

Subject:

A short summary of the subject matter covered is provided.

Date:

This shows the date when the bulletin was issued.

Status:

Gives the status of each bulletin. Valid statuses are:

Informational - The bulletin provides information for the Field Support Engineer regarding an instrument. It does NOT contain any directives regarding changes to any instrument assemblies.

Retrofit on Failure (Implement on Failure) - The bulletin provides instructions on how to perform required changes to specific instrument assemblies. The changes must be performed the next time the affected assemblies fail. This has a low level of urgency among the retrofit bulletins. Typically, the changes may involve cost reduction or availability issues.

Retrofit on Next Field Visit (Mandatory, Implement on Next Call) - The bulletin provides instructions on how to perform required changes to specific instrument assemblies. The changes must be performed the next time the Field Support Engineer visits the office where the instrument is installed, even if there is no failure in the instrument. This has a medium level of urgency. Typically, these retrofits may involve reliability issues.

Retrofit When in the Area (Mandatory, Implement When in the Area) - The bulletin provides instructions on how to perform required changes to specific instrument assemblies. Arrangements must be made by the Field Support Engineer to perform the changes on as many instruments in the area as possible. These retrofits have a high level of urgency. They may involve reliability and clinical issues.

Retrofit as Soon as Possible (Mandatory, Implement Immediately) - The bulletin provides instructions on how to perform required changes to specific instrument assemblies. Arrangements must be made by the Field Support Engineer to perform the changes on all the instruments in the shortest time possible. Typically, the scheduling of these retrofits must be coordinated by the Regional Service Managers because of the very high level of urgency involved.

Retrofit, as Required (Implement, as Required) - This bulletin provides instruction on how to perform changes to specific situations. An example would be upgrading to a specific software revision only if certain hardware is being used. The changes are usually performed the next time the Field Support Engineer visits the office where the instrument is installed, even if there is no failure in the instrument. This usually has a medium level of urgency (unless otherwise specified). Typically, these retrofits may involve reliability issues.

Pages:

The total number of pages in the service bulletin.

CARL ZEISS MEDITEC

SERVICE BULLETIN

Instrument:	**General**	No.:	**GEN-002G**
Subject:	**Test Equipment Calibration & Certification**	Date:	**28 Apr 08**
Status:	**Informational**	Pages:	**2**

This bulletin replaces Service Bulletin GEN-002F & GEN-007C.
This bulletin has been completely revised.

Domestic Field Service

Calibration controlled test equipment, issued to the Domestic Field Support Engineer, is managed as an exchange pool by the Carl Zeiss Meditec Calibration Lab located in Dublin, California. The Calibration Coordinator will send notification as to when specific test equipment is due for recalibration.

International Field Service

1) Calibration Controlled Test Equipment

Refer to "Table 1" for required action based on test equipment type.

2) Periodic Certification and Charges

Equipment calibration is required **Annually (Yearly)** for all of the items listed in Table 1, except where designated.

Note - *It is the User's responsibility to ensure that periodic calibration certification is performed before the specified expiration date. A calibration sticker, attached to the test equipment, indicates the date of certification and its expiration date.*

Shipping charges are not included in the calibration prices. User is responsible for shipping charges to and from Carl Zeiss Meditec.

Additional charges for parts and labor will apply if the equipment is damaged or requires major repair before calibration can be performed. If the test equipment is not repairable, you will be notified and the defective test equipment will be returned to you. You will then need to order new test equipment.

3) Equipment Calibration Certification

The calibration of test equipment does not include the cost for a calibration certification certificate. Certification of test equipment requires an additional cost per kit or item (including any sensors, loads, or elements). **A calibration certificate may be requested for an additional $75.00 per certificate.**

Table 1 – Calibration Controlled Test Equipment

P/N	DESCRIPTION	CUSTOMER COST
Test equipment listed below **Must Be** purchased from and returned to Carl Zeiss Meditec, Dublin, California for recalibration. These items cannot be purchased locally or calibrated locally.		
28393	LA3 FS Calibration – Test Lens Set (**Every 3 Yrs**)	$350.00
36676	HARK Field Service Tool Kit (**Every 3 Yrs**)	$350.00
47520	LCR Drum Calibration Assembly Tool	$175.00
59161	AC-OCT (Visante) Field Service Tool Kit *	$750.00
63506	SD-OCT (Cirrus) Field Service Tool Kit *	$750.00
14905	Soligor Light Meter	$250.00
Test equipment listed below may be either purchased locally or purchased from Carl Zeiss Meditec, Dublin, California. This test equipment may be calibrated by a local qualified vendor, or Carl Zeiss Meditec, Dublin, California can also perform coordination of this service.		
38874	Newport Power Meter, Model 840C	$500.00
38873	Newport Detector Model 818-SL/CM	$325.00
No P/N	Newport Detector Model 818-IR	$325.00
No P/N	Newport Power Meter + one Detector	$635.00
No P/N	Field Master Console	$635.00
No P/N	Field Master Console GS	$635.00
No P/N	Field Master Detector Model LM-10	$325.00
No P/N	Field Master Detector Model LM-P5	$325.00
No P/N	Field Master Detector Model LM-2 VIS	$250.00
No P/N	Field Master + 3 Detectors	$1200.00
No P/N	Field Master GS + 3 Detectors	$1200.00
No P/N	Field Master Detector Model LM-2 IR	$325.00
No P/N	Field Master + 4 Detectors	$1400.00
No P/N	Field Master GS + 4 Detectors	$1400.00
Test equipment listed below can only be purchased locally and calibrated by a local qualified vendor.		
No P/N	DMM / DVM	Source Locally
No P/N	Oscilloscope	Source Locally

* Does not include the Power Meter

CARL ZEISS MEDITEC

SERVICE BULLETIN

Instrument:	**General**	No.:	**GEN-003Y**
Subject:	**Technical Support Product Responsibilities**	Date:	**10 Apr 08**
Status:	**Informational**	Pages:	**3**

This bulletin replaces Service Bulletin GEN-003X

The following tables indicate the current Primary (1), Secondary (2), Backup (3), and Instrument Training (4) product responsibilities for the Carl Zeiss Meditec Technical Support Department.

Names in **RED** indicates a Technical Support Manager:

- **Ralf Homberg** – Senior Manager, Technical Support
- **Jurgen Billhofer** – Manager, Technical Support: Hardware / Software
- **Carl Gagnon** – Manager, Technical Support: Training / Documentation

Names in **BLUE** indicates a Technical Support Supervisor:

- **Marty Rohman** – Supervisor, Technical Support

Documentation: For inquiries pertaining to distribution of service documentation (service bulletins, service manuals, etc.), contact **Gina Giuliano** @ ex 4287. For other service documentation matters, contact the appropriate Technical Support Engineer for the associated product.

Phone: U.S.: 1-877-486-7473 International: 001-925-557-4100

Fax: 925-557-4652

Training: For inquiries pertaining to Service training, contact:

- **Marg Southern** @ extension 4497 or
- **Steven Braman** @ extension 4489.

TECHNICAL SUPPORT PRODUCT RESPONSIBILITIES — EYE CARE

Product	Jurgen Billhofer T16	Marty Rohman T03	David Allen T05	Ricky Ragacho T18	Allen McGee T19	Manny DeGuzman T20	Mark Acebedo T22	James Mintsioulis T24	Yukari Marie Kawaguchi T25	Tim Wong T27	Marco Carrillo T33	Ralf Homberg T14	John Franke T06	Ray Giron T11	Michael Hoch T15	Michael Elrod T21	Scott Buzby T28	Todd Moore T29	Tali Tolliver T30	Carl Gagnon T01	Mark Kesler T02	Jason Ellis T09	Steven Braman T07	Denny DuGal T13
HFA II / HFA IIi			2			2	2	2		1	1									3		2	4	4
FDT / MATRIX			1				2													3		2	4	4
HARK Series (597–599)		1		2	2																		4	4
HARK ACUITUS (5000–5015)		1																				2	4	4
LA 350 / 360 / 370 / 380		3		2	2			2														2	4	4
ATLAS / CT Products		3		2	2			2	1													1	4	4
IOL MASTER			1	2	2																	1		4
OCT1 / OCT2 (2000 / 2010)																				3	1		4	
OCT3 / STRATUS / 3000		3	2	2		2	1	2	2						3						3	2	4	4
VISANTE AC-OCT		3				2	1	2								3							4	4
CIRRUS HD-OCT / 4000		3					1	2													3		4	4
GDx/ACCESS/LEGACY	3			1	1	1	2				1										3		4	4
POWER TABLES			2					1												3				
YAG 2		1	2																					4
YAG 2+		1	2																					4
YAG 3		1	2			2			1															4
532		1	2			2			1															4
PDT		1	2																					4
SLIT LAMPS		3											1							3				4
VIDEO DOC SYSTEM													1											
ZEISS FF450 / 450+												3	3 / 4	1	3	2								
VISUCAM Lite												3	1 / 4	2	3	3								
VISUCAM PRO NM/FA										3			1 / 4						2					
ZEISS VISUPAC												3	3 / 4	2	3	1								
GENERAL NETWORKING				3		3	3	3				3	3	3	2	1 / 4	1	1						

TECHNICAL SUPPORT PRODUCT RESPONSIBILITIES — SURGICAL

Product	Ralf Homberg T14	Gary Jefferson	Joseph Beaulieu	Lutz Heinrich	Michael Kersten	Jimmy Chau
PENTERO MICROSCOPE		1 / 4	2 *	2 *	2 *	1
OPMI MICROSCOPE		2 *	1	1 / 4	1 / 4	2 *

* Limited to part lookups only

Loupes Technical Support – Carol Michalec
c.michalec@meditec.zeiss.com
Phone: (914) 681-7825

OR

Tiffany Williams
t.williams@meditec.zeiss.com
Phone: (877) 486-7473 – ext. 4214
(925) 557-4214

CARL ZEISS MEDITEC

SERVICE BULLETIN

Instrument:	**General**	No.:	**GEN-004B**
Subject:	**General Guidelines for Assembly Level Troubleshooting**	Date:	**11 Jul 05**
Status:	**Informational**	Pages:	**4**

This bulletin replaces Service Bulletin GEN-004A

The following pages contain General Guidelines for Assembly Level Troubleshooting. This procedure is designed to be followed on any service call. It is not specific to any one instrument.

Introduction

Field experience has proven that a structured approach to problem solving is the key to effective service. This bulletin is intended to provide this structured approach for solving problems on any instrument. The troubleshooting aids in this section will help you to diagnose operating difficulties and system malfunctions.

General Guidelines for Assembly Level Troubleshooting

On-site assembly level troubleshooting poses unique and complex challenges to the Field Support Engineer. In addition to identifying and replacing the faulty assembly, the Field Support Engineer must often travel great distances to the customer location, resolve operator errors, and identify power and environmental causes of problems while satisfying the customer's perception of quality service.

A structured approach to resolving field problems can greatly increase customer satisfaction and the Field Support Engineer's effectiveness. There are seven major tasks in resolving field equipment problems:

Prior to Going On-Site

1. Obtain a Service History for the Instrument
2. Query the Operator of the Instrument
3. Check for Service Bulletins that Address the Problem

While On-Site

4. Have the Operator Demonstrate the Problem
5. Resolve the Obvious
6. Substitute the Failing Assembly
7. Confirm the Repair

Each of these tasks is explained on the following pages.

Prior to Going On-Site:

1) Obtain a Service History for the Instrument

Knowledge of previous problems will assist your troubleshooting efforts. Find out when the last Preventive Maintenance (PM) service call was performed (if applicable). If a PM is due, or will be due shortly, be prepared to perform this task in addition to the repair.

2) Query the Operator of the Instrument

Get a description of the problem and inform the operator that you will need him/her to demonstrate the problem to you when you arrive. A description of the problem should include the symptoms displayed and also the type of problem. Determining the type of problem helps you establish your approach to solving the problem and confirming the repair. All problems can be broadly categorized into one of three types:

- ► **Solid Failure** - the problem presents itself continuously.
- ► **Intermittent Duplicable** - the problem is intermittent in nature. Usually a specific sequence of events reproduces the intermittent symptom, although occasionally these problems may be random in nature. By performing the proper sequence of events, the problem can usually be reproduced. If a sequence of events readily reproduces the problem, examination of this sequence of events may help identify the faulty assembly.
- ► **Intermittent Non-Duplicable** - the problem is intermittent, and all reasonable attempts at recreating the symptoms fail. These are the most difficult problems to resolve.

3) Check for Service Bulletins that Address the Problem

If a service bulletin addresses a resolution, be sure to take the necessary equipment to perform the changes.

While On-Site:

4) Have the Operator Demonstrate the Problem

This is very important. Before doing anything, always have the operator attempt to demonstrate the problem to you. (Of course, good judgment needs to be applied here in the case of intrusive surgical instruments.) By having the operator demonstrate the problem, you may solve the problem immediately, or avoid some incorrect assumptions. Having the operator demonstrate the problem will *ALWAYS* result in one of the following:

- ► ***Reveal Operator Error -*** You may immediately see that the cause of the problem is operator error. You then have the opportunity to train the customer in the proper use of the instrument, instead of spending time troubleshooting a nonexistent instrument problem.
- ► ***Demonstrate specific problem sequence -*** The operator will show you the specific sequence of events needed to reproduce the problem, reducing your diagnostic time.
- ► ***Help Form Ideas -*** The operator may not be able to duplicate the problem. However, the sequence of steps used to demonstrate the problem will give you ideas on how to pursue the problem in other ways. In this case you have the opportunity to explain to the customer the difficulty in resolving a non-duplicable problem.

5) Resolve the Obvious

Obvious mechanical or physical defects should be resolved when discovered. Often, resolving the obvious will lead you to the real problem.

6) Substitute the Failing Assembly

Once you have deduced which assembly is at fault, or is suspected to be at fault, it should be substituted with a known good assembly.

7) Confirm the Repair

After an assembly is replaced, confirmation should be made by reinstalling the failing assembly to witness the original symptom. You are then assured of the effectiveness of the repair, and of the need to utilize your spare assembly. Also, the number of "No Problem Found" PCB's returned to the Carl Zeiss Meditec Repair Center is greatly reduced.

Confirming the repair to the customer often helps to bolster confidence in your abilities. To avoid repeat service calls it is especially important to confirm intermittent problems. Time spent confirming a repair is time well spent.

If the problem still exists, *reinstall the original assembly that you removed*, then continue troubleshooting.

Solving Solid Failures

It is usually straightforward deductive logic or electrical checks that will lead you to replace the faulty assembly. After replacement of the assembly in question resolves the symptom, it is imperative that you *CONFIRM THE REPAIR* by reinstalling the original assembly and witnessing the original symptoms again. For many assemblies this is the only means of positively verifying that the replacement circuitry has resolved the problem.

Solving Intermittent Duplicable Failures

These failures are resolved in the same manner as solid failures but always require more time to resolve and confirm.

The frequency of the problem helps you determine how long it will take to verify a repair. A good rule of thumb when troubleshooting intermittent problems is: 2 times the frequency of the symptom gives an 80% confidence level of the repair.

EXAMPLE:

Problem

The problem appears only about once an hour. The sequence of events needed to reproduce the problem leads you to believe a circuit board is the likely cause.

Solution

The suspected circuit board is replaced. To provide an 80% confidence level that the circuit board resolved the problem, the instrument will need to be tested for 2 hours without failing.

Solving Intermittent Non-Duplicable Failures

These failures present the greatest difficulty to the Field Support Engineer. The most effective means for resolving these types of problems requires careful thought and the utilization of all available resources that the Field Support Engineer possesses. It is important that before replacing an assembly, good solid rationale for its replacement be developed and a backup plan devised in case replacement of the assembly does not affect the symptom. It is best NOT to replace any hardware until solid rationale for replacement is clearly evident. Once an assembly is replaced by a Field Support Engineer, the customer's expectations are set for a hardware resolution to the problem. This can prove to be a handicap. A good sequence to follow for resolving intermittent non-duplicable problems is:

1) Analyze the service history in detail. Look for trends or the possibility of a previous repair inducing the problem.

2) Query the operator(s) at length for any other clues such as:
   - ► Times of failures;
   - ► More failures with certain operators.

3) Watch the operators set up, use, and store the instrument.

4) Check all Service Bulletins.

5) Contact other Field Support Engineers involved in previous repairs.

6) Look at the operating environment - static, power, grounding, temperature or rate of temperature change, humidity, etc.

7) Contact your Technical Support Specialists.

8) Keep a record of everything you've done to solve the problem.

9) Document the customer service report. Record what you feel should happen if the problem returns. This will help a different Field Support Engineer in the resolution of the problem.

10) Give the customer a thorough update on the situation.

11) Educate the customer on logging pertinent information that may benefit a Field Support Engineer should the problem return. Often, engaging the customer in the pursuit of a solution emphasizes the difficulty of the situation. In some instances, the customer may welcome the feeling of being involved in resolution of the problem.

CARL ZEISS MEDITEC

SERVICE BULLETIN

Instrument:	**General**	No.:	**GEN-005A**
Subject:	**Use of Static Protection Kit**	Date:	**17 Aug 98**
Status:	**Mandatory**	Pages:	**1**

This bulletin replaces Service Bulletin GEN-005

Static Protection Kit, P/N 20928

The Static Protection Kit is essential for protection of electronic components against electrostatic discharge whenever you are disassembling or handling any PCBs or electronic components. The kit contains the following items:

- a bench mat with permanently attached alligator-clip ground lead;
- a banana plug lead with snap connector;
- an adjustable wrist cuff.

The static protection kit must be properly grounded, and you must be wearing the wrist cuff whenever working on any instrument with the cover removed.

To use the static protection kit:

1) Connect the bench mat alligator clip to a known good electrical ground point. Any unpainted screw, chassis surface, or metal component on the instrument is generally an acceptable ground point, *PROVIDED THAT THE INSTRUMENT HAS ITS POWER CORD CONNECTED AND IS PLUGGED INTO A GROUNDED POWER RECEPTACLE.* An acceptable ground point may be confirmed by using an ohmmeter to ensure that a resistance of less than 1 ohm is obtained between the instrument's power cord ground prong and the ground point in question.

   In situations where work is to be performed on an instrument and it is undesirable to have the instrument plugged into a power receptacle, an alternate grounding point is necessary. Usually, an acceptable ground point can be found at the cover screw for the AC power outlet.

   ***Note** – It is useless to use the static mat without it being properly grounded.*

2) After properly grounding the bench mat, connect the banana plug lead into the bench mat connector.

3) Connect the wrist cuff to the snap clip on the banana plug lead.

4) Adjust the wrist cuff to fit snugly around your wrist. The wrist cuff should always be worn when working on an instrument with the cover removed.

CARL ZEISS MEDITEC

SERVICE BULLETIN

Instrument:	**General**	No.:	**GEN-006C**
Subject:	**Approved Antistatic Bags**	Date:	**10 Apr 08**
Status:	**Informational**	Pages:	**1**

This bulletin replaces Service Bulletin GEN-006B

In our continuing effort to reduce potential ESD damage to assemblies shipped to and from the field, antistatic bags ***MUST*** be used when returning parts that are susceptible to ESD. You can purchase antistatic bags locally or they are available for ordering in the sizes shown below:

Part Number	**Size (inches)**	
24193	Bag Static Shielding	3 x 5
24195	Bag Static Shielding	4 x 6
24197	Bag Static Shielding	5 x 8
24202	Bag Static Shielding	8 x 12
24203	Bag Static Shielding	10 x 12
24206	Bag Static Shielding	12 x 16
24207	Bag Static Shielding	12 x 18
25155	Bag Static Shielding	18 x 18
60431	Bag Pink Antistatic Zip	18 x 24
64655	Bag Bubble Antistatic Seal	6 x 8.5
64656	Bag Bubble Antistatic Seal	8 x 11.5

Order only the bag sizes you need for returning circuit boards and items that are susceptible to static damage.

Note - *It only takes a static charge of 30 volts to destroy some components.*

CARL ZEISS MEDITEC

SERVICE BULLETIN

Instrument:	**General**	No.:	**GEN-007C**
Subject:	**Calibration Certificate for Test Equipment**	Date:	**11 Jul 05**
Status:	**Informational**	Pages:	**1**

Obsolete

11 April 2008

Bulletin GEN-007C is now obsolete, due to the reason indicated below:

- ☐ No longer valid
- ☐ No longer necessary
- ☐ Information incorporated into new service manual release
- ☑ Information incorporated into bulletin number GEN-002G

CARL ZEISS MEDITEC

SERVICE BULLETIN

Instrument:	**General**	No.:	**GEN-008A**
Subject:	**Bloodborne Pathogens**	Date:	**17 Aug 98**
Status:	**Informational**	Pages:	**1**

This bulletin replaces Service Bulletin GEN-008.

Bloodborne Pathogens - Pathogenic microorganisms that are present in human blood can cause disease in humans. These pathogens include, but are not limited to, Hepatitis B virus (HBV) and Human Immunodeficiency Virus (HIV). The Center for Disease Control (CDC) states that the Hepatitis B virus (HBV) can survive for several weeks (or months) in dried blood on environmental surfaces or contaminated needles and instruments.

Pathogenic microorganisms require a direct route into the body for them to cause disease in humans. A direct route can be considered a break in the skin, such as a cut, a burn, a rash, or through acne. Certain openings in the body, such as the eyes, can also be considered a direct route.

Precautions - Employees should take an approach that assumes all blood and body fluids encountered in the workplace are potentially infected with Human Immunodeficiency Virus (HIV) or Hepatitis B Virus (HBV), or other bloodborne pathogens.

Personal Protective Equipment - Disposable **LATEX** gloves are available to all employees who anticipate having hand contact with blood, other potentially infectious materials, mucous membranes, and non-intact skin; and when handling or touching contaminated or potentially contaminated items, materials, or equipment. The disposable gloves shall not be washed or decontaminated for re-use.

Disposable LATEX Glove	Quantity 1	P/N 34121

The part number reflects a quantity of one glove, so be sure to order in pairs.

If you wish to order one box containing 100 gloves, order a quantity of 100 using the above part number.

CARL ZEISS MEDITEC

SERVICE BULLETIN

Instrument:	**General**	No.:	**GEN-009J**
Subject:	**List of Manuals**	Date:	**29 Apr 08**
Status:	**Informational**	Pages:	**7**

This bulletin replaces Service Bulletin GEN-009I

The attached List of Manuals is to be used as a reference to ensure that manuals in your possession are at the latest revision or latest release date.

This list will be updated periodically to include new manuals and manual revision changes. Meanwhile, we recommend that you manually indicate in the list each new manual that you receive.

Notes -

1. *Manuals issued or amended since the last revision of this list are marked by an asterisk (*).*

2. *Manuals that are no longer available to order have a line through the part number (~~02209~~).*

OWNER'S / USER'S MANUALS:

	Title	P/N	Revision / Date
	Vision Analyzer	~~02209~~	July 17, 1980
	Lens Analyzer 310	~~04570~~	1978
	Lens Analyzer 316	~~05850~~	Rev C
	Lens Analyzer 305, 322	~~05775~~	May 10, 1985
	Lens Analyzer 306, 330, 340	03290	Rev D - May, 1990
	Lens Analyzer 350, 360, 370, 380	28929	Rev B
	Lens Analyzer 355	46508	Rev A
	Auto Refractor 510	~~07490~~	March, 1983
	Auto Refractor 520	~~07871~~	April, 1984
*	Auto Refractor 500, 515, 530	~~14540~~	May, 1986
	Auto Refractor 525, 540	~~14800~~	December, 1987
	Auto Refractor 550, 560, 570	~~23090~~	October, 1988
*	Auto Refractor 580, 585, 595	~~23330~~	Rev D
	Auto Refractor 597, 597K, 598, 599	35265-1	Rev E - April, 1996
	Auto Refractor 5000 / 5010 / 5015	50648	Rev A
	Visante	60899-1	Rev A – January, 2006
	Acuitus	50648	Rev A – June, 2001
	Auto Keratometer 410	~~06615~~	Rev D - June, 1986
*	Auto Keratometer 420	~~19003~~	Rev B - May, 1990
	Autofit	~~06672~~	Rev D
	Autofit	~~19028~~	Rev A - April, 1987
	FDT Visual Field Instrument	112098-1	Rev D - 2000
	FDT Primer	112100	Rev B - December, 1998
	Matrix Visual Field Instrument User's Guide	112738	Rev A - April, 2003
	Matrix Clinical Examples	112739	Rev A
	Field Analyzer	14240	Rev H - 1993
	Field Analyzer - HFA II	47653-1	Rev A - October, 1998
	Field Analyzer - HFA II - i	51680-1	Rev B
	Field Analyzer - HFA II - i	57558-1	Rev B
	Glaucoma Progression Analysis (GPA) Addendum	56167-1	Rev A - October, 2003
	Statpac for Windows	~~46698~~	Rev A - September, 1997
	HFA II 14.0 & HFA II-i 4.0 Manual Addendum GPA and SITA Swap	58484-1	Rev B – 9/2005
	Ultrasonic Biometer 810	~~03679~~	August, 1985
	Ultrasonic Biometer 820	~~16180~~	Rev H - October, 1996
*	Ultrasonic Pachometer 850	~~03680~~	Rev B - January, 1991
	Ultrasonic Pachometer 855	~~16783~~	Rev A - July, 1994
	AB Scan 835	~~20850~~	Rev C - July, 1992
*	AB Scan 837	~~33709~~	Rev A - February, 1996
	UBM 840	33501	Rev B
	GDxVCC Rev 5.5 User Manual	58655-1	Rev A – May, 2005
	VISUCAM lite	Z0000001334310	N/A
	VISUCAM C	~~Z0000001253546~~	7/2003
	VISUPAC	~~Z0000001355474~~	N/A
	VISUPAC H/W User Manual	Z0000001400635	N/A

	Title	P/N	Date
	OCT1 (Windows 3.11 Platform)	~~38904~~	Rev B - February, 1998
	OCT1 Revision A.5 Supplement	~~48489~~	Rev A - April, 1999
	OCT1 (Windows 98 Platform)	~~53822-1~~	Rev A - July, 2002
	OCT2 Model 2010 User Manual	51390-2	Rev A - May, 2001
	Stratus OCT Model 3000 User Manual, 4.0.x	56641-1	Rev A - April, 2004
	Stratus OCT Model 3000 User Manual, 5.0.x	59235-1	Rev A – Nov, 2007
*	Cirrus HD-OCT Model 4000 User Manual	62701-1	Rev C – Sept, 2007
	Corneal Topographer 991, 992, 993, 995	48113-1	Rev C
	Corneal Topographer 990	40602	Rev C
*	Corneal Topographer Model 9000	62623-1	Rev A - July, 2007
*	PreView PHP User Guide	~~DN600D001~~	Rev A2 – Oct, 2005

SERVICE MANUALS:

	Title	P/N	Revision / Date
	Vision Analyzer	~~02561~~	Rev C
	Lens Analyzer 322, 324, 316	~~04890~~	Rev C
	Lens Analyzer 306, 330, 340, 344	15075	Rev C - September, 1993
*	Lens Analyzer 350, 360, 370, 380	28394	Rev C – March, 2006
	Auto Refractor 510, 520	~~07648~~	Rev C
	Auto Refractor 525, 540, 550, 560, 570	~~23150~~	Rev B - July, 1991
*	Auto Refractor - HARK Series	36307	Rev D - September, 2006
	Auto Refractor - Acuitus	47881	Rev C - April, 2000
	Auto Keratometer 410, 420	~~19050~~	Rev A - March, 1992
	Corneal Topography System - ATLAS 990	43130	Rev A - June, 1996
	Corneal Topography Systems - 991/992/993/995	47333	Rev B - January, 2006
	FDT Visual Field Instrument	112120	Rev B - October, 1997
	Humphrey Matrix Visual Field Instrument	112761	Rev B - December, 2003
	Field Analyzer - HFA I - Book I	~~08006~~	Rev A - April, 1995
	Field Analyzer - HFA I - Book II	~~08006~~	Rev A - April, 1995
	Field Analyzer - HFA II (only available on CD)	30122-CD	Rev B - December, 2001
*	Field Analyzer - HFA II i	52235	Rev C - November, 2005
	Ultrasonic Biometer 810	~~16424~~	Rev A - July, 1986
*	Ultrasonic Biometer 820	~~16444~~	Rev D - December, 1995
*	Ultrasonic Pachometer 850	~~16425~~	Rev A - July, 1986
*	AB Scan 835	~~20836~~	Rev C - January, 1992
*	AB Scan 837	~~25189~~	Rev A - February, 1996
*	UBM 840	~~33531~~	Rev C - October, 1993
	GDxVCC / Access	59563	Rev A – June, 2005
	Visante OCT	56962	Rev A – October, 2005
*	Cirrus HD-OCT Model 4000	62678	Rev C – September, 2007
*	Atlas Model 9000	63041	Rev A – February, 2008

Title	P/N	Date
Optical Coherence Tomography Scanner - OCT 2000	38898	Rev B - August, 1998
Optical Coherence Tomography Scanner - OCT 2010	51233	Rev C - October, 2001
Optical Coherence Tomography Scanner - OCT 3000	52785	Rev C - November 2003
* PreView PHP	~~DN600D006~~	Rev A01 - 2003

ZEISS SERVICE MANUALS:

Title	P/N	Date
SLIT LAMP 10SL	ZSM301731	9/76
SLIT LAMP 10SL/O	~~ZSM304002~~	9/80
SLIT LAMP 20SL	~~ZSM304003~~	6/91
SLIT LAMP 30SL/M	ZSM304004	12/91
SLIT LAMP PHOTO 40SL/P	~~ZSM304005~~	6/90
SLIT LAMP 75SL SUBSEQUENT VERSION	~~ZSM304006~~	6/83
SLIT LAMP 100/16	~~ZSM304100~~	11/71
SLIT LAMP 120	ZSM304027	5/98
SLIT LAMP 125/16	~~ZSM304125~~	7/89
SLIT LAMP 130	ZSM304031	6/96
SLIT LAMP PHOTO	~~ZSM304016~~	3/87
HAND SLIT LAMP HSO-10	ZSM304000	12/91
INDIRECT OPHTHALMOSCOPE	ZSM304026A1	8/93
OPHTHALMOMETER W/BULB	~~ZSM304126~~	12/77
POWER SUPPLIES - 309673/392575/309605	~~ZSM304128~~	12/79
SLIT FLASH ATTACHMENT SP30	~~ZSM304017~~	1/88
SLIT LAMP 115 CLASSIC	ZSM304038	10/99
FUNDUS CAMERA FK30	~~ZSM304018~~	1/84
FUNDUS CAMERA FF4	~~ZSM304020~~	7/86
FUNDUS CAMERA FF5	~~ZSM304021~~	1/91
FUNDUS CAMERA FF450	ZSM304028	3/01
FUNDUS CAMERA FF450+	ZM304042	9/2003
FUNDUS FLASH3-C\RTS	~~ZSG309033/79~~	3/79
POWER SUPPLIES - MED	~~ZSM304127~~	6/80
SBG 720-2 FLASH GENERATOR	~~ZSM304023~~	2/86
SBG 720	~~ZSM304720~~	5/77
LASER YAG (USE ~~ZSM306009~~)	~~ZSM306000~~	N/A
LASER YAG E (USE ~~ZSM306009~~)	~~ZSM306002~~	N/A
LASER YAG II	ZSM306012	5/93
LASER YAG FL (USE ~~ZSM306009~~)	~~ZSM3068529901~~	N/A
LASER ARGON (USE ~~ZSM306009~~)	~~ZSM306001~~	N/A
LASER ARGON II	ZSM306008	3/93
LASER YAG E/FL & ARGON I	~~ZSM306009~~	1/92
LASER YAG II DESCRIPTION OF SERVICE PROGRAM	~~ZSM306012A6~~	4/6/94
LASER VISULAS DIODE	~~ZSM306010~~	1/93
LASER VISULAS DIODE II	~~ZSM306015~~	1/93
LASER DIODE II DESCRIPTION OF SERVICE PROGRAM	~~ZSM306015A3~~	5/6/94
LASER VISULAS YAG II PLUS	ZSM306016E	8/98
LASER VISULAS YAG III	ZSM306022	6/04

Title	P/N	Date
LASER PDT 690s	ZSM306018	4/99
LASER PDT/U 690s	ZSM306020	11/02
LASER VISULAS 532	ZSM306017E	9/02
LASER VISULAS 532s	ZSM306021	7/02
ACCESSORIES #1	~~ZSM308000~~	6/93
ACCESSORIES #2	~~ZSM308001~~	11/89
INSTRUMENT BASE	~~ZSM304009~~	2/92
INSTRUMENT MOUNTING (TABLES)	~~ZSM304011~~	12/84
LA 110 LENS ANALYZER	~~ZSM264002~~	4/93
MECHANICAL, ELECTRICAL P/N'S	~~ZSM308004~~	8/92
MEDILIVE VIDEO CAMERA	~~ZSM308007~~	12/93
MICROSCOPE ATTACHMENTS	~~ZSM304008~~	9/89
POLAROID CB71	~~ZSM304022~~	5/84
IOL MASTER (1-3)	Z0000001075939	8/01
IOL MASTER XP (4)	ZSM304047	May, 2005
POWER SUPPLY UNITS	~~ZSM308002~~	10/88
RCL	~~ZSM304012~~	7/82
RCL2 - SYSTEM	~~ZSM304013~~	3/85
REFRACTOMETER 140	~~ZSM304014~~	10/83
VISUCAM lite	ZSM304044	10/03
VISUCAM C	~~ZSM304045~~	9/03
VISUPAC 120/130	~~ZSM304040~~	N/A
VISUCAM PRO NM	ZSM304048	11/2005

ZEISS ALIGNMENT PROCEDURES:

Title	P/N	Date
ALIGNMENT PROCEDURE 10SL	~~ZSM301731JA~~	2/92
ALIGNMENT PROCEDURE 20SL	~~ZSM304003JA~~	4/92
ALIGNMENT PROCEDURE 30SL/M	~~ZSM304004JA~~	4/92
ALIGNMENT PROCEDURE 40SL/P	~~ZSM304005JA~~	4/92
ALIGNMENT PROCEDURE PHOTO SL, 100/16, 125/16	~~ZSM304016JA~~	4/92
ALIGNMENT PROCEDURE FK30	~~ZSM304018JA~~	2/92
ALIGNMENT PROCEDURE FF4	~~ZSM304020JA~~	4/92
ALIGNMENT PROCEDURE FF5	~~ZSM304021JA~~	4/92

ZEISS OPERATING INSTRUCTIONS:

Title	P/N	Date
SLIT LAMP 10SL	~~ZG30112~~	N/A
SLIT LAMP 20SL	ZG301105	9/89
SLIT LAMP 30SL/M	~~ZG30114~~	N/A
SLIT LAMP PHOTO 40SL/P	ZG301072	1/88
SLIT LAMP 100/16 & 125/16	~~ZG301111~~	N/A
SLIT LAMP 120	Z0000001158278	N/A
SLIT LAMP 130	Z0000001158280	N/A
HAND SLIT LAMP HSO-10	~~Z3010617044201~~	11/98
INDIRECT OPHTHALMOSCOPE	~~ZG301030~~	N/A
SLIT LAMP PHOTO 40SL/P SUPPLEMENT	~~ZGE1072~~	5/89
SLIT LAMP 115 CLASSIC	Z0000001159538	N/A
APPLANATION TONOMETER FOR 10SL–30SL/M	ZG30163	N/A

Title	P/N	Date
CORNEAL PACHYMETER & ANTERIOR CHAMBER DEPTH MEASURING DEVICE FOR 30SL/M	~~ZG301023~~	N/A
CORNEAL PACHYMETER FOR 100/16	~~ZG301000~~	N/A
DIAGNOSTIC SET H	~~ZG301008~~	1/83
HAND SLIT LAMP HSO-10 SUPPLEMENT	~~ZGE30138~~	N/A
INDIRECT OPHTHALMOSCOPE SUPPLEMENT	~~ZGE301030~~	1/88
KERATOMETER	~~ZG30191~~	1/82
KERATOMETER 10SL/O	ZG30165	8/80
KERATOMETER ATTACHMENT FOR SLIT LAMP 30SL/M	~~ZG30192~~	4/82
KERATOMETER ON TABLE STAND	~~ZG30169~~	1/82
POWER SUPPLY UNIT Z309673-9901	~~ZG301016~~	11/27/91
MECHANICAL MICROMANIPULATOR 20SL	~~ZG301167~~	11/16/92
MICROSCOPE ATTACHMENT 8X FOR SL	~~ZG30117~~	4/81
OPHTHALMOMETER	~~ZG30162~~	10/82
SAFETY NOTES 30SL/M	~~ZG301164E~~	1/9/92
SLIT FLASH ATTACHMENT SP30 FOR SLIT LAMP 30SL/M	~~ZG301062~~	N/A
SPECIAL EYEPIECE FOR LENGTH & ANGLE MEASUREMENT W/ SL	~~ZG3011303~~	N/A
8X MICROSCOPE ATTACHMENT FOR PHOTO 40SL/P	~~ZG301082~~	8/88
FUNDUS CAMERA FK30	~~ZG301009~~	N/A
FUNDUS CAMERA FF4 BRIEF INSTRUCTIONS	~~ZG301056~~	N/A
FUNDUS CAMERA FF5	~~ZG301116~~	10/90
FUNDUS CAMERA FF5 SUPPLEMENT	~~ZGE301116~~	6/16/92
FUNDUS CAMERA	~~ZG30245~~	8/85
FUNDUS CAMERA, FF450Plus USER'S MANUAL	Z0000001363321	N/A
AUTO CONTROL EQUIPMENT FOR FUNDUS CAMERA	~~ZG30246~~	6/85
DATAPHOT II	~~ZG301087~~	4/91
SBG 720-2 FLASH GENERATOR	~~ZG301051~~	N/A
35MM PHOTOGRAPHY W/ OPERATION MICROSCOPE - BRIEF INSTRUCTIONS	~~ZGK301079~~	N/A
LASER VISULAS YAG	~~ZG301040~~	N/A
LASER VISULAS YAG E	~~ZG301097~~	N/A
LASER VISUALS YAG E	~~ZG301058~~	N/A
LASER VISULAS YAG FL	~~ZG301093~~	4/89
LASER VISULAS YAG II	ZG301170E	01/13/94
LASER VISULAS ARGON	~~ZG301067~~	N/A
LASER VISULAS YAG II PLUS	Z0000001159543	9/98
LASER VISULAS 532	Z0000001159980	6/98
LASER VISULAS 532 Combi	Z0000001159971	N/A
LIO 532 Laser Indirect Opthalmoscope	Z0000001159980	6/98
LASER VISULAS 532s	Z0000001159546	12/02
LASER VISULAS 532s Combi	Z0000001183331	3/02
LASER PDT 690S	Z0000001024247	7/00
PDT/U	Z0000001126624	12/00

Title	P/N	Date
LASER VISULAS ARGON II	~~ZG301132~~	12/1/93
LASER VISULAS ARGON INDIRECT OPHTHALMOSCOPE	~~ZG301159E~~	12/3/93
LASER VISULAS ARGON/YAG	~~ZG301070~~	8/88
LASER VISULAS COMBI II	ZG301191	9/4/93
VISULAS DIODE II	~~ZG301200~~	N/A
LASER OPMILAS YAG M	~~ZG301106~~	10/31/91
LASER VISULAS YAG SAFETY USER CHECKLIST	~~ZGE301040~~	N/A
LASER VISULAS YAG E SAFETY USER CHECKLIST	~~ZGE301058~~	N/A
LASER VISULAS YAG FL SUPPLEMENT	~~ZGE301093~~	9/89
ASYMMETRIC INSTRUMENT TABLE	~~ZG301198~~	9/30/93
DIAGNOSTIC SET	~~ZG30131~~	N/A
GOLDMAN APPLANATION TONOMETER MOUNTING INSTRUCTIONS	~~ZM30111016~~	N/A
INSTRUMENT SAFETY DETACHABLE CONNECTIONS - SUPPLEMENT TO THE OPERATING MANUALS	~~ZGE301108~~	12/93
IT 300 M INSTRUMENT TABLE	~~ZG60820400223~~	3/93
LAMP PART NUMBERS	~~ZG308100~~	8/89
LA 110 LENS ANALYZER	~~ZG2660505500223~~	4/13/93
STEREO PHOTO ADAPTER	~~ZG309021/76~~	N/A
IOL Master	Z0000001150839	10/2002
IOL Master XP 4.01 (Zeiss)	Z0000001371524	8/24/2005
Visucam Pro NM (Zeiss)	Z0000001354856	9/9/2005

CARL ZEISS MEDITEC

SERVICE BULLETIN

Instrument:	**General**	No.:	**GEN-010D**
Subject:	**General Disclaimer Form**	Date:	**13 Apr 07**
Status:	**Informational**	Pages:	**2**

This bulletin replaces Service Bulletin GEN-010C

The General Disclaimer Form is to be used on instruments that currently require that a disclaimer form be filled out (refer to SOG-006x). This General Disclaimer form will replace existing disclaimer forms that were tailored to the individual instruments.

The General Disclaimer form must be signed by the customer prior to any service actions performed. Upon completion of service activity, this form must be sent in (via Prevail) along with the completed System Operation Validation form and the Field Service Report (FSR).

CARL ZEISS MEDITEC SERVICE DISCLAIMER

OWNER: _____ DATE: _____

LOCATION: _____ SOFTWARE REV.: _____

INSTRUMENT MODEL: _____ INSTRUMENT SERIAL NO.: _____

At your request, Carl Zeiss Meditec has agreed to service the instrument described above. The possibility exists that during the course of servicing, customer data that has previously been entered onto a hard disk (or onto another media whether internal of external) may be erased or otherwise adversely affected. Carl Zeiss Meditec cannot guarantee that the customer data will not be lost or altered and has no obligation or responsibility to reconstruct the customer data which may have to be restored back onto a hard disk (or onto another media whether internal or external) for any reason.
If a hard disk (or another media whether internal or external) that was purchased through Carl Zeiss Meditec, Inc. or came with your instrument has to be replaced or erased / reformatted, it will be restored to its original factory configuration. Customer data will need to be restored back onto the hard disk (or onto another media whether internal or external) by the customer.

WARNING:

1. ***For Hard Disks - It is the customer's responsibility to archive / backup their database files before service is performed on their equipment.***
2. ***For Networked Instruments / Modalities – As a result of the requested service, Customer acknowledges that there is potential risk of damage to computer hardware, network devices, peripherals, accessories, data storage servers, data storage media, or other hardware not cited. Customer also acknowledges potential risk of damage to, and corruption or loss of computer software, applications, and data.***
3. ***For other media whether internal or external - It is the customer's responsibility to maintain a copy of their programmed settings in case the programmed settings become corrupted and irretrievable.***

Note – *Carl Zeiss Meditec, Inc. is obligated to strictly follow the regulations under the Health Insurance Portability and Accountability Act (HIPAA).*

Please sign below to indicate that you have read this disclaimer, agree to be bound by it, and have authorized the Carl Zeiss Meditec Field Support Engineer to provide the requested service.

ACCEPTED AND AGREED TO:

_____
Signature

_____
Name (printed)

_____
Date

_____
Title (Officer or authorized representative)

CARL ZEISS MEDITEC FIELD SUPPORT ENGINEER:

_____
Signature

_____
Name (printed)

_____
Date

_____
Service Call Number

ZEISS CARL ZEISS MEDITEC

CARL ZEISS MEDITEC

SERVICE BULLETIN

Instrument:	**General**	No.:	**GEN-011E**
Subject:	**Release of Service Manuals / Field Service Guides on Disk (CD)**	Date:	**29 Apr 08**
Status:	**Informational**	Pages:	**1**

This bulletin replaces Service Bulletin GEN-011D

The following Carl Zeiss Meditec Service Manuals / Field Service Guides are available on individual CDs:

Service Manual	Part Number	Revision
Auto Refractor – HARK Series	36307-CD	Rev D
Auto Refractor – Acuitus	47881-CD	Rev C
Cirrus HD-OCT Model 4000	64492	Rev C
ATLAS (HCT2) Model 991-995	47333-CD	Rev B
ATLAS (CTS2) Model 9000	66728	Rev A
Field Analyzer – HFA2	30122-CD	Rev B
Field Analyzer – HFA2-i	52235-CD	Rev C
Lens Analyzer Model 350 – 380	28394-CD	Rev C
Stratus / OCT3 Model 3000	52785-CD	Rev C
GDxVCC / Access	59563-CD	Rev A
Visante OCT (AC-OCT)	56962-CD	Rev A

Each CD will include the entire Service Manual / Field Service Guide, and all GEN and Product Service Bulletins released at the time of the CD duplication.

The Service Manual / Field Service Guide CDs are available from Carl Zeiss Meditec through your normal parts order process.

Distribution of New or Revised Service Manuals / Field Service Guides

Distribution of ***New or Revised*** Service Manuals / Field Service Guides will be done selectively, as follows:

U.S. Domestic Field Service

All Domestic Field Support Engineers can access Service Manuals / Field Service Guides through Lotus Notes.

International Service

All International Support personnel can access Service Manuals / Field Service Guides through the Extranet.

CARL ZEISS MEDITEC

SERVICE BULLETIN

Instrument:	**Humphrey Field Analyzer II - i**	No.:	**FA2i-ID05**
Subject:	**Service Bulletin Index**	Date:	**28 Apr 08**
Status:	**Informational**	Pages:	**4**

This bulletin replaces Service Bulletin FA2i-ID04

This bulletin indexes all HFA II - i and GEN service bulletins issued to date.

The bulletins are indexed both by number and by instrument subassembly.

The index will be updated periodically to include new bulletins. Meanwhile, we recommend that you manually list in the index each new bulletin you receive.

Note – *Bulletins issued since the last revision of this index are marked by an asterisk (*).*

INDEX BY NUMBER

INDEX BY SUBASSEMBLY

MOTOR DRIVER BOARD

*	FA2i-036	New Motor Driver Board P/N 61190
*	FA2i-042A	New Motor Driver Board

NETWORKING

*	FA2i-032	Networking and Networking Diagnostic Tools

PARTS

*	FA2i-033	Recommended Spare Parts List

POWER SUPPLY

	FA2i-018	Power Supply FET Failure
*	FA2i-028A	New Power Supply Released
*	FA2i-030A	12 Volt Regulator Assy
*	FA2i-044A	Power Supply P/N F57974

PRINTER

	FA2I-013A	Printrex Printer with New Universal Power Supply
*	FA2i-016F	Compatible External Printers List

PROJECTION SYSTEM

	FA2i-014	Correction of Focus Motor Errors
	FA2i-020	Change in Carriage Bearing Assembly
*	FA2i-024A	Stepper Motor Errors
*	FA2i-046	New Edge Detectors for Projection Assembly

SOFTWARE

*	FA2i-005J	Software Timeline / Features / Changes
	FA2i-015	File/Name Notice
	FA2i-022	Startup Problems (v 3.4 SW)
*	FA2i-031A	Calibration Changes with Revision 4.1 or Greater Software
*	FA2i-043	Version 4.2 Application Software Release

SYSTEM DRIVES

*	FA2i-003I	Information on the current Floppy Disk, Hard Disk, and Magnetic Optical Drives

Humphrey Systems

SERVICE BULLETIN

Instrument:	**Humphrey Field Analyzer II - i**	No.:	**FA2i-001**
Subject:	**HFA II - i Service Manual, P/N 52235, Rev A Release**	Date:	**16 Jul 01**
Status:	**Informational**	Pages:	**1**

Revision A of the Humphrey Field Analyzer II - i Service Manual is now available.

Distribution of the new manual is being done selectively, as follows:

U.S. Domestic Field Service

- Each Regional Field Service Manager and each Service Representative recorded as HFA II -trained will receive a copy of the HFA II - i Service Manual along with this bulletin.
- All other individuals on the bulletin distribution will receive this bulletin only.

Any U.S. Domestic Service Representative ***who is HFA II-trained*** and fails to receive the new manual with this bulletin should contact the Humphrey Service Department Administrative Assistant (Gina Giuliano).

International Operations

- A copy of the HFA II - i Service Manual will accompany this bulletin to each person officially designated as the service contact for each area of international operations.

Any International Service Rep ***who is HFA II-trained*** and does not receive the new manual with this bulletin should contact the person responsible for their area of international operations.

Additional copies of the HFA II - i Service Manual are available by standard parts order.

Item: . . . HFA II - i Service Manual

P/N: . . . 52235

Humphrey Systems

SERVICE BULLETIN

Instrument:	**Humphrey Field Analyzer II - i**	No.:	**FA2i-002**
Subject:	**Differences between HFA II and HFA II - i**	Date:	**15 Jul 01**
Status:	**Informational**	Pages:	**1**

This service bulletin will summarize some of the major differences between the HFA II system and the HFA II - i system. If you are trained on the HFA II system, the similarities between the two models are close enough that additional classroom training is not required.

Computer	HFA II	HFA II - i
CPU	Motorola 68020 33 MHz	Intel Celeron 433 MHz
Hard Drive Controller	SCSI	IDE
Memory	4MB	64MB
Communications	3 Serial Ports	1 Serial Port, Network Port, 2 USB Ports (Future Use)

The CPU plugs into the Backplane PCB and is enclosed in an ESD enclosure. The Backplane PCB controls the Patient Switch, Touch Screen, Camera, Frame Grabber and Video.

Drive Module	HFA II	HFA II - i
Floppy	TEAC	Same drive with different jumper settings
Hard Drive	SCSI	IDE
Data Backup	Tape Drive	Magnetic Optical Drive

A new power supply is used, which has additional vcc power capacity. The HFA II and HFA II - i power supplies are not interchangeable. The HFA II - i uses a new Motor Driver Board, which is backward compatible to the HFA II. The back cover of the instrument has been re-designed to fit over the CPU enclosure and provides access to peripheral connectors.

Service Changes

All calibration procedures for the HFA II - i are identical to the HFA II. The HFA II - i saves all calibrations to the Hard Drive. The calibration file is also saved to a floppy disk and can be restored through the calibration menu. The back cover of the instrument provides a special storage slot for the calibration backup diskette.

The HFA II - i utilizes a new DST tool for changing the configuration of the instrument. Additionally, you may need to change BIOS settings for future upgrades to the system. The CPU diagnostics are no longer available; the Quick Tech 2000 Pro Tool will be used for HFA II - i CPU diagnostics.

CARL ZEISS MEDITEC

SERVICE BULLETIN

Instrument:	**Field Analyzer II - i**	No.:	**FA2i-003I**
Subject:	**Information on the Current Floppy Disk, Hard Disk and Magneto-Optical Drives**	Date:	**29 Jun 06**
Status:	**Informational**	Pages:	**10**

This bulletin replaces service bulletin FA2i-003H.

INDEX

Drive Strapping Guidelines

Floppy Drive	Hard Drive	MO Drive
Device 1 or PnP	Master or Master & Limit Drive Capacity	Slave

***NOTE:* Once the hard drive has been installed, the application (system) software, customer configuration data, the calibration files and customer data will need to be loaded onto the hard drive.**

Floppy Disk Drive (P/N 29244)

TEAC FD-235HF C5xx – 1.44Mb, 3½"

This floppy disk drive can be used on all models of the HFA II - i.

The TEAC floppy disk drive has a push button on the right-hand side of the drive and a green LED (rectangle) on the left-hand side of the drive. Pin #1 of the data connector is toward the center of the drive.

The jumpers should be placed as shown in Figure 1.

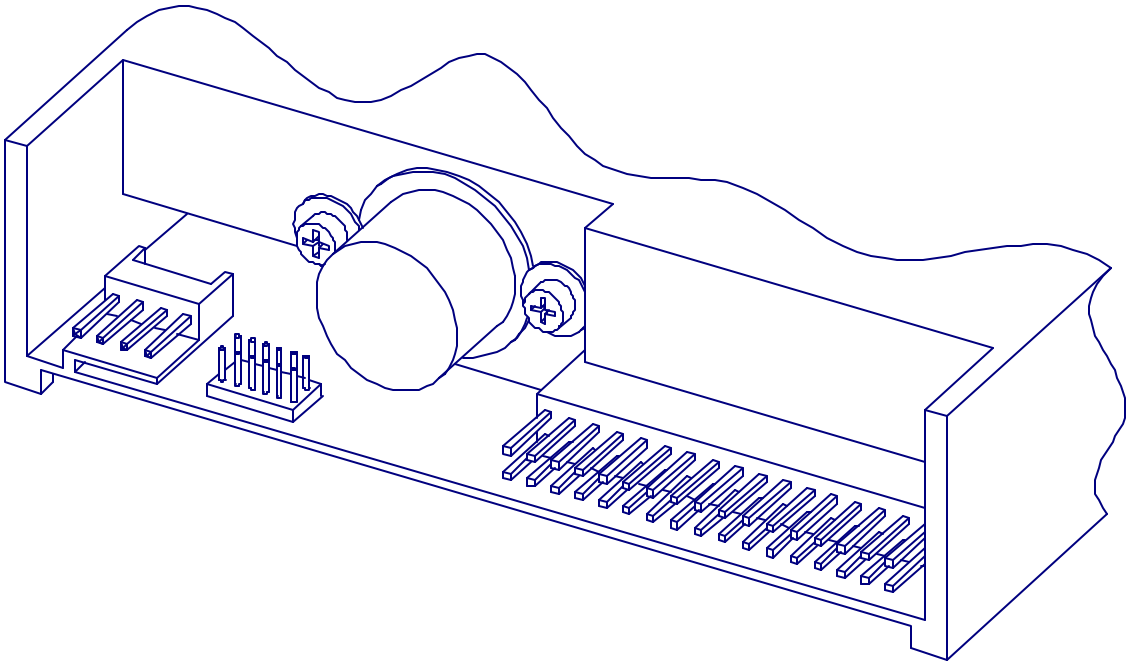

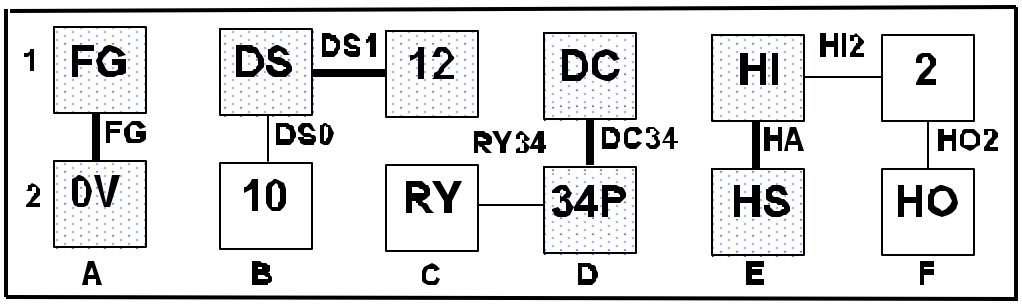

FIGURE 1. TEAC FD-235HF C5xx

Default settings are FG, DS1, DC34, HA

Floppy Disk Drive (P/N 53355)

Sony MPF920-1 - 1.44Mb, 3½”

This floppy drive can be used on all models of the HFA II-i.

The SONY floppy disk drive has a push button on the right-hand side of the drive and a green LED (rectangle) on the left-side of the drive. See Figure 2. The drive has a black face and is Plug & Play. As there are no jumper settings, this floppy drive cannot be used in the HFA I or the HFA II. Pin #1 of the data connector is toward the center of the drive.

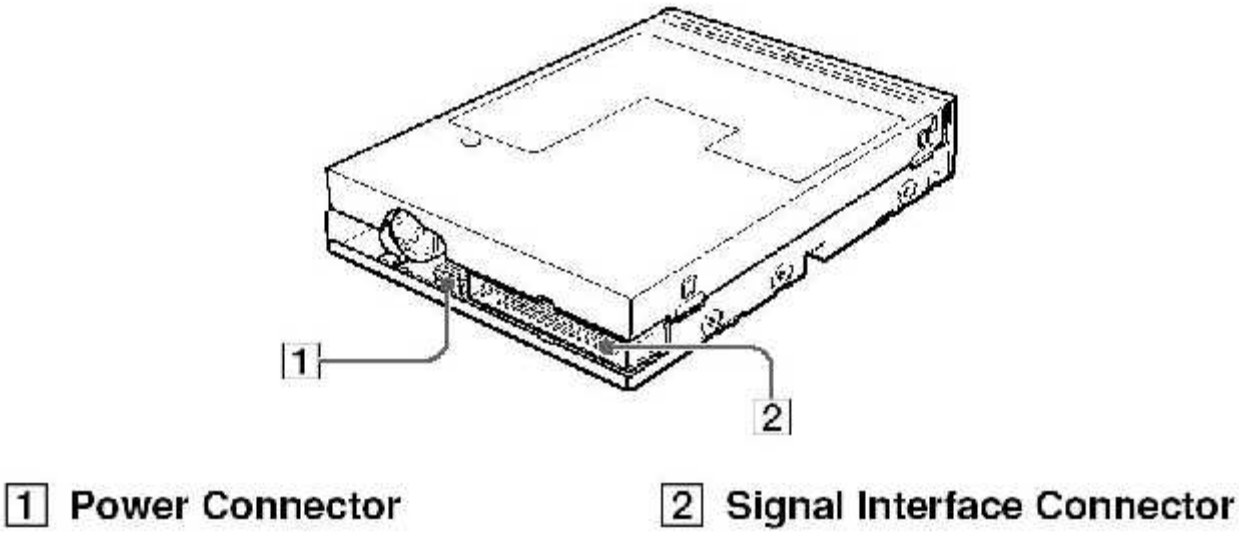

FIGURE 2. SONY MPF920-1

Floppy Disk Drive (P/N 29244)

TEAC FD-235HF 7529 – 1.44Mb, 3½"

This floppy disk drive can be used on all models of the HFA II - i.

The TEAC floppy disk drive has a push button on the right-hand side of the drive and a green LED (rectangle) on the left-hand side of the drive.

The terminating resistor pack RA1 is located behind data connector J1 and is soldered in place. The jumpers should be placed as shown in Figure 3. Pin #1 of the data connector is toward the center of the drive.

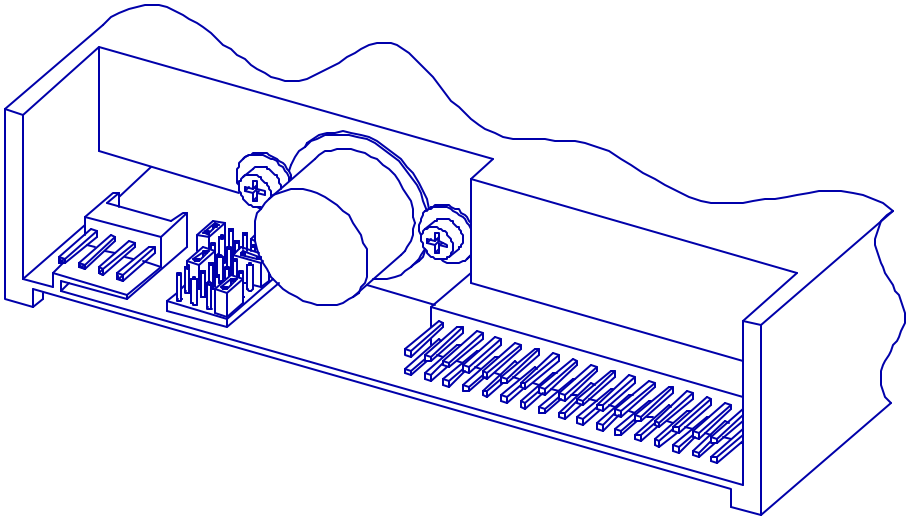

FG jumper may also be in a horizontal position.

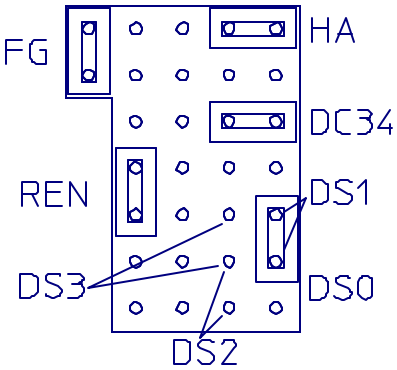

FIGURE 3. TEAC FD-235HF 7529

Seagate (ST3402111A) 40G, 3½", IDE

Hard Drive (P/N 58981-0)

The hard drive is strapped as the *Master or single drive* (see Figure 4) and the *"Limit drive capacity"* is set by the vendor. The first hard drive partition is formatted with FAT 16 to 2.1Gb. The second hard drive partition is formatted with FAT 32 to 30GB. The vendor will set the drive limit to 32GB and the drive will be labeled as 32GB Limited.

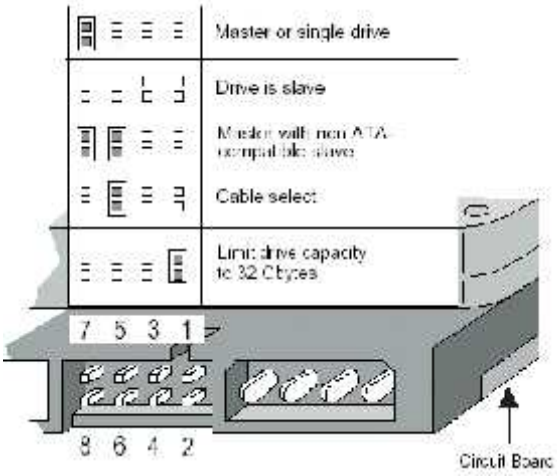

< The Limit drive capacity jumper is not used since the drive is limited by the vendor.

FIGURE 4. Seagate ST3402111A

Seagate (ST340015A) 40G, 3½", IDE

Hard Drive (P/N 58981-0)

The hard drive is strapped as the *Master or single drive* (see Figure 5) and the *"Limit drive capacity"* is set by the vendor. The first hard drive partition is formatted with FAT 16 to 2.1Gb. The second hard drive partition is formatted with FAT 32 to 30GB. The vendor will set the drive limit to 32GB and the drive will be labeled as 32GB Limited.

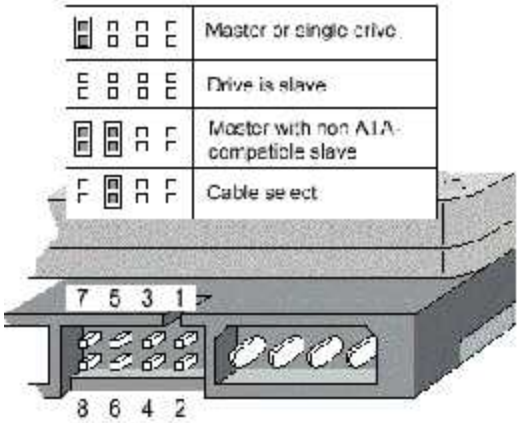

FIGURE 5. Seagate ST340015A

Seagate (ST340014A) 40G, 3½", IDE

Hard Drive (P/N 52036)

The hard drive is strapped as the *Master or single drive and Limit drive capacity*. The two jumpers should be set as illustrated in figure 6. The hard drive is formatted with FAT 16 to 2.1Gb.

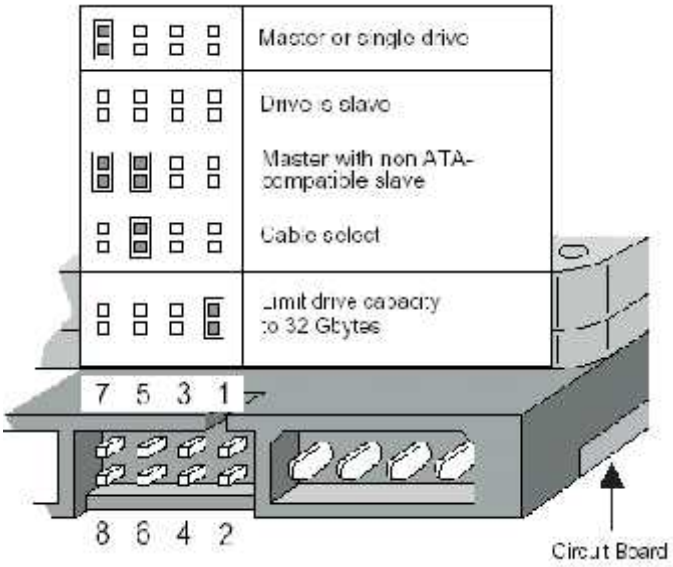

FIGURE 6. Seagate ST340014A

~~**Seagate (ST340015A) 40G, 3½", IDE**~~

Hard Drive (P/N ~~52036~~) Use P/N 58981-0

The hard drive is strapped as the *Master or single drive*. The jumper should be set as illustrated in figure 7. The hard drive is formatted with FAT 16 to 2.1Gb.

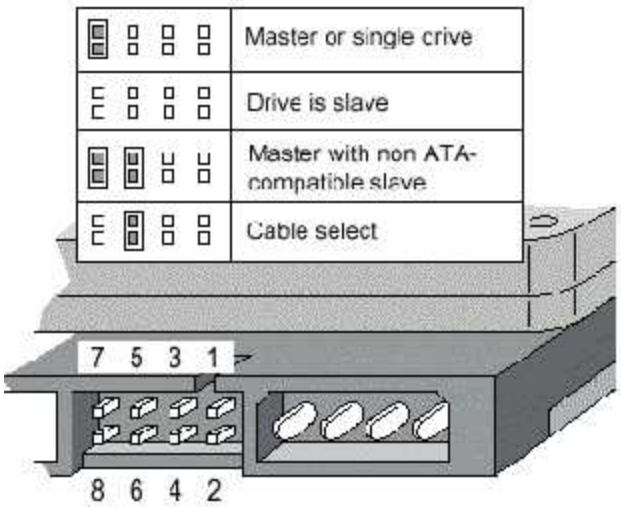

FIGURE 7. Seagate ST340015A

Western Digital (WD200EB) 20G, 3½", IDE

Hard Drive (P/N 52036)

The hard drive is strapped as the *Master or Single drive*. The jumper settings should be set as illustrated in figure 8. The hard drive is formatted with FAT 16 to 2.1Gb.

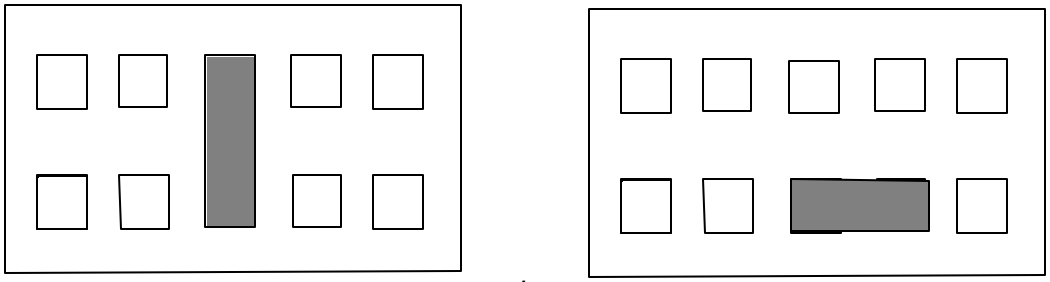

Ma st er
dri ve -
w/MO drive **Single drive - w/o MO drive**

FIGURE 8. Western Digital WD200EB

Seagate (ST340016A) 40G, 3½", IDE (Barracuda ATA IV)

Hard Drive (P/N 52036)

The hard drive is strapped as the *Master or single drive* and *Limit drive capacity*. The two jumpers should be set as illustrated in figure 9. The hard drive is formatted with FAT 16 to 2.1Gb.

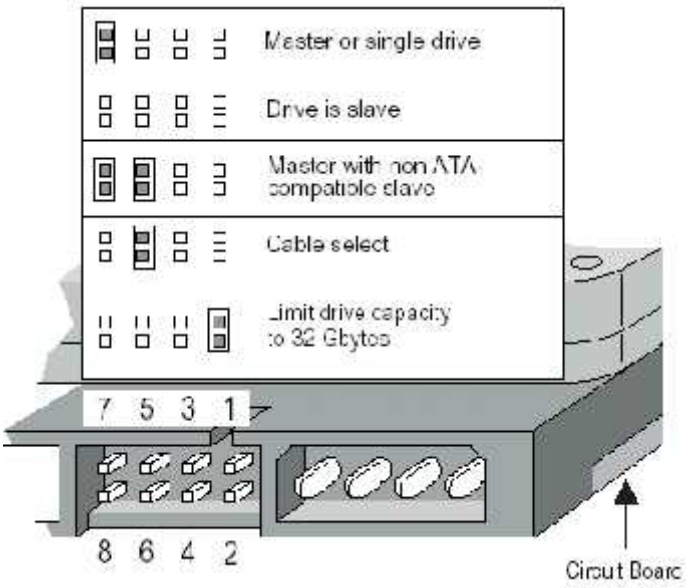

FIGURE 9. ST340016A

Seagate (ST320410A) 20G, 3½", IDE

Hard Drive (P/N 52036)

The hard drive is strapped as the *Master or single drive*. The jumper settings should be set as illustrated in figure 10. The hard drive is formatted with FAT 16 to 2.1Gb.

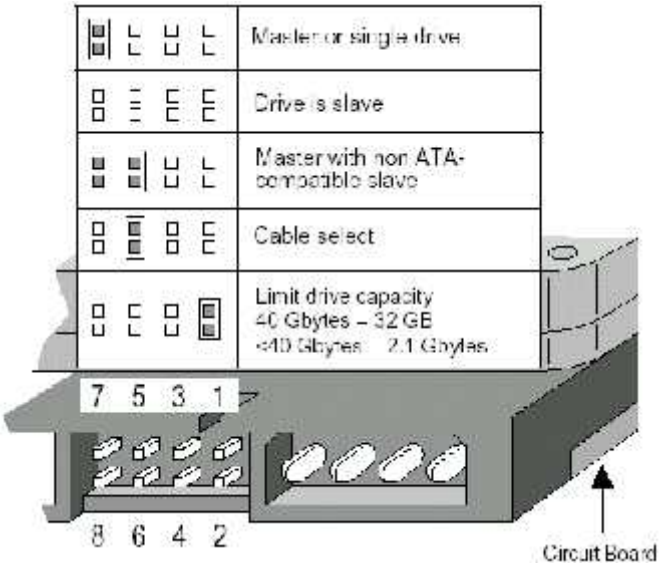

FIGURE 10. Seagate ST320410A

Seagate (ST320413A) 20G, 3½", IDE

Hard Drive (P/N 52036)

The hard drive is strapped as the *Master or single drive*. The jumper settings should be set as illustrated in figure 11. The hard drive is formatted with FAT 16 to 2.1Gb.

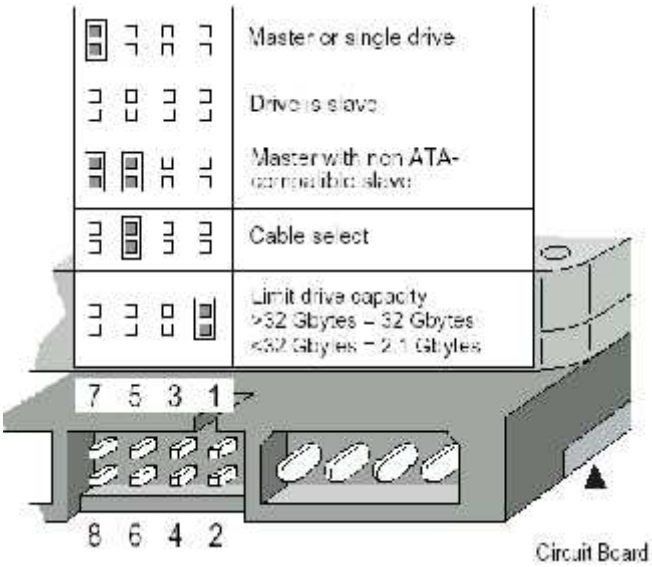

FIGURE 11. ST320413A

Magneto-Optical Drive (P/N 54568)

Fujitsu model MCM3064AP IDE 3.5" — Storage capacity 640MB (see Figure 12).

The Fujitsu magneto-optical drive is strapped as shown in Figure 13.

Mounting screws required — 4 ea. M3 x 6 — P/N 28293-6.

NOTE:* *Using longer screws may damage the MO drive.

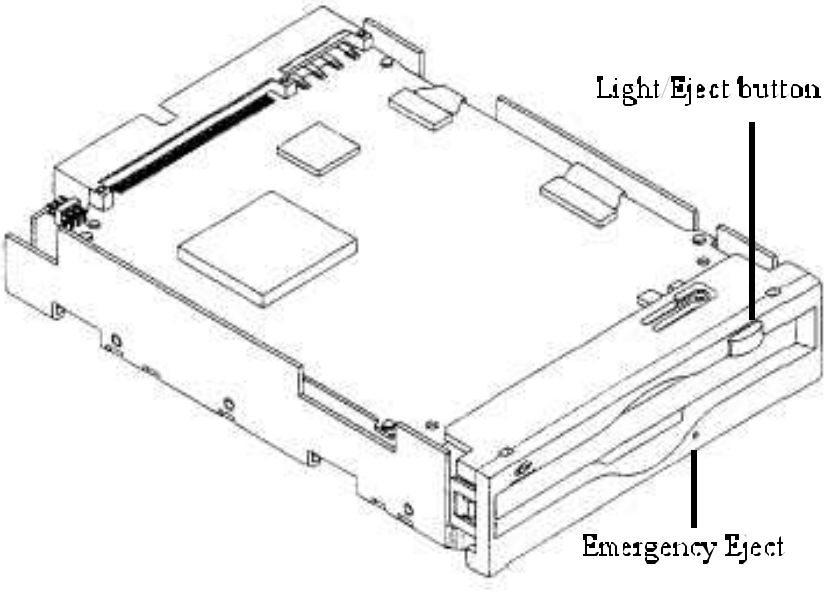

FIGURE 12. Fujitsu MCM3064AP IDE

Slave position.

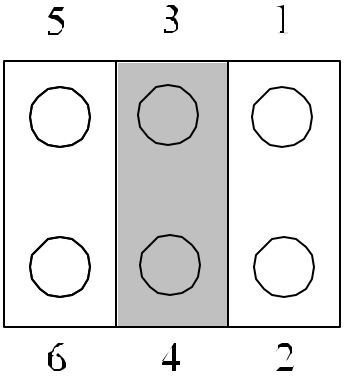

FIGURE 13. Magneto-Optical Drive Strapping

Magneto-Optical Drive (P/N 51476)

Fujitsu model MCF3064AP IDE 3.5" — Storage capacity 640MB (see Figure 14).

The Fujitsu magneto-optical drive is strapped as in figure 15.

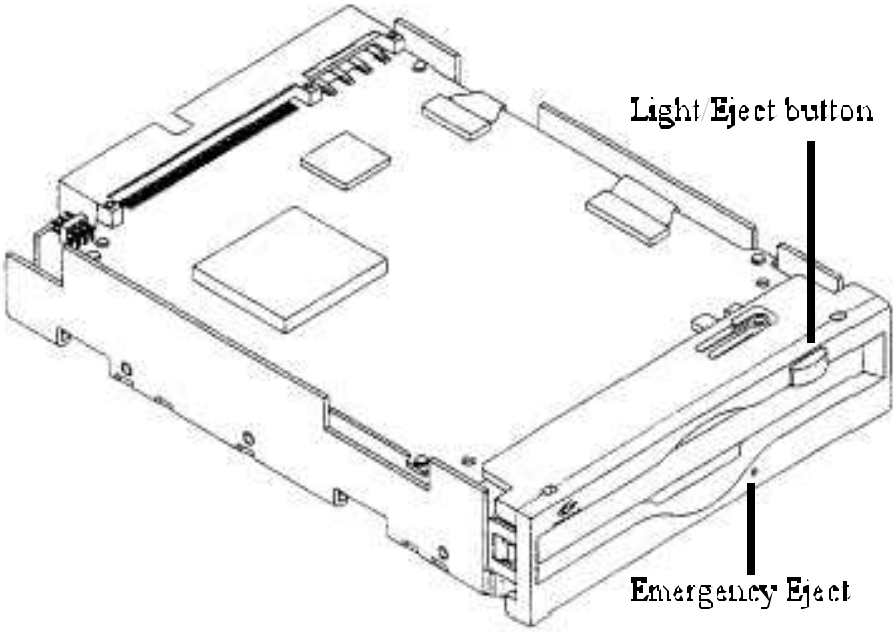

FIGURE 14. Fujitsu MCF3064AP IDE

Slave position.

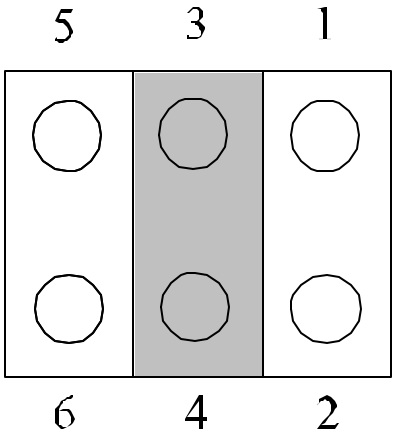

FIGURE 15. Magneto-Optical Drive Strapping

Humphrey Systems

SERVICE BULLETIN

Instrument:	**Humphrey Field Analyzer II - i**	No.:	**FA2i-004**
Subject:	**HFA II - i Serial Transfer Cables Released**	Date:	**27 Aug 01**
Status:	**Informational**	Pages:	**1**

Two new cables have been released for the HFA II - i serial data transfer.

General Information

One cable is required to transfer patient data between an HFA 1 (600 Series) instrument and an HFA II - i (700 Series) instrument. The other cable is required to transfer data between an HFA II and an HFA II - i.

(Refer to HFA II - i User's guide for the data transfer set up instructions and Appendix C of the HFA II - i Service Manual for detailed Data Transfer procedures.)

P/N 52416	Connectors; DB9 to DB25	HFA I to HFA II - i Serial cable
P/N 52417	Connectors: DB9 to DB9	HFA II to HFA II - i Serial Cable

CARL ZEISS MEDITEC

SERVICE BULLETIN

Instrument:	**Humphrey Field Analyzer II-i**	No.:	**FA2i-005J**
Subject:	**Software Timeline / Features / Changes**	Date:	**25 Oct 06**
Status:	**Informational**	Pages:	**12**

This bulletin replaces Service Bulletin FA2i-005i

SOFTWARE TIMELINE

CPU - Central Processing Unit MDB - Motor Driver Board BP - Backplane Board

Software Revision	Part Number	Release Date	CPU Required	BP Required	MDB Required	CPU S/W Rev	BP S/W Rev	MDB S/W Rev	Starting Ser. No.
C1.1 System Software	obsolete	06/13/01	51477 Rev B	49700 Rev A.1	48530-3 Rev A.3	C1.1	A1	A1:A1:A1: A1:A1:A1:	Not Applicable *
C1.1 Diagnostic Service Tool	obsolete	06/13/01	51477 Rev B	49700 Rev A.1	48530-3 Rev A.3	C1.1	A1	A1:A1:A1: A1:A1:A1:	Not Applicable *
C1.1 HFA II Serial Disk	obsolete	06/13/01	51477 Rev B	49700 Rev A.1	48530-3 Rev A.3	C1.1	A1	A1:A1:A1: A1:A1:A1:	720i-5020 740i-7000 750i-8020
C1.1 HFA I Serial Disk	52169	06/13/01	51477 Rev B	49700 Rev A.1	48530-3 Rev A.3	C1.1	A1	A1:A1:A1: A1:A1:A1:	720i-5020 740i-7000 750i-8020
C1.1 Kinetic Disk	obsolete	06/13/01	51477 Rev B	49700 Rev A.1	48530-3 Rev A.3	C1.1	A1	A1:A1:A1: A1:A1:A1:	720i-5020 740i-7000 750i-8020
C2 System Software	obsolete	08/20/01	51477 Rev B	49700 Rev A.1	48530-3 Rev A.3	C2	A1	A2:A1:A1: A1:A1:A1:	720i-5020 740i-7000 750i-8020
C2 Diagnostic Service Tool	obsolete	08/20/01	51477 Rev B	49700 Rev A.1	48530-3 Rev A.3	C2	A1	A2:A1:A1: A1:A1:A1:	720i-5020 740i-7000 750i-8020
C3 System Software w/o MO	obsolete	10/12/01	51477 Rev C	49700 Rev A.1	48530-3 Rev A.3	C3	A1	A2:A1:A1: A1:A1:A1:	720i-5109 740i-9171 745i-4000 750i-8363

Software Revision	Part Number	Release Date	CPU Required	BP Required	MDB Required	CPU S/W Rev	BP S/W Rev	MDB S/W Rev	Starting Ser. No.
C3 System Software with MO	obsolete	10/12/01	51477 Rev C	49700 Rev A.1	48530-3 Rev A.3	C3	A1	A2:A1:A1: A1:A1:A1:	720i-5109 740i-9171 745i-4000 750i-8363
C3 Diagnostic Service Tool w/o MO	obsolete	10/12/01	51477 Rev C	49700 Rev A.1	48530-3 Rev A.3	C3	A1	A2:A1:A1: A1:A1:A1:	720i-5109 740i-9171 745i-4000 750i-8363
C3 Diagnostic Service Tool with MO	obsolete	10/12/01	51477 Rev C	49700 Rev A.1	48530-3 Rev A.3	C3	A1	A2:A1:A1: A1:A1:A1:	720i-5109 740i-9171 745i-4000 750i-8363
A1 German Options Tests	52862	10/12/01	51477 Rev C	49700 Rev A.1	48530-3 Rev A.3	C3	A1	A2:A1:A1: A1:A1:A1:	720i-5109 740i-9171 745i-4000 750i-8363
A2 HFA II - i BIOS	52847	10/12/01	51477 Rev C	49700 Rev A.1	48530-3 Rev A.3	C3	A1	A2:A1:A1: A1:A1:A1:	720i-5109 740i-9171 745i-4000 750i-8363
C3.1 System Software	obsolete	12/5/2001	51477 Rev C	49700 Rev A.1	48530-3 Rev A.3	C3.1	A1	A2:A1:A1: A1:A1:A1:	720i-5316 740i-9584 745i-4177 750i-8517
C3.1 Diagnostic Service Tool	53325 Obsolete	12/5/2001	51477 Rev C	49700 Rev A.1	48530-3 Rev A.3	C3.1	A1	A2:A1:A 1:A1:A1: A1:	720i-5316 740i- 9584 745i-4177 750i-8517
C1.2 Kinetic Disk	53425	12/5/200 1	51477 Rev C	49700 Rev A.1	48530-3 Rev A.3	C3.1	A1	A2:A1:A1: A1:A1:A1:	720i-5316 740i-9584 745i-4177 750i-8517
C1.2 HFA II Serial Disk	53426	12/5/2001	51477 Rev C	49700 Rev A.1	48530-3 Rev A.3	C3.1	A1	A2:A1:A1: A1:A1:A1:	720i-5316 740i-9584 745i-4177 750i-8517

Software Revision	Part Number	Release Date	CPU Required	BP Required	MDB Required	CPU S/W Rev	BP S/W Rev	MDB S/W Rev	Starting Ser. No.
3.2 System Software Disk	54799 Obsolete	10/25/02	51477 Rev C	49700 Rev A.1	48530-3 Rev A.3	C3.2	A1	A2:A1A1 :A1A1:A 1	720i-5494 740i-10621 745i-4406 750i-9043
3.3 Number Not Used									
3.4 System Software Disk	55727	4/4/03	51477 Rev C or 55392 Rev A	49700 Rev A.1	48530-3 Rev A.3	C3.4	A1	A2:A1A1 :A1A1:A 1	720i-5815 740i-11330 745i-4546 750i-9376
3.4 Diagnostic Service Tool	55744	4/4/03	51477 Rev C or 55392 Rev A	49700 Rev A.1	48530-3 Rev A.3	C3.4	A1	A2:A1A1 :A1A1:A 1	720i-5815 740i-11330 745i-4546 750i-9376
3.4.5 System Software Disk	56102	06/13/03	51477 Rev C or 55392 Rev A	49700 Rev A.1	48530-3 Rev A.3	C3.4.5	A1	A2:A1A1 :A1A1:A 1	720i-5815 740i-11330 745i-4546 750i-9376
3.4.5 Diagnostic Service Tool	56108	06/13/03	51477 Rev C or 55392 Rev A	49700 Rev A.1	48530-3 Rev A.3	C3.4.5	A1	A2:A1A1 :A1A1:A 1	720i-5838 740i-11446 745i-4559 750i-9393
3.4.6 SSE System Software Disk	55247	07/01/03	51477 Rev C or 55392 Rev A	49700 Rev A.1	48530-3 Rev A.3	C3.4.6	A1	A2:A1A1 :A1A1:A 1	A Very Few Selected Customer Sites
3.4.6 SSE Diagnostic Service Tool	55250	07/01/03	51477 Rev C or 55392 Rev A	49700 Rev A.1	48530-3 Rev A.3	C3.4.6	A1	A2:A1A1 :A1A1:A 1	Never issued to the field
3.5 System Software Disk	56558	10/11/03	51477 Rev C or 55392 Rev A	49700 Rev A.1	48530-3 Rev A.3	C3.5	A1	A2:A1A1 :A1A1:A 1	720i-6065 740i-12072 745i-4690 750i-9689

Software Revision	Part Number	Release Date	CPU Required	BP Required	MDB Required	CPU S/W Rev	BP S/W Rev	MDB S/W Rev	Starting Ser. No.
3.6(0502) XML System Software Disk	xxxxx	Jan/04 (limited dis-tribution)	51477 Rev C or 55392 Rev A	49700 Rev A.1	48530-3 Rev A.3	3.6	A1	A2:A1A1 :A1A1:A 1	N/A
4.0 System Software Disk	57352	Oct/05	51477 Rev C or 55392 Rev A	49700 Rev A.1	48530-3 Rev A.3	3.6	A1	A3:A1A1 :A1A1:A 1 or A10	TBD
4.1 System Software Disk	60138	Oct/06	60673 Rev A		48530-3 Rev A.3 or 61190 Rev A	4.1	B2	A3:A1A1: A1A1:A1 or A10	720i-7374 740i-15356 745i-5774 750i-11211
4.1.1 Diagnostic Service Tool Disk	63025	Oct/06	60673 Rev A		48530-3 Rev A.3 or 61190 Rev A	4.1	B2	A3:A1A1: A1A1:A1 or A10	N/A
SBEP110J BIOS Install Disk	61753	Oct/06	60673 Rev A		48530-3 Rev A.3 or 61190 Rev A	4.1	B2	A3:A1A1: A1A1:A1 or A10	720i-7374 740i-15356 745i-5774 750i-11211

***Note -** No units have been shipped with C1.1 version software*

SOFTWARE FEATURES - Rev. C1.1 (P/N 52147)

- All HFA II - i models 720, 740 and 750 are supported.
- DST version C1.1 is also released with this software.

KNOWN ERRORS/ ISSUES - Rev. C1.1

- Blank screen appears during startup.
- A data base cannot be restored from a backup floppy made on an HFA II.
- You can only re-initialize a floppy disk. This is equivalent to a quick format on a PC. If the floppy is unformatted, you will need to format it on a PC or an HFA II.

- **During power-up a "Non system disk or disk error" message will appear if a non-system floppy is in the drive, provided the first boot device is set to floppy instead of hard drive in the BIOS CMOS settings.**
- When using a magneto optical disk for the first time, you must first initialize it by selecting initialize disk from the file functions menu.
- If you remove a database floppy disk from the floppy drive while attempting to print from the floppy database, a "Floppy Disk Not Present" or "Error Reading From Floppy" message will appear.
- If attempts are made to install the HFA II - i application software on an unformatted hard drive (a non Humphrey hard drive), the load will fail. You must first partition the hard drive as a FAT 16 single partition system.

SOFTWARE FEATURES / CHANGES - Rev. C2 (P/N 52486)

- The HFA II - i C2 interface is essentially the same as that of HFA II - i C1.1. However, there are changes to accommodate the new TCP/IP interface. This installer for this version includes a touch screen only user interface.
- All HFA II - i models 720, 740 and 750 are supported.
- DST version C2 is also released with this software (P/N 52615).
- This C2 installer installs the C2 version of the HFA II - i system software including the A2 version of the motor board software required by the motor board (P/N 48530-3).

KNOWN ERRORS/ ISSUES - Rev. C2

- Same issues apply to C2 as on the C1.1, there have been no corrections made.
- Intermittent Kinetic printing defect on PRINTREX printers only. The PRINTREX printers some times (about 10% of the time) print Kinetic tests with one byte missing. However, if you occasionally print a second time this problem should be gone.
- The Application and the DST installer only accept operator response via the touch screen and not via the keyboard. This is intentional to fit the application and the DST installer on a minimum number of floppy disks. However, both the system application and the DST application support the keyboard, touch screen, and mouse.
- C2 software performed a date check upon startup. If the date was later than Jan 1989, the instrument would go through the normal boot process. If the date was not valid, the system would not boot any further, hanging the system.
- C2 software will not boot if the MO drive is disconnected or inoperative.

SOFTWARE FEATURES - Rev. C3 (P/N 52907- No MO, P/N 52944 - MO)

Two distinct sets of software have been created for the C3 System Software release. One set is used for instruments with a Magnetic Optical Drive. The second set is for units without Magnetic Optical Drive.

- Allows loading of system software via floppy diskettes with use of only the touch screen.
- Allows loading of optional software without having to restart the system.
- Recognizes Models 735i and 745i.
- German Optional test strategy disk shall enable the German specialty tests and the Optima strategy.
- The Magnetic Optical Drive is now an option for the models 720i, 735i, 740i, and 745i.
- DST will allow the adding or removal of the Magneto Optical Drive via a button.
- DST will have model/hardware options for the 720i, 735i, 740i, 745i and 750i models.
- Invalid dates found at the startup will initiate a prompt that states, "Please contact Field Service. Instrument Date and Time are Incorrect. This may be due to low battery voltage, you can temporarily correct the time and date. The date will automatically be set to Jan 01,1989".

KNOWN ERRORS/ ISSUES - Rev. C3

- C3 software will not boot if the MO drive is disconnected or inoperative.
- Uninitialized MO diskettes will cause the system to hang during an attempt to perform a backup from hard drive.
- Attempting to load the C3-MO system software on a 750i instrument that has system software revision C2 will result in several 750 unique features being disabled. The instrument will have a 745 like model set of features.
- There are some issues using the C3 and earlier software with the HP LaserJet 4L printer.

SOFTWARE FEATURES - Rev. C3.1 (P/N 53324)

- Allows instrument to boot if the magnetic optical drive is disconnected or inoperative.
- System software will continue to function if a backup is attempted with an uninitialized magnetic optical disk.
- Will not disable certain 750I features if loaded over C2 software.
- Both Printrex and HP Laserjet printing have been improved.
- Includes an internal self-test for date checking. The self-test is set to run in the background unnoticed, customers may see a pop up window asking them to verify the date shown.

KNOWN ERRORS/ ISSUES - Rev. C3.1

- Floppy databases created on the HFA II can not be restored on the HFA 2i.
- Blank screen appears at startup.
- You can only re-initialize a floppy on the HFA 2i. If a floppy is unformatted it must be formatted on a PC prior to use on the HFA2i.
- Removing a floppy disk from the floppy drive during a printout will create errors.
- You may see shifted text or extra slashes (/) on the extreme left side of a Printex printout.
- Models 720 may show either 115908 as a software option code if revision 3.1 is loaded over a C2.X revision. The normal 11590C software option code can be restored on instruments with the 115908 soft option code by restoring the calibration configuration diskette on the system. Note that it is not necessary to change the code from 115908. All 720 units with the 115908 code will function normally.

SOFTWARE FEATURES - DST Rev. C3.1 (P/N 53325)

- The C3.1 DST consists of one set of disks that works for instrument with or without a Magnetic Optical drive. Otherwise the DST is identical to the C3 revision.

KNOWN ERRORS/ ISSUES - DST Rev. C3.1

- The DST tool installer only accepts input from the touch screen. Keyboard input will be ignored during the installation. Keyboard, touch screen and mouse inputs will function after the DST is running.

SOFTWARE FEATURES - Rev. 3.2 (P/N 54799)

- The 3.2 application software changes the NVM printout to include a set of preferred values that will reduce the probability that light intensity errors will occur.

- The 3.2 application software provides an 'evaluate test date' function that will scan the HFA 2i database for test dates older than 8-24-01, or later than the current date. This function is used to detect questionable test dates that may have been entered as a result of a real time clock read failure that could occur in earlier software revisions. See Service Bulletin FA2i-015(X) for details.
- The 3.2 application software corrects the condition that results in the incorrect patient name on the printouts. See Service Bulletin FA2i-015(X) for details.

KNOWN ERRORS/ ISSUES - Rev. 3.2

- The 3.2 application software has the same issues as the C3.1 revision other than those fixed as indicated above.

SOFTWARE FEATURES - Rev. 3.4 (P/N 55727)

- The 3.4 application software corrects a problem with the keyboard initialization process that results in spurious characters in the data input screen displays.
- Modifications to the Change Parameters screens have been made to make it easier to see the options available for the parameter selected, based on the test strategy. For example, if SITA STANDARD is the test strategy selected, the "Stimulus Size" selection displayed will be III. As size III stimulus is the only stimulus size available for a SITA test, none of the other stimulus sizes will be active; they will be "ghosted" or "grayed out".

KNOWN ERRORS/ ISSUES - Rev. 3.4

- All instruments having the CPU part number 55392 must use the 3.4 revision application software. Revision 3.4 application software is compatible with the 51477 CPU that use the 801-0010-03 (original release) BIOS. Details of the SBEP103B BIOS and 55392 CPU are discussed in bulletin HFA2i-017. If a previous version of the application software is used with the 55392 CPU board, spurious characters will be seen in the data input screen displays.
- The 3.4. application software has the same issues as the C3.1 revision other than those fixed as indicated above.

SOFTWARE FEATURES - DST Rev. 3.4 (P/N 55744)

- The DST for rev 3.4 application software was designed to work with CPU part number 55392.
- The DST 3.4 will function with any HFA2i running the 3.1 or higher revision application software loaded on the instrument with the 51477 CPU. CPU part number 51477 uses the 801-0010-03 (original release) BIOS.
- No functional changes were made to the DST other than the correction for the spurious characters.

KNOWN ERRORS/ ISSUES - DST Rev. 3.4

- The 3.4 DST software must be used with instruments with CPU part number 55392. All CPU's with part number 55392 use the SBEP103B BIOS. Details of the 55392 CPU and the SBEP103B BIOS are discussed in Service BulletinFA2i-017. If a previous version of the DST is used with the 55392 CPU board, spurious characters will be seen in the data input screen displays.

SOFTWARE FEATURES - Rev. 3.4.5 Application Software (P/N 56102)

- **The revision 3.4.5 software corrects a problem where the instrument attempts to start up but fails to get to the main menu. The display will be blank and the instrument will give no indication that a failure has happened.**

KNOWN ERRORS/ ISSUES - Application Software Rev. 3.4.5

- All instruments having the CPU part number 55392 must use the 3.4 or 3.4.5 Application software. Software revision 3.4 and revision 3.4.5 application software are compatible with the 51477 CPU that uses the original release BIOS. Details of the new BIOS and 55392 CPU are discussed in bulletin HFA2i-017. If a previous version of the application software is used with the 55392 CPU board, spurious characters will be seen in the data input screen displays.
- The 3.4.5 application software has the same issues as the C3.1 revision other than those fixed as indicated above.

SOFTWARE FEATURES - Rev. 3.4.5 DST (P/N 56108)

- **The revision 3.4.5 DST software corrects a problem where the instrument attempts to start up but fails to get to the main menu. The display will be blank and the instrument will give no indication that a failure has happened.**

KNOWN ERRORS/ ISSUES - Rev. 3.4.5 DST

- All instruments having the CPU part number 55392 must use the 3.4 or 3.4.5 DST software. DST software revision 3.4 and revision 3.4.5 DST software are compatible with the 51477 CPU that uses the original release BIOS. Details of the new BIOS and 55392 CPU are discussed in bulletin HFA2i-017. If a previous version of the DST software is used with the 55392 CPU board, spurious characters will be seen in the data input screen displays.
- The 3.4.5 DST software has the same issues as the C3.1 revision DST other than those fixed as indicated above.

SOFTWARE FEATURES - Rev. 3.4.6 SSE Application Software (P/N 55247)

- **Releases HFA2P 3.4.6 SSE, a SITA SWAP version of the HFA2P System Software. This is a limited distribution release created to collect normal patient data for SITA/SWAP and to be used in selected research clinical studies. It shall not be distributed to any other HFA2P customers.**

- For HFA2P version 3.4.6 SSE, the Threshold Parameters Setup menu has been greatly remodeled. The menu no longer displays alerts when the setting of one parameter conflicts with that of another parameter. Instead, priority is given to the strategy, second to blue-yellow. Any parameter in conflict with strategy will be set to its correct value without warning. If only one value for a given parameter is valid for the selected strategy, then this parameter shall be disabled and set to the valid value.

KNOWN ERRORS/ ISSUES - Application Software Rev. 3.4.6

- Blank screens still appear during startup.
- A database cannot be restored from a backup floppy made on an HFA II. You can only re-initialize a floppy disk. This is equivalent to a quick format on a PC. If the floppy is unformatted, you will need to format it on a PC or an HFA2.
- You can leave a floppy in the drive during boot if you change the CMOS settings so that the instrument first attempts to boot from the hard drive and then attempts to boot from floppy.
- Do not remove a database floppy disk while printing from the floppy database.
- The 3.4.6 application software has the same issues as the C3.1 revision.

SOFTWARE FEATURES - DST Rev. 3.4.6 SSE (P/N 55250)

- The DST for rev 3.4.6 application software was designed to work with rev 3.4.6 application software only. It will not be issued to the field. Any request for exceptions should be directed to CZMI Technical Support.

KNOWN ERRORS/ ISSUES - Rev. 3.4.6 SSE DST

- No new errors known.

SOFTWARE FEATURES - Rev. 3.5 Application Software (P/N 56558)

- Release of the HFA2P revision 3.5 software provides the application code needed to perform a Glaucoma Progression Analysis (GPA) printout. Details of how to setup and use Glaucoma Progression Analysis are found in the addendum for section 7A of the Humphrey Field Analyzer II User's Guide.
- Before the GPA software will function, the GPA licensing process must be completed. Details of the licensing process will be available in the FA2i-025 service bulletin. Customer instructions for licensing the GPA software are provided to the customer when the GPA kit is purchased.
- The "i" screen has been updated to show if the GPA function is enabled or not.

KNOWN ERRORS/ ISSUES - Application Software Rev. 3.5

- If the date of birth information is entered after the name information in the Patient Information screen and the date is entered as MM/DD/YYYY, an error display indicating that the DOB is incorrectly input will result. If the DOB is entered before the patient name or the DOB is entered in the MM/DD/YY format, it will be correctly displayed.

SOFTWARE FEATURES - Rev. 3.6 - XML Application Software (P/N xxxxx) [4 - disk set]

- Not for commercial release — the HFA2P revision 3.6 software provides the application code needed to export exam data in XML format and the export of print images in bitmap file format.
- Automatically export the XML files at the end of the exam or at any time on command using the Transfer Tests menu.
- Automatically export the XML single page print out in bitmap file format at the end of the exam or at any time on command using the Transfer Tests menu.

KNOWN ERRORS/ ISSUES - Application Software Rev. 3.6 - XML

- The HFA2P network will not function if an active network connection is not available at boot time.
- The FTP password entered using versions prior to version 3.6(0500), will get corrupted because the new version expects an encrypted password. The FTP password needs to be re-entered with the new version.
- Kinetic exams are not transferred.
- User can only specify one server IP address for Data Export and TCP/IP transfers in HFA II - Serial format. This release does not support specifying two servers independently.

RESTRICTIONS / LIMITATIONS

- Current release does not support exporting of XML files for Kinetic exams.
- Only single page prints can be exported in bitmap file format.
- ***NOTE:*** *This software cannot be ordered.*

SOFTWARE FEATURES - Rev. 4.0 Application Software (P/N 57352)

Networking Features Standard (Optional for all models)
- Archive patient data, test results and image files (tif format) to a file server.
- Synchronize databases on two or more HFA2i perimeters.
- Backup patient data and test results to a file server for safe external storage or off-line backup.
- Restore patient data and test results from the network server to the HFA2i.
- Export image files of printouts.
- **Must be licensed**.

HFA-NET Pro Features (Optional for all models except 720i)
- Import Worklists from certified EMR system.
- Export patient data, image files (tif format) and test results to a certified EMR system.
- **Must be licensed**.

Sita SWAP Features (Standard with 750i and 745i models)
- Performs a SWAP (Short Wavelength Automated Perimetry) test using the SITA (Swedish Interactive Test Algorithm)**.**
- **Must be licensed**.

GPA Features (Standard with 750i, 745i and 740i models).
- Enhanced performance Glaucoma Progression Analysis.
- **Must be licensed**.

Additional Features
- Improved performance of Change Analysis Printout when analyzing 30-2 only printouts.
- Reduction of name and exam association errors that may arise when saving tests.
- Elimination of Serial Options Disk when performing a data transfer.
- Elimination of Transfer Only choice on Save and Transmit Options
- Improved readability of floppies created on an HFA II.
- Increased name and ID field length from 24 characters to 60 characters.

SERVICE FEATURES - Application Software Rev. 4.0

- Licensing of Network, NetPro, GPA and SITA SWAP.
- Configuration of Instrument for Network and NetPro.
- Database Upgrade.
- Save to floppy the text files of system log, information screen, and calibration values.
- New tools for evaluating Networking parameters.

SERVICE CONCERNS - Application Software Rev. 4.0

- **Data created on a HFA 2i with a revision 4.0 software will not be able to be saved to a HFA2i with software revision lower than 4.0 or to any HFA II system.** See page 2 of the HFA II-i System Software Upgrade document P/N 58122.
- Database upgrade may not be possible on existing hard drive partition due to the partition being nearly full. If the existing 2.0 gigabyte partition is nearly full, a second partition may be created on the hard drive or replacement of the hard drive with a drive that can be repartitioned to meet the system needs. A separate service bulletin will cover this topic.

KNOWN ERRORS/ ISSUES - Application Software Rev. 4.0

- None.

SOFTWARE FEATURES - Rev. 4.1 Application Software (P/N 60138)

Changes

- Revision 4.1 software was designed to be compatible with the new EMI Box and the new Motor Driver Board. If either the new EMI box (P/N 60673) or the new MDB are used, the 4.1 software must be loaded. Details are presented in HFA2i-036 and HFA2i-038.
- Changes to Touch Screen Calibration – Rev 4.1 will beep when you have held your finger on the calibration target for the required amount of time.
- Startup Test to Determine Calibration of Aperture – At startup of the instrument, an evaluation of correct aperture positioning takes place. Failure of the test will result in a Startup State Error 19 error that says Aperture may be misaligned. Pressing Proceed will not allow testing. Recalibration of the aperture and measurement of the spot ratio with a value within specification, will be required before testing can proceed.
- Startup Test to Determine Shutter Misalignment – At startup of the instrument, an evaluation of correct shutter positioning takes place. Failure of the test will result in a Startup State Error 18 error that says Shutter may be misaligned. Pressing Proceed will not allow testing. Recalibration will be required before testing can proceed.

New Features

- There are no new features or enhancements in the HFA2i Rev 4.1 software.

Fixes

- The failure to save to a floppy disk at the end of the test when the system gives the “floppy full, please insert a new formatted floppy” message, has been corrected. With the rev 4.1 software the tests will be saved when the new formatted floppy is inserted after the prompt.
- Long patient names are now displayed in accordance with the industry standards.
- The setting of the default single field printout style for instruments with GPA will default to GPA rather than classic printout once the GPA feature is licensed.

- The C10-2 tests will now appear on the printout if a SFA printout is selected when the 10-2 test was the most recent.
- The instrument will no longer crash when an invalid date is encountered in a worklist. The date will be discarded.
- The system will not crash when it encounters an option returned from the DHCP server that is not supported by RFR2132 standard. Unsupported options will be deleted in rev 4.1.

SERVICE FEATURES - Application Software Rev. 4.1

- Licensing of Network, NetPro, GPA and SITA SWAP will be required to enable these features.

SERVICE CONCERNS - Application Software Rev. 4.1

- Startup State Errors 18 and 19 may be generated on first power up of the instrument after loading the rev 4.1 software. See Changes above for details.
- In the Mechanical Calibration Menu, a new section titled V/III Spot Ratio, has been added. This section displays the currently stored value and has a button to measure the spot ratio for spot sizes V (5) and III (3). A service bulletin will be released to address the new calibration procedure.
- Data created on a HFA 2i with a revision 4.0 software will not be able to be saved to a HFA2i with software revision lower than 4.0 or to any HFA II system. See the HFA II-i System Software Upgrade document.
- If the existing 2.0 gigabyte partition is nearly full, a second partition may be created on the hard drive or replacement of the hard drive, with a drive that can be re-partitioned to meet the system needs. Service bulletin FA2i-037 will cover this topic.

SOFTWARE FEATURES - Diagnostic Service Tool Disk Rev. 4.1.1 (P/N 63025)

Changes

- DST Revision 4.1.1 software was designed to be compatible with the new EMI Box, BIOS, and the new Motor Driver Board that are associated with the release of revision 4.1 software. DST rev 4.1.1 will work with all HFA2i hardware and software configurations. There are no new features for the DST 4.1.1 revision.

SOFTWARE FEATURES - BIOS Disk SBEP 110J (P/N 61753)

Changes

- The SBEP110J BIOS disk was designed to support the new backplane. The SBEP110J BIOS is compatible with the new and old backplanes, EMI Boxes and Motor Driver Boards.
- Under most circumstances you will not need to load the SBEP110J BIOS. The SBEP110J BIOS will be loaded on all new EMI boxes with part number 60673. The only circumstance that would require loading the SBEP110J BIOS would be a suspicion of corruption to the existing BIOS.

Ú Ú Ú **NOTICE** Ú Ú Ú

Any unauthorized HFA II upgrades (those performed without notifying Carl Zeiss Meditec Inc.) will automatically be downgraded to the model and features that existed prior to the unauthorized upgrade, when a future revision of software is loaded onto the instrument.

SERVICE BULLETIN

Instrument:	**Humphrey Field Analyzer II - i**	No.:	**FA2i-006**
Subject:	**HFA II - i Service Manual, P/N 52235, Rev B Release**	Date:	**16 Dec 01**
Status:	**Informational**	Pages:	**2**

An update package of revised pages for the Humphrey Field Analyzer II - i Service Guide has been produced to make a variety of corrections and additions. The update package updates the Revision A field service guide (P/N 52235) to Revision B. Please remove the specified pages within the field service guide and replace them with these updated pages.

Due to the large number of pages involved in this update, distribution of the update is being done selectively, as follows:

U.S. Domestic Field Service

- **O** Each Regional Field Service Manager and each Service Support Engineer recorded as Humphrey Field Analyzer II - i trained will receive a copy of the update along with this bulletin.
- **O** All other individuals on the bulletin distribution will receive this bulletin only.

Any U.S. Domestic Service Representative ***who is Humphrey Field Analyzer II - i trained*** and fails to receive the update package with this bulletin should contact the Humphrey Technical Support Administrative Assistant.

International Operations

- **!** Each Affiliate and Distributor will reveive a copy of the update along with this bulletin.
- **!** All other individuals on the bulletin distribution will receive this bulletin only.

Any International Service Rep ***who is Humphrey Field Analyzer II - i trained*** and does not receive the update package with this bulletin should contact the person responsible for their area of international operations.

Additional copies of the HFA II - i Service Manual are available by standard parts order.

Item: . . . . HFA II - i Service Manual

P/N: . . . . 52235, Rev B

Revision B Update Package for Humphrey Field Analyzer II - i Field Service Guide, P/N 52235

Highlights:

Rev B changes to the Humphrey Field Analyzer II - i Field Service Guide cover a broad range, including:

- Corrections to the Rev A edition.
- Additions / corrections of part numbers.
- Additions and changes to parts Removal and Replacement.
- Checkout procedural changes, additions, and deletions.
- Changes and additions to tool requirements.
- Changes and additions to the additional information provided in the appendix.

Significant changes are noted on revised pages by a vertical bar in the left margin.

Action Required:

Replace selected pages in your Humphrey Field Analyzer II - i Field Service Guide with the corresponding Rev B update pages enclosed.

SERVICE BULLETIN

Instrument:	**Humphrey Field Analyzer II-i**	No.:	**FA2i-007B**
Subject:	**Magnetic Optical (MO) Drive Upgrade Procedure**	Date:	**5 Nov 03**
Status:	**Informational**	Pages:	**3**

This service bulletin replaces FA2i-007A

The information and instructions provided in this service bulletin will enable an HFA 2i service technician to install the MO drive upgrade in models starting with the following serial numbers:

720i-5109 **740i-9171** **745i-4000**

The MO drive upgrade provides the customer with a convenient and easy method of backing up the database in the above listed models. The MO drive is standard in the 750i.

The MO drive can use either a 230Mb optical disk (supplied) or a 640Mb optical disk (optional) [P/N 51474].

Kit (P/N 52969) is required for the MO drive upgrade and contains the following parts:

PART NUMBER	QTY	DESCRIPTION
51476	1	Assy., MO Drive
29378-3	1	Panel, Disk Drives (Front Molded Panel)
33905	1	MO Disk - 230Mb
51486	1	Panel (black metal spacer between MO drive and Floppy drive)
xxxxx	1	Latest Software Set (see FA2i-005x)
32382	2	Washer, Split M3/5.6/1.0 SST
28293-8	2	Screw, M3 x 8 Soc HD Cap S/BZ
14446	4	Washer, SQ Cone .142/.307/.039 ST
14196	4	Screw, 6-32 x .250 Soc HD Cap ST

Note – *DST diagnostic diskettes will be required for this upgrade* (see FA2i-005x).

Upgrade Procedure

1) Perform a pre-checkout on the instrument using Part I of the checklist in Section 2 of the HFA 2i service manual.
2) Check strapping of the MO drive per service bulletin HFA2i-003x.
3) Power off the instrument.
4) Install the MO drive using the hardware that comes with the MO drive assembly. Refer to Figure 1.
5) Connect the power and data cables to the MO drive.
6) Insert DST disk# 1. Power on the instrument and follow the on-screen instructions to install the DST software disks. Once the DST software has been loaded, select the following:
   a) From the DST Main Menu, select Configuration.
   b) Select Set Model / Hardware Options.
   c) Select Install MO Drive (it will only beep, nothing else is displayed).
7) Power off the instrument.

8) Insert the System Software disk# 1 of the set. Power on the instrument, and follow the on-screen instructions to install the System Software.
9) Once the latest system software has been installed, power off/on the instrument.
10) Perform a post-checkout on the instrument using the Operational Checks of the checklist in section 2 of the HFA 2i service manual (this will include testing the MO drive for proper operation).
11) [**IMPORTANT**] Save the new changes to the calibration diskette.
12) Complete the Upgrade Notification sheet and fax to Technical Support.
Note – Make copies of this sheet for use with future upgrades.

REFER to Figure 1:

Item	Part No.	Description
1	51290	Assy, LED, Hard Drive, IBM (720i, 740i, 745i, 750i)
	680978	Cable Clamp, Assy LED (Not Shown)
2	52036	Drive, Hard, IDE 20 Gigabyte, (720i, 740i, 745i, 750i)
3	29631	Holder, LED, Hard Drive
4	51476	Drive, Magnetic Optical, 3 ½", ATAPI
5	29244	Drive, Floppy, 3½", High Density
6	06548	Screw, 6-32 x .375, Soc HD Cap
7	14446	Washer, Square Cone, .142/.307/.039
8	24073	Label, Drive Date Code
9	28293-8	Screw, M3 x 8, Soc HD Cap
10	14196	Screw, 6-32 x .250, Soc HD Cap
11	51486	Panel (black metal spacer between MO drive and Floppy drive) (attached using items 7 & 9)

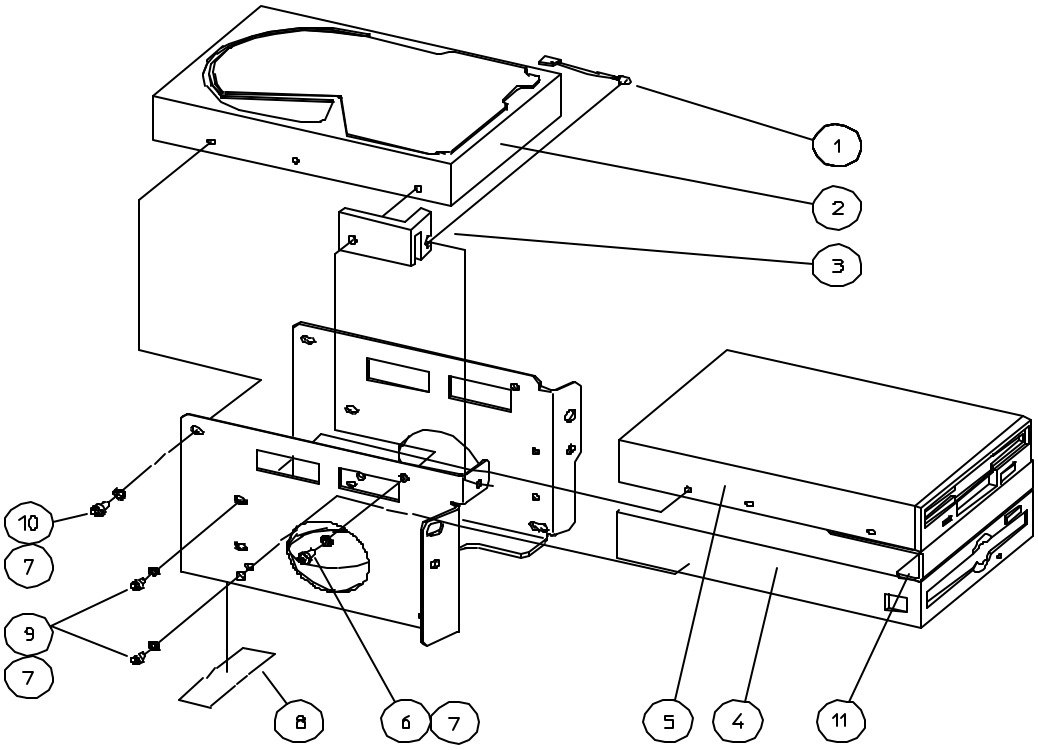

FIGURE 1. Installing the MO Drive

facsimile
TRANSMITTAL

to: **HUMPHREY TECHNICAL SUPPORT**

fax #: 925-557-4652

re: HFA 2i Upgrade Notification

date:

pages: 1, including this cover sheet.

Technician's Name and Affiliate/Distributor Fax No. _____

Instrument Serial No. _____

Customer's Name and Address: _____

_____

_____

_____

Date Upgrade Performed: _____

Type of Upgrade Performed (circle):

- 720i wo/MO -to-720i w/MO Upgrade
- 740i wo/MO -to-740i w/MO Upgrade
- 745i wo/MO -to-745i w/MO Upgrade

Comments: _____

_____

_____

Note – *Use black ink in filling out this form. Please print clearly.*

SERVICE BULLETIN

Instrument:	**Humphrey Field Analyzer 2i**	No.:	**FA2i-008**
Subject:	**Product Changes and New Options**	Date:	**18 Apr 02**
Status:	**Informational**	Pages:	**1**

The following changes have occurred on the HFA 2i and power table:

- MO Drive removed on all models except 750i.
- Slider removed from all power tables.
- Keyboard removed from all models except 750i.
- Spare yellow lamp (29954) removed from the accessory kit (effects models 745i and 750i only).
- Thermal printer paper (24433) reduced to 2 rolls for instruments delivered with a Printrex printer.

The MO drive and Keyboard are now purchased options for all HFA 2i models except for the 750i.

The Slider is also a purchased option for all HFA 2i models. The power table can, however, be ordered with a slider attached at time of purchase.

Option	**Part Number**
MO drive kit	52969
Slider Kit	53533
Keyboard w/touch pad	51467

SERVICE BULLETIN

Instrument:	**Humphrey Field Analyzer II-i**	No.:	**FA2i-009**
Subject:	**New CCD Camera, Cable & Support PCBA**	Date:	**04 Apr 02**
Status:	**Informational**	Pages:	**1**

PROBLEM

The CCD camera manufacture has obsoleted this model.

SOLUTION

Replace the current CCD camera with a new CCD camera FRU (see below).

Part Number	Description
53850	Kit, FRU, CCD Camera

KIT INCLUDES

52937-2	CCD Camera
53001	Cable
46340-3	Support PCBA

Note – *The new CCD Camera, Cable, and Support PCBA are backwards compatible with all models of the HFA II-i.*

Starting Serial Numbers

720i-5224 - Pilot
720i-5226 - Pilot
720i-5236 - Starting
740i-9640 - Pilot
740i-9646 - Pilot
740i-9698 - Starting
745i-4183 - Pilot
745i-4184 - Pilot
745i-4191 - Starting
750i-8516 - Pilot
750i-8525 - Pilot
750i-8547 - Starting

SERVICE BULLETIN

Instrument:	**Humphrey Field Analyzer II-i**	No.:	**FA2i-010**
Subject:	**Model 745i added / Magneto-optical disk drive removed from all models except 750i.**	Date:	**01 Apr 02**
Status:	**Informational**	Pages:	**1**

The model 745i has been introduced as part of the i-series instruments joining the 720i, 740i and 750i models.

The 745i has all the features of the 740i with the addition of Blue/Yellow testing capabilities.

Models 720i, 740i and 745i do not ship with a Magneto-optical disk drive or keyboard.

The User's Guide has been updated to reflect the addition of the 745i and the removal of the Magneto-optical disk drive from all models except the 750i. The addendum to the User's Guide is Humphrey part number 53538-1.

SERVICE BULLETIN

Instrument:	**Humphrey Field Analyzer II-i**	No.:	**FA2i-011**
Subject:	**CPU Replacement**	Date:	**23 Apr 02**
Status:	**Informational**	Pages:	**1**

Humphrey receives the entire CPU/Backplane enclosure (P/N 51804) from our supplier. The supplier requires that the entire enclosure be returned for all warranty claims or repairs. Individual parts **CANNOT** be returned.

Therefore, future orders for individual PCBA's (CPU and Backplane) can no longer be processed. Orders will only be processed for the entire enclosure.

We apologize for any inconvenience this may cause you.

PART NUMBER	DESCRIPTION
51804	CPU/Backplane Enclosure and Shipping Box.
51978	Shipping Box only w/foam insert for CPU/Backplane Enclosure.

SERVICE BULLETIN

Instrument:	**Humphrey Field Analyzer II-i**	No.:	**FA2i-012**
Subject:	**740i to 745i Blue-Yellow Upgrade**	Date:	**29 Jul 02**
Status:	**Informational**	Pages:	**15**

General Information

The information and instructions provided in this service bulletin will enable a trained HFA II-i technician to upgrade a model 740i to the Blue-Yellow option.

The upgrade from a model 740i to Blue-Yellow (becomes a model 745i) adds the capability to run Blue-Yellow tests and enables Blue-Yellow Statpac.

Before You Start

Listed below are a number of questions and answers that you should review before beginning the upgrade.

What is the minimum HFA II-i Model that can be upgraded to Blue-Yellow?

The following Marketing Department policy has been established: As a prerequisite to performing the Blue-Yellow upgrade, ensure that the instrument is at minimum a model 740i.

What is the minimum skill level for a technician to perform the upgrade?

This upgrade should only be performed if the technician has complete parts removal and replacement knowledge and complete instrument calibration knowledge. The procedures in this service bulletin offer guidelines for performing the upgrade. It is assumed that the technician has complete HFA II-i service knowledge.

How long will the upgrade take to complete?

The estimated time to complete the Blue-Yellow upgrade is 6.0 hours. This time takes into account an instrument pre-checkout, hardware and software changes, an instrument post-checkout, time to correct any unforeseen problems, and time to provide some limited customer training.

Tools Required to Perform the Upgrade

Listed below are the tools required to perform the upgrade.

Description	Part No.
HFA II-i Service Manual and Service Bulletins	52235
Soligor Light Meter Kit	14905
Soligor Mount Adaptor (HFA I/II) (set of 2)	30248

Bowl Shroud	30177
Tool Stand Assembly	30251
Trial Lens Alignment Adaptor (Zero degree)	49647
Fake Eye	30079
Tool Stand	30137
Chinrest Mount	30135
Trial Lens Holder Height Adapter	30183
Tool Sand Alignment Adapter	30253
Mirror Tool	24501
Fore Head Rest Hook	49834
Spot Positioning Cross Fixture	29868
Brightness Detector Alignment Target	30257
Projection Mount	30247
Operator Panel Extension/Support	49784
Diagnostic Support Tool (DST) diskette	53325 (C3.1)
Grease, Rheolube 362, 2 oz jar	08780
Miscellaneous Hand Tools	(acquire locally)
Mirror (hand-held)	(acquire locally)
Pen Light (AAA battery size)	(acquire locally)
Self-stick notes (small)	(acquire locally)

Upgrade Kit Part Numbers

When you open the upgrade kit box, inventory all of the parts before beginning the upgrade. If any parts are missing, please contact Humphrey Systems. For parts missing from U.S. Domestic orders, contact Customer Service Parts. For parts missing from international orders, contact the International Parts Order Administrator for your country.

NOTE: *Each upgrade kit contains the current revision of HFA II-i System Software. This revision of software wi loaded into the instrument as part of the upgrade procedure.*

Description	Part No.	Quantity
740i to 745i (includes Blue-Yellow Upgrade Kit (contains all parts listed)	**30557-8**	
HFA II-i System Software (Current Revision)	N/A	1
Color Wheel	29979-3	1
Washer, Flat, .223/.366/.031, Nylon	07063	3
Washer, Flat, .200/.359/.048, SST	21517	3
Washer, Curvy, .200/.370/.006, SST	30031	2
Retainer Ring	06085	1
Lamp, Halogen	29954	1
*Retainer, Filter	24489	1
*Filter, Heat	29956	1
*Diffuser	29958	1
*Filter, Yellow	29957	1
*Bracket, Filter Mounting	29950	1
Washer, Square Cone	14446	3
Screw, M3 x 8	28293-8	3
Screw, M4 x 8	28295-8	2
Washer, Square Cone	14445	2
Washer, .187/.750/.060, SST	29738	2
Tape, Foam	01147	8 inches
Lamp Assy, Yellow	30071	1
Tie Wrap, 4"	00673	2

Mount, Cable	01362	1
Rest, Forehead	30076	1
Bracket, Visor	30068	1
Visor	30069	1
Screw, 2-56	22715	2

* The Yellow bowl lamp filter comes pre-assembled.

Installation Guidelines

The installation guidelines will make frequent reference to a section in the HFA II-i Service Guide. For example, you may see ***section 2, 3***, or ***Appendix G*** following an instruction. This indicates that you can refer to those sections in the HFA II-i Service Guide for additional help on completing that particular procedure.

Instrument Pre-Checkout

Prior to beginning the upgrade, it is essential that you gather all instrument operational data. Without first acquiring this information, you may encounter problems completing the upgrade procedure.

To acquire all instrument operational data, perform the following:

1) Perform the System Checkout (section 2).

2) Back up the customer's configuration settings (Alter Main Menu data and Setup Menu data) to a diskette. (Use the Backup Configuration pad in Additional Setup.)

Hardware Installation

The following instructions provide procedures for Blue-Yellow hardware installation.

Color Wheel Installation

To install the color wheel, refer to Figure 1 and follow the guidelines given below.

CAUTION: *To avoid dropping any loose parts into the instrument during this procedure, spread a soft cloth beneath the color wheel to catch any parts that may drop. Spring tension created by the curvy washers on the color wheel shaft can cause the small hardware to fly off when the retaining ring is being removed or installed.*

NOTE: *Ensure that you are installing color wheel P/N 29979-3 (written on the color wheel). This color wheel is included in the Blue-Yellow upgrade kit.*

1) Remove the front and rear covers (section 3).

2) Remove the existing model 740i color wheel (section 3).

3) Install the new color wheel (refer to Figure 1).

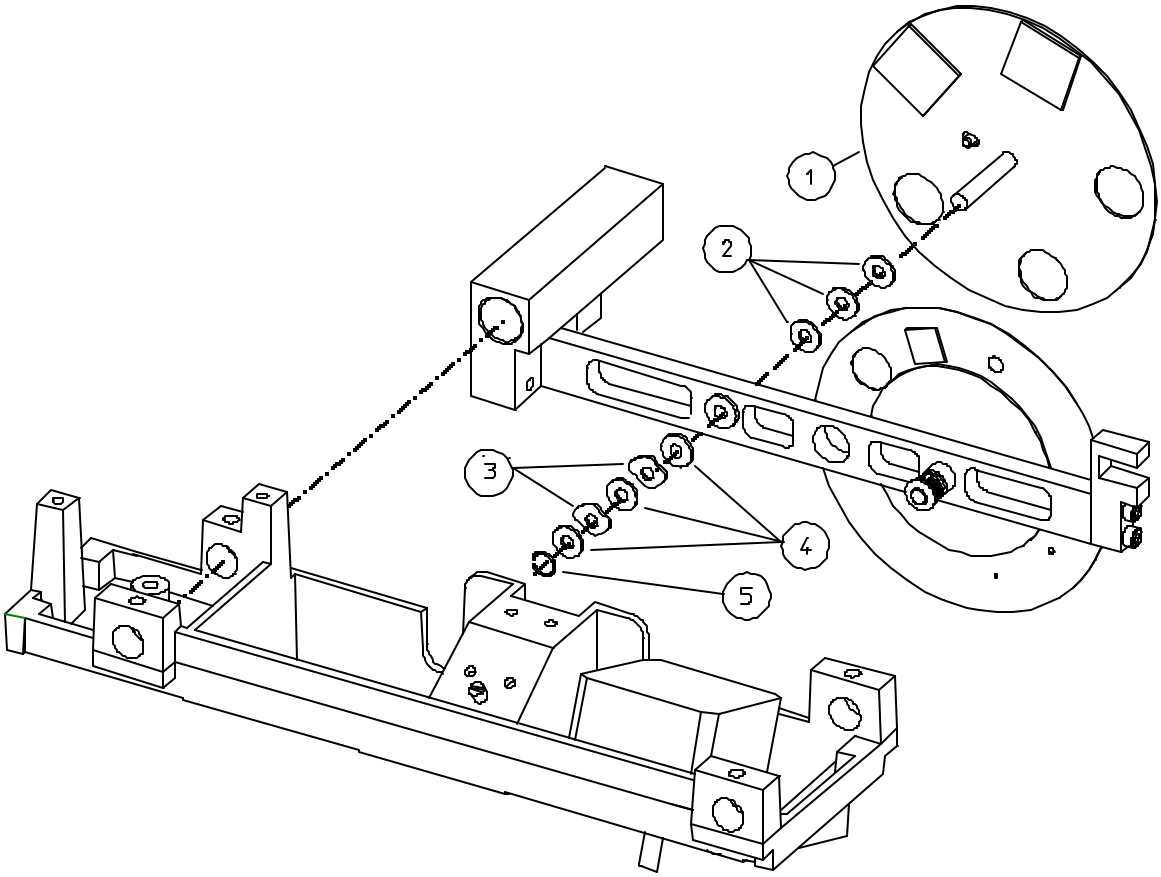

FIGURE 1. Color Wheel Installation

Item	Part No.	Qty	Description
1	29979-3 *	1	Color Wheel
2	07063	3	Washer, Flat, .223/.366/.031, Nylon
3	30031	2	Washer, Curvy, .200/.370/.006, SST
4	21517	3	Washer, Flat, .200/.359/.048, SST
5	06085	1	Ring, Retainer

* **Note:** Ensure that you are installing color wheel P/N 29979-3 (written on the color wheel).

Yellow Filter Assembly Installation

The Yellow Filter Assembly consists of a bracket, heat absorbing filter, diffuser, and — most importantly — a yellow filter. When illuminated with white light, this assembly provides the yellow bowl illumination.

To remove the bowl plug and install the Yellow Filter Assembly, refer to Figure 2 and follow the guidelines given below.

1) Slide the carriage assembly to the rear of the projection assembly (towards the projection lamp).

2) Pull tab on plug toward back of bowl to lift out the bowl plug from the top of the bowl.

3) Refer to Figure 2, and install the foam strip as shown. Wrap the foam strip around the filter block assembly.

NOTE: *When the foam strip is positioned properly, it should fit snugly against the bowl. It is essential that the fit tight enough to block light from passing between the filter block assembly and the bowl.*

4) Install the Yellow Filter Assembly. The Yellow Filter Assembly should come pre-assembled. If not, refer to Figure 2 for assembly.

PARTS LIST for Figure 2

Item	Part No.	Qty	Description
1	24489	1	Retainer, Filter
2	29956	1	Filter, Heat (Clear)
3	29958	1	Diffuser (White or Milky)
4	29957	1	Filter, Yellow
5	28293-8	1	Screw, M3 x 8
6	14446	1	Washer, Square Cone
7	28295-8	2	Screw, M4 x 8
8	14445	2	Washer, Square Cone
9	29738	2	Washer, Flat, .187/.750/.060, SST
10	29950	1	Bracket, Filter Mounting
11	01147	7"	Tape, Foam

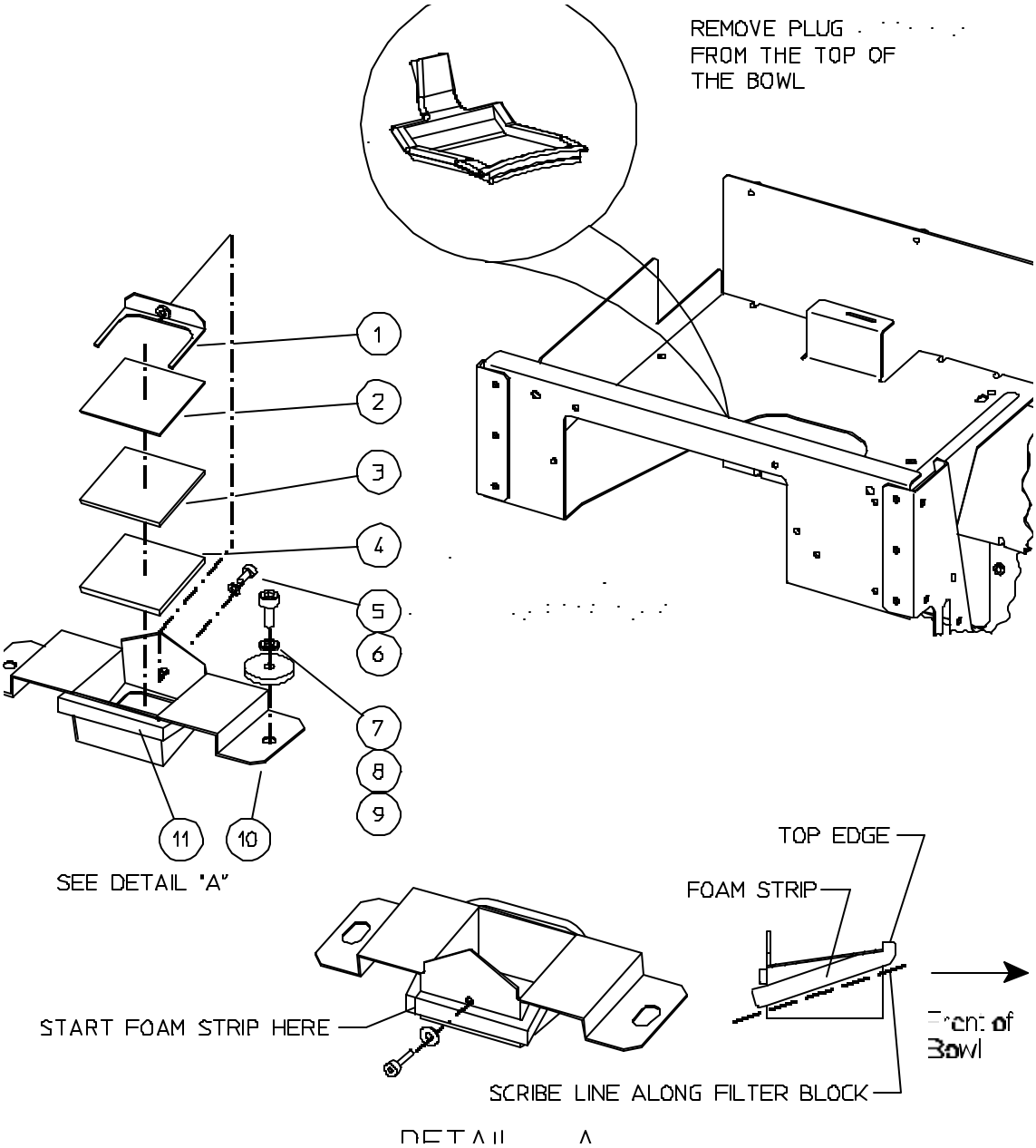

FIGURE 2. Yellow Filter Assembly Installation

Yellow Lamp Assembly Installation

The Yellow Lamp Assembly provides the white light needed to illuminate the yellow filter assembly.

1) To install the Yellow Lamp Assembly, refer to Figure 4. Plug the lamp assembly cable onto connector P4 on the Motor Driver PCB.

2) Remove the mounting bracket from the Yellow Lamp Assembly and attach it to the projector assembly above the upper lens. Mount the screws through the front of the projector assembly frame into the mounting bracket.

3) Attach the tie wrap mount to the spot indicated in Figure 4. Use the two tie wraps provided to attach the Yellow Lamp Assembly cable to the projector assembly as indicated. Make sure that you leave approximately six inches of cable between the tie wrap mount and the Yellow Lamp Assembly.

4) Attach the Yellow Lamp Assembly to the mounting bracket. Make sure that the opening in the Yellow Lamp Assembly lines up with the upper lens and that the cable is not blocking the light path. Adjust the lamp shield (Figure 3) so that it fits snugly against the Yellow Filter assembly and does not interfere with the operation of the color or aperture wheel assemblies.

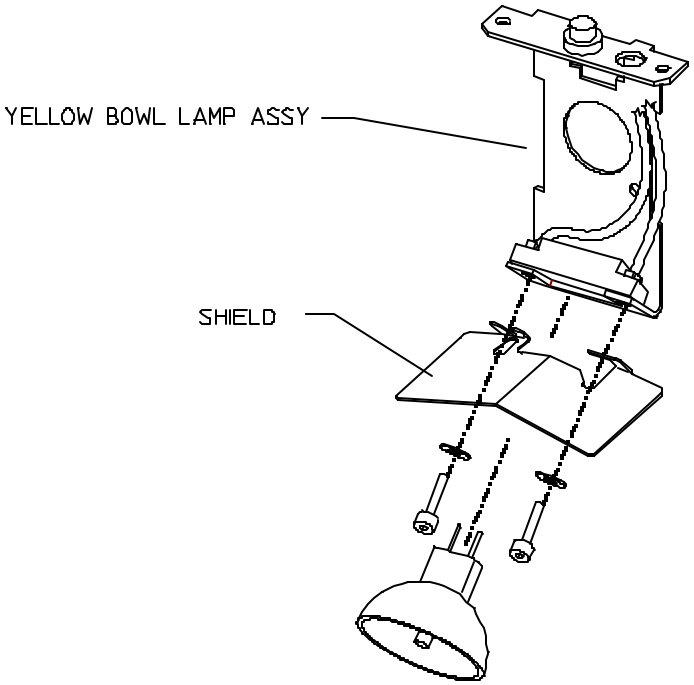

FIGURE 3. Yellow Lamp Shield

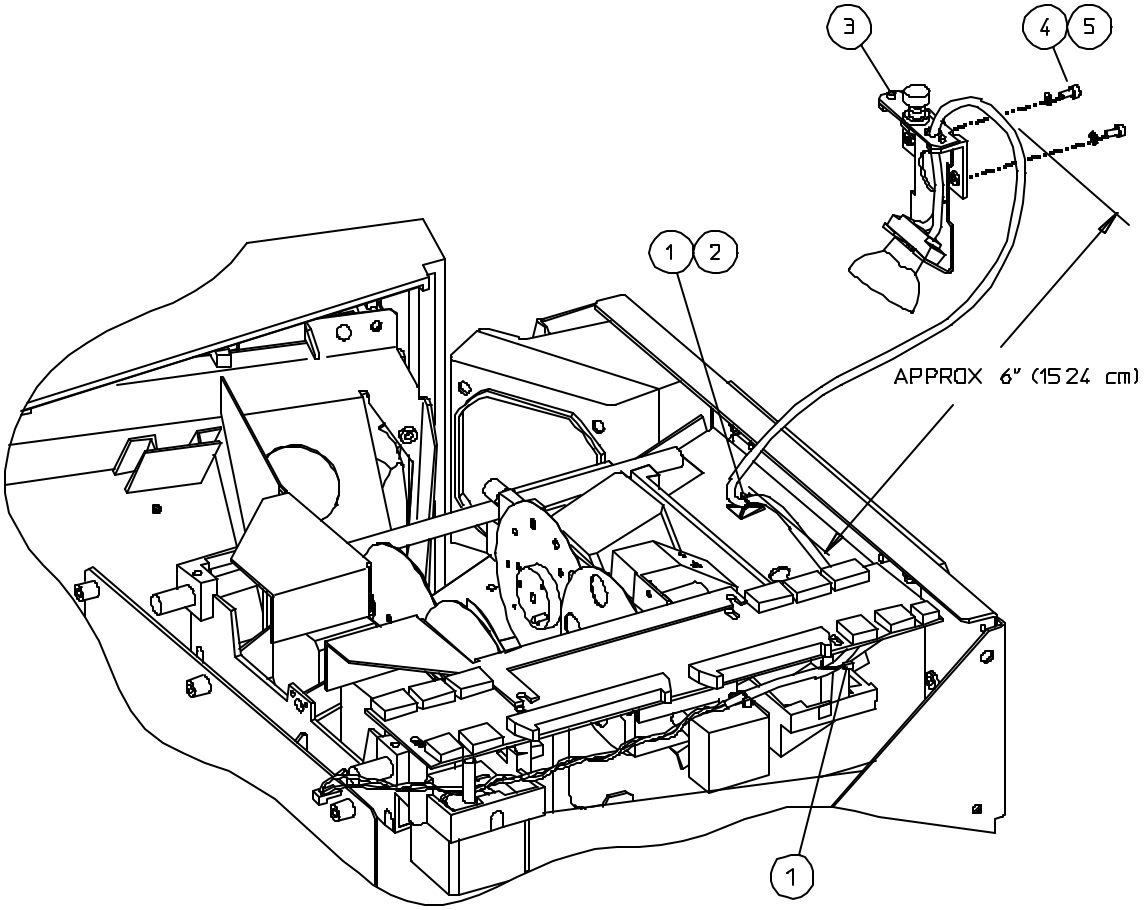

FIGURE 4. Yellow Lamp Assembly

Item	Part No.	Qty	Description
1	00673	2	Tie Wrap
2	01362	1	Mount, Tie Wrap
3	30071	1	Lamp, Yellow Lamp Assy
4	14446	2	Washer, Square Cone, .142/.307/.039
5	28293-8	2	Screw, M3 x 12, Soc. Hd., Cap

Forehead Rest and Visor Installation

The Installation of a Forehead Rest and Visor (shield) prevents patient visibility of the illuminated yellow filter assembly during Blue-Yellow testing. Without extending the visor during Blue-Yellow testing, a patient is more likely to be distracted by the bright yellow light at the top of the bowl, thus increasing fixation loss.

NOTE: *Prior to removing the forehead rest, set the chinrest and the forehead rest horizontal lead screw nuts both the same relative position (check for the same amount of thread showing on the same side of the lead screws).*

1) Remove the existing forehead rest from the instrument front cover (see Figure 5). If the existing forehead rest is in good condition, it can be reused, otherwise, use the new forehead rest. Install the forehead rest and visor as shown.

2) Don't forget to apply a small amount of grease (Rheolube 362, P/N 08780) to the visor as shown in Figure 5.

3) Once the new forehead rest has been installed, check that the center line on both the chinrest and forehead rest are properly aligned. (Refer to Figure 6.)

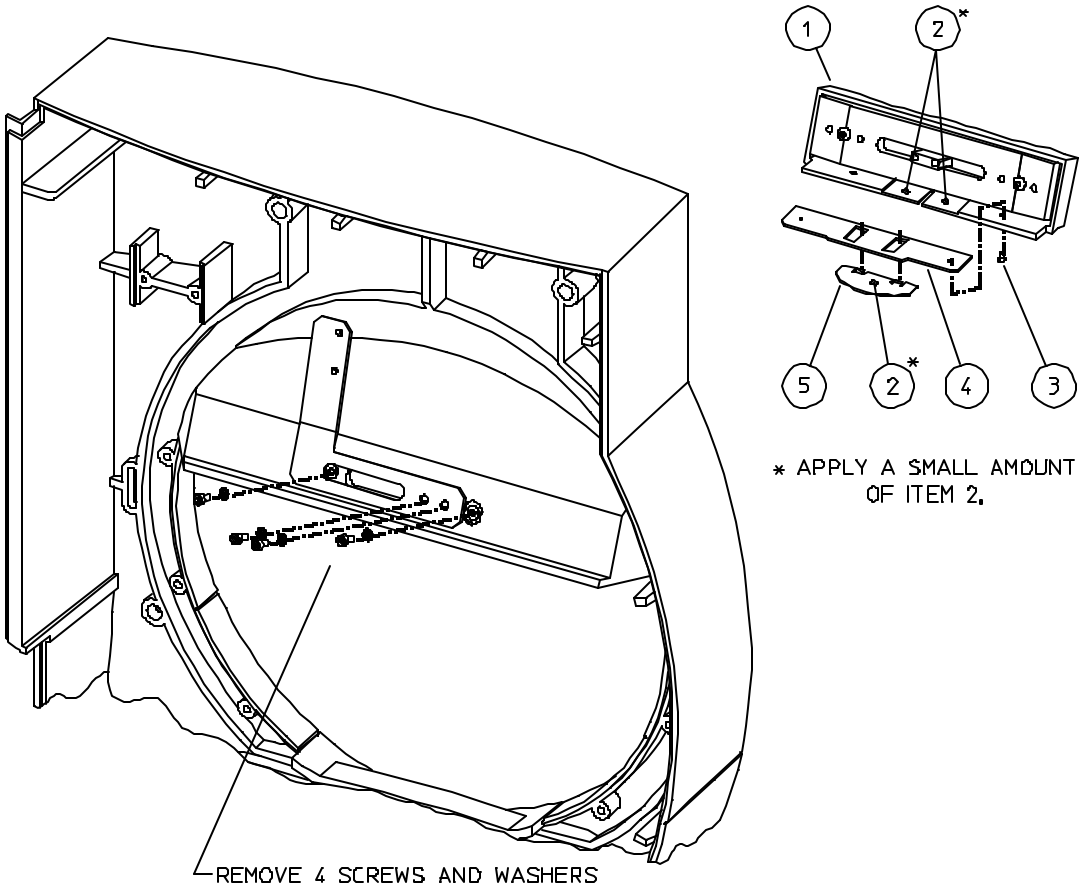

FIGURE 5. Forehead Rest and Visor (Shield) Installation

Item	Part No.	Qty	Description
1	30076	1	Forehead Rest
2	08780	N/A	Grease, Rheolube 362
3	22715	2	Screw, 2-56 x .188, SL
4	30068	1	Bracket, Visor
5	30069	1	Visor (Shield)

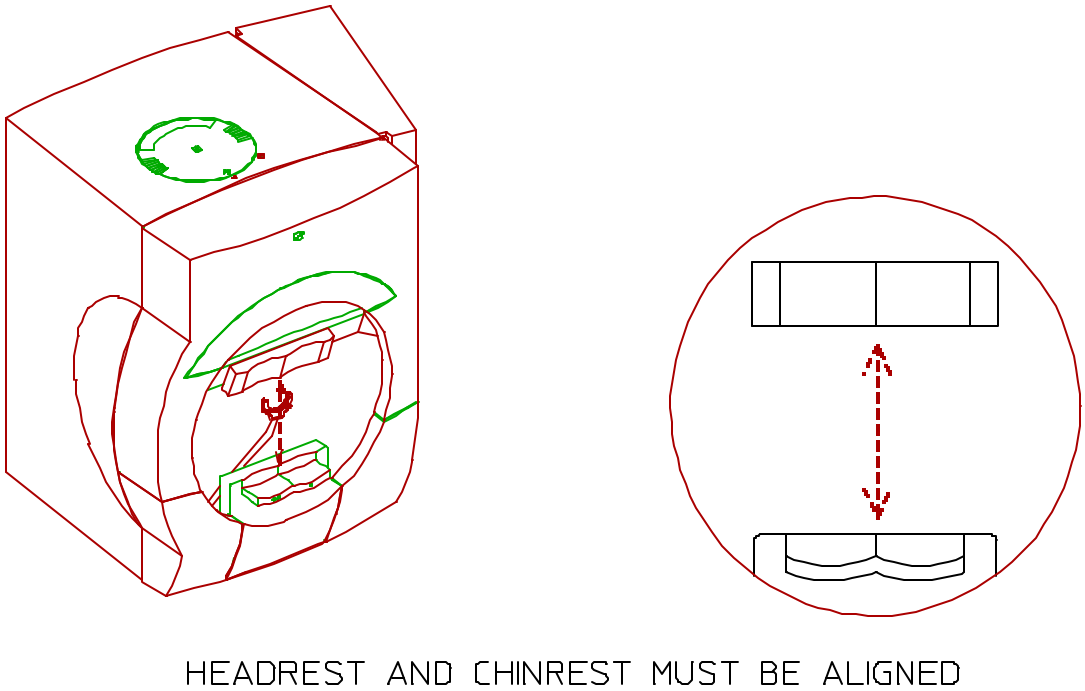

FIGURE 6. Chinrest and Forehead Rest Alignment Check

Setting the Hardware Options Number and the Software Options Number

1) Use the Diagnostic Support Tool (DST) diskette to set the Hardware Options number:

   From the DST Main Menu select Set Model/Hardware Options. Select Set Model 745i Defaults, a test log menu appears and displays the Model 745i default settings. Select Continue.

2) Load the current revision of HFA II-i System software included in the upgrade kit (refer to the Appendix section of the Service manual). Loading the software will set the software options number that is stored on the Hard Drive. This step must be done *AFTER* the hardware options number has been set.

3) Once the software is loaded (see Note below), proceed to the Setup menu and print out the system log. Verify that the correct hardware options number has been entered. (The hardware options number is displayed at the top of the printout, adjacent to the machine ID.)

NOTE: *The instrument will probably give an error during the power-up sequence. To bypass the error, select Proceed to get to the Main Menu. At the Main Menu, the Setup menu option can be selected. [When new hardwar installed (color wheel, yellow lamp assembly, etc.), an error will occur during the power-up sequence because the r hardware is not yet calibrated. This calibration will be performed in the next procedure.]*

4) Insert the configuration backup diskette in the floppy drive and select the Restore Configuration pad in Additional Setup. (Once complete, the printer selection and Alter

Main Menu data will automatically be saved on the hard disk drive.)

Recalibration Procedures

Perform the following recalibration procedures.

Color Wheel Calibration and Test

1) Calibrate the color wheel (refer to section 4).

2) Enter QA Tests. Run the 30/60 mixed tests for 5 minutes. No errors should be reported. Observe the color wheel for proper operation.

Light Intensity Calibrations

The addition of the new color wheel and the blue-yellow hardware requires recalibration of the light intensities. Refer to the HFA II-i Service Manual as required to complete the calibrations (section 4).

The light intensity calibrations MUST be performed in the order given below. Print both the HFA II-i White Light and Blue-Yellow Light Verification Data printouts.

1) White Projector Intensity Calibration
2) Blue Projector Intensity Calibration
3) White Bowl Intensity Calibration
4) Yellow Bowl Intensity Calibration
5) Wedge Calibration
6) Blue Correction Calibration
7) Intensity/Spot Ratio Verification

NOTE: *If the Wedge Calibration is changed after performing the Blue Correction Calibration, an error 130009 w occur during the power-up sequence. To correct this, perform the Blue Correction Calibration procedure once ago Again save calibration to the floppy calibration diskette.*

Operational Checks

To ensure that the upgraded features are accessible to the operator, perform the following operational checks.

For All Upgrades:

1) Proceed to a patient test.
2) Select Change Parameters.
3) Select Blue-Yellow ON.
4) Start a 30-2 test. Look into the bowl and ensure that a blue stimulus and yellow background illumination can be observed.
5) When the test is complete, save to both floppy and hard drive.
6) Proceed to File Functions.
7) Select View Test.
8) Select Hard Drive.
9) Recall the 30-2 Blue-Yellow test previously run.
10) Print out the test results.

Instrument Post-Checkout

Prior to completing the upgrade, it is essential that you perform an Instrument Post-Checkout. This will ensure that the instrument is in calibration and all features are operational.

1) To perform the Instrument Post-Checkout, perform the System Checkout (section 2.1).

Suggestions for Customer Training

1) Ensure that the customer has an understanding of the following instrument operations:

- How to access Change Parameters and select stimulus color changes.
- How to access Change Parameters and turn Blue-Yellow to ON.
- How to run a Blue-Yellow test.
- How to print out Blue-Yellow Statpac results.
- How to access the hard disk drive.
- How to copy files from the floppy disk drive to the hard disk drive.
- How to select patient files from the hard disk drive.

Reporting the Upgrade to Humphrey Systems

All upgrades performed to the HFA II-i must be reported to Humphrey Systems as described below.

WARNING: *Any unauthorized HFA II-i upgrades (those performed without notifying Humphrey Systems) will automatically be downgraded to the model and features that existed prior to the unauthorized upgrade, when a future revision of software is loaded into the instrument.*

1) Both U.S. Domestic and International (Affiliates and Distributors) must send a fax to Humphrey Technical Support (925-557-4652) containing the information itemized below ***(Note !*** *For your convenience, an appropriate fax form is included at the back of this bulletin).*

   a) Technician's name and Affiliate/Distributor home office fax number.
   b) The serial number of the HFA II-i that was upgraded.
   c) The customer's name and address.
   d) The type of upgrade performed (see HFA II-i Upgrade Types below).

   HFA II-i Upgrade Types:

   Only the upgrade covered in this service bulletin is listed below.

   740i-to-745i (includes Blue-Yellow) Upgrade

2) Once Technical Support receives this information, the Order Administration database will be updated to indicate the new instrument configuration. ***If the information is not received, any subsequent software revision upgrade on the instrument will cancel the authorized but unreported instrument upgrade, and a second service call will then be required to restore the instrument upgrade.***

Finishing Up

Return Paperwork

The following instructions apply to U.S. Domestic Service Representatives. However, it is

recommended that International Service Engineers return and file the same paperwork at their Affiliate or Distributor offices.

1) U.S. Domestic service technicians must include the following information with their completed Service Report Form:

   a) Service Report Form — include type of upgrade performed.
   b) HFA II-i - Field Light Intensity Data Worksheet
   c) Calibration Notice - yellow copy (if required)

facsimile

TRANSMITTAL

to: **HUMPHREY TECHNICAL SUPPORT**
fax #: 925-557-4652
re: HFA II-i Upgrade Notification
date:
pages: 1, including this cover sheet.

Technician's Name and Affiliate/Distributor Fax No. _____

Instrument Serial No. _____

Customer's Name and Address: _____

_____

_____

_____

Date Upgrade Performed: _____

Type of Upgrade Performed (circle):

- 740i-to-745i (includes Blue-Yellow) Upgrade

RGA No. (if applicable): _____

Comments: _____

_____

SERVICE BULLETIN

Instrument:	**Humphrey Field Analyzer II-i**	No.:	**FA2i-013A**
Subject:	**Printrex Printer With New Universal Power Supply**	Date:	**22 Jan 03**
Status:	**Informational**	Pages:	**4**

PROBLEM

The manufacturer of the Printrex printer has obsoleted the current models of the Printrex printer.

IDENTIFYING THE DIFFERENCES BETWEEN THE PRINTREX PRINTERS -

Three styles of Printrex printers have been released. Two of the three styles can be used by the HFA2i. Features that help identify the printer styles are depicted in Figures 1 and 2.

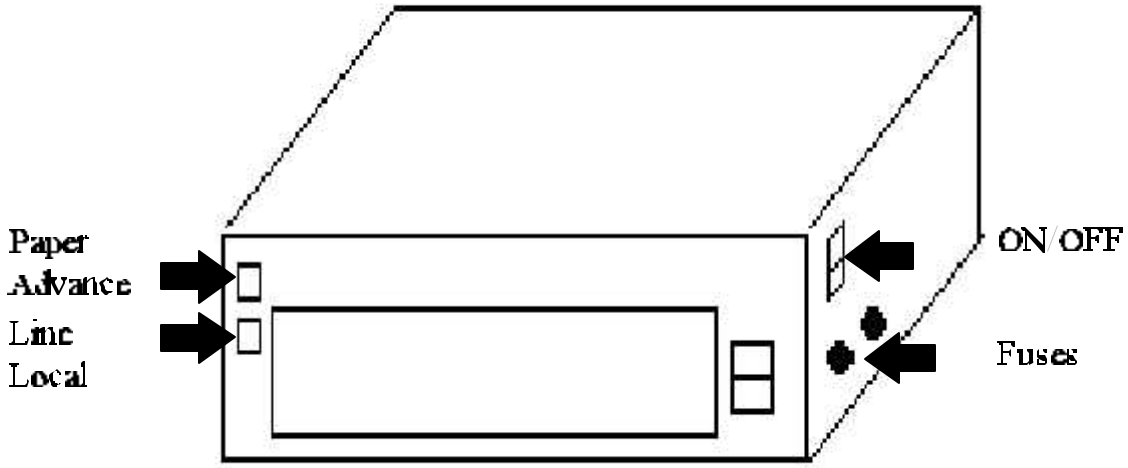

FIGURE 1. Style #1 P/N 40038-115 or 40038-230.

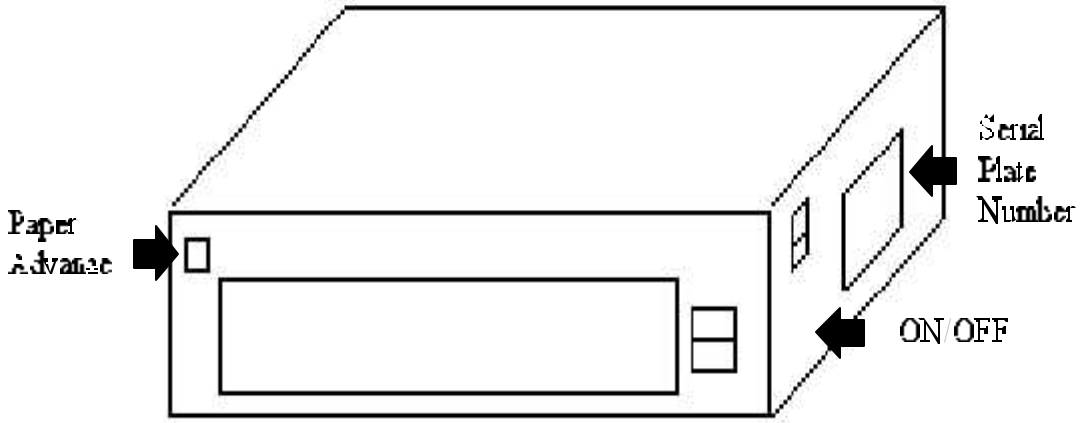

FIGURE 2. Style #2 P/N 54306.

SOLUTION

Orders for the HFA 2i power table with printer will now ship with the style #2 Printrex printer, as shown in figure 2. The style #2 Printrex printer (P/N 54306), with universal power supply, replaces style #1 single voltage Printrex printers currently used (P/N 40038-115) and (P/N 40038-230).

As the style #2 Printrex printer has a switching power supply, it can be used in a 100 VAC, 120 VAC, and 230 VAC environments on the HPT-300 and HPT-400 power tables. There is only one model and one part number for the style #2 printer. A self test feature has been built into the printer style 2 printers. See the troubleshooting section in this bulletin.

Part Number	**Description**
54306	Assy, Printer Printrex Universal Power

Only use the style #2 printer to replace style #2 printers. Continue to replace style #1 printers with style #1 printers.

TROUBLESHOOTING

Normally rebooting the printer and the HFA2i will restore printing operation. If rebooting does not restore normal printing, run the self test function. The self test function will often restore normal printing.
The self test may be run with or without the data cable connected to the HFA2i. To initiate the self test feature:

1) Set the printer ON/OFF switch to OFF.
2) Press in and hold the paper advance button.
3) Set the printer ON/OFF switch to ON.
4) Release the paper advance button.
5) The printer will produce a printout that includes:
   a) Model information
   b) Firmware version
   c) Head test
   d) Platen test
   e) Character sets
   f) Buffer information
   g) Analog input

Note *– Be sure to attempt the self test and retry printing prior to replacing a printer.*

Self Test Printout

The following page shows a sample self test printout.

```
-- MODEL INFORMATION --
   Humphrey Field Analyzer

-- FIRMWARE VERSIONS --
   CPU Firmware: P146-R03. 1219-0071 US P115
   Interface:    P147-R01. 1213 0045

-- INTERFACE TYPE
   Proprietary Parallel

-- HEAD TEST
```

```
-- PLATEN TEST --
```

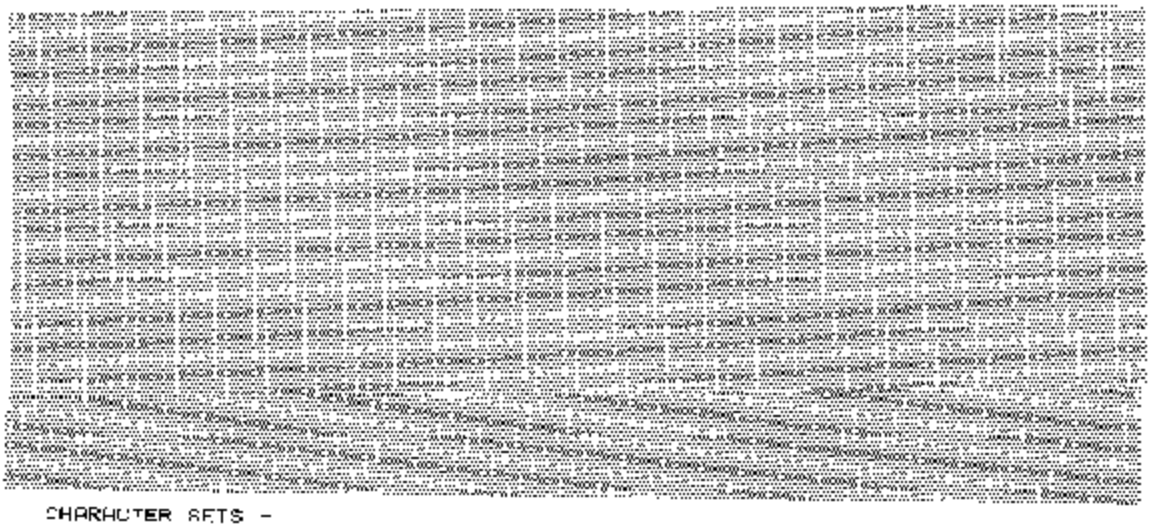

```
   CHARACTER SETS -

10 Pitch Humphrey Set
```

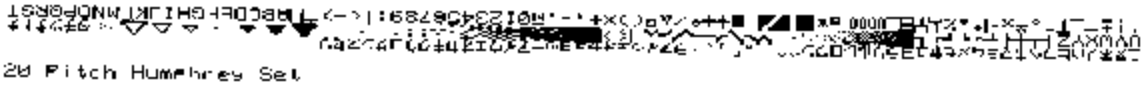

```
20 Pitch Humphrey Set
```

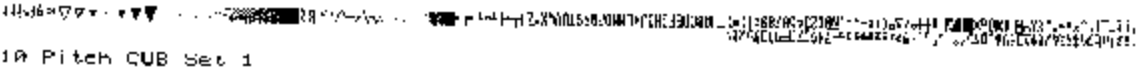

```
10 Pitch CUB Set 1
```

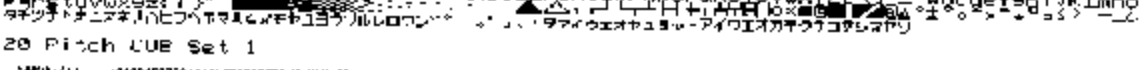

```
20 Pitch CUB Set 1
```

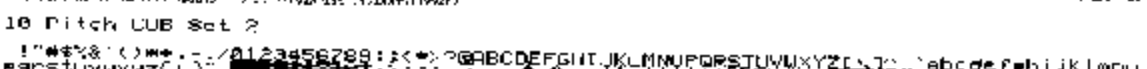

```
10 Pitch CUB Set 2
```

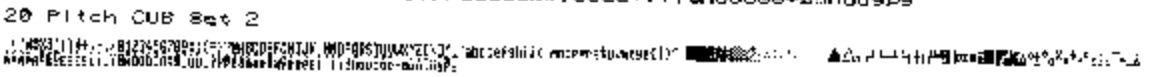

```
20 Pitch CUB Set 2
```

```
   BUFFER(S) --
   Input Buffer    1 Byte
   Raster Buffer   100 Raster Lines

   ANALOG INPUT TEST --
   Head Voltage        AD:    177    23.8V
   Temperature         AD:    150    23°C
   Head Calibration    AD:    209
   Paper Sensor        AD:      8

-- END OF SELF-TEST --
```

CARL ZEISS MEDITEC

SERVICE BULLETIN

Instrument:	**Humphrey Field Analyzer II-i**	No.:	**FA2i-014**
Subject:	**Correction of Focus Motor Errors**	Date:	**10 Oct 02**
Status:	**Informational**	Pages:	**1**

INTRODUCTION

Some HFA2i units may produce focus motor positioning errors on an infrequent basis. These errors will normally appear on the system log and can cause test failure. The following troubleshooting techniques are most often used to detect focus motor errors; the motor exerciser test, belt tension check, detector check, belt pulley check, and mechanical focus calibration.

PROBLEM

Use of the above mentioned techniques may not identify the problem source.

SOLUTION

Two more possibilities of focus motors have been discovered. The first, is glue on the projection assembly rails, and the other is excessive friction between the rails and the carriage assembly bushings.

Glue on the rails -

If a slight amount of adhesive sticks to the projection assembly guide rails, during the repair or assembly process, it may not initially cause problems, nor be noticed. Over time, the clock oil used to lubricate the rail/carriage assembly reacts with the adhesive and becomes sticky. The sticky oil and adhesive combination increases the friction between the projection rails and the focus motor carriage assembly. This combination can cause focus motor position errors. In a few cases, it has been found that the adhesive is located on the bottom side of the rails. More often, it will be on the rail that is closet to the color wheel. Typically it is found on the rail end closest to the patient.

One method to determine if the instrument has glue on the rails is to use a small mirror and place it so you can examine the rail bottoms. Another method is to loosen or remove the belt and move the carriage assembly by hand, feeling the resistance as the assembly moves on the rails. A change in resistance during carriage movement can indicate an adhesive deposit. The adhesive will appear as a brown-rusty colored patch. If you find a deposit on the rails, use acetone to dissolve the deposit and clean the rail. Replace the clock oil used to lubricate the rail after cleaning.

Excessive friction between the carriage and the rails -

Assuming you have examined the rails for adhesive and did not find deposits, the next most likely cause of the focus motor errors may be due to excessive friction between the rail and the internal bearings of the carriage assembly. To test for excessive friction, remove the belt and move the carriage assembly by hand. Ensure that the rails are well lubricated with clock oil. If an abnormal amount of force is required to move the carriage assembly along the rails, and the amount of force is relatively uniform throughout the range of travel, the friction between the rails may be due to misalignment, and could be the cause fo the focus motor errors. Do not attempt to repair the projection assembly rails and carriage. Order and replace the entire projection assembly.

ZEISS CARL ZEISS MEDITEC

SERVICE BULLETIN

Instrument:	**Humphrey Field Analyzer II-i**	No.:	**FA2i-015**
Subject:	**File/Name Notice**	Date:	**15 Jan 03**
Status:	**Informational**	Pages:	**4**

General Information

Two very infrequently encountered errors have been discovered that affect the Humphrey Field Analyzer HFA 2i models. These two errors have been given the names of the **File/Name** and the **Date/Time** errors. Corrective actions have been implemented in the latest HFA2i software release, revision 3.2 to address the errors. This software has been released with new HFA2i units.

A software kit (P/N 53787) that includes the 3.2 software application disks (P/N 54799) and a letter will be sent to all current HFA2i customers. The customer letter describes the nature of the errors and the corrective actions. A copy of the body of the text of the letter and enclosures follows this paragraph. If you have questions or if a customer asks you a question that you cannot answer, contact Carl Zeiss Meditec Inc at 877-486-7473.

IMPORTANT SOFTWARE UPDATE ENCLOSED

RE: Humphrey® Field Analyzer II - *i* series

Dear Carl Zeiss Meditec Customer,

As part of our ongoing efforts to ensure data file integrity, Carl Zeiss Meditec Inc. (formerly Carl Zeiss Ophthalmic Systems, Inc., Humphrey Division) has updated its software for your Humphrey Field Analyzer II - *i* series ("HFA II", Model 700 *i* - series). This software revision provides new features that reduce the likelihood of user error that could result in database corruption. The first item concerns "File/Name" association and the second item concerns "Date/Time" association. Both of these items are described in detail on the following pages and have been addressed with the enclosed system software revision 3.2.

The enclosed system software revision 3.2 includes updates that will prevent both the "File/Name" issue and the "Date/Time" issue from occurring in the future, provided that system software revision 3.2 is successfully installed on your HFA II - *i* series instrument.

Carl Zeiss Meditec is committed to providing our customers with the highest quality instruments. In keeping with this commitment, enclosed please find HFA II - *i* series System Software, Revision 3.2. As with all software upgrades, first back up your data and then install the new software. Please be aware that merely installing the new system software revision 3.2 will **not** correct the files of previously conducted tests. You must follow the steps as indicated in the "Action Required" section on the following pages to correct the files of previously conducted tests.

For further clarification, please contact Customer Service toll free at 877-486-7473. We appreciate your assistance.

Sincerely,
Jeff Durban
Product Manager

Enclosures

Item 1: "File/Name" Issue

If an operator fails to follow the user instructions, and under a highly specific set of unusual circumstances (further described below), then it is possible to have an incorrect patient name associated with a visual field test performed on the Humphrey Field Analyzer II - *i* series with system software revisions C2, C3, C3_MO or C3.1. For example, Patient A's name may be matched with Patient B's test if **all** of the following circumstances are met:

If, during the course of testing a patient on your HFA II- *i* series:
- the instrument encounters an error where the instrument did not restart,
- **and** the patient being tested is <u>not</u> the first patient of the day to be tested, (ie, Patient B)
- **and** you respond to the error message by selecting the "OK" button,
- **and** you then select the "Test Other Eye" button,

then the instrument will revert to displaying the name of the last patient who completed a visual field examination on the instrument (ie, Patient A).

If, after the above conditions occur, you do not observe the incorrect patient name displayed on the screen:
- **and** you elect to resume the examination,
- **and** the test is completed successfully,
- **and** you elect to save the test result,
- **and** you select "Yes" in response to the message presented on the screen asking you to confirm that the patient's name and date of birth are correct ["Do You Wish To Save This Test For": (ie, "Patient A")], failing to observe the incorrect patient name displayed,

<u>then</u> the file saved will have the incorrect patient's name recorded. Additionally, if you chose to print the visual field test results, the incorrect patient name would be printed on the visual field test results.

Action Required: Install system software revision 3.2; check and correct any suspect files.

If you should have any files where you suspect that the patient's visual field result is not properly associated with the patient's name, and if, after further investigation you determine that the file must be updated, you may correct the file by completing the following steps:

Main Menu>File Functions>Change Patient Data>One Test>Select the Source (Hard Drive, Floppy Drive)>Select Directory Order (Name, Date or Patient)> Proceed>Enter Name to Find>Enter>Select the patient from the file directory>Proceed>Edit Patient Information>Select Enter after each field is updated>Select Proceed. To exit the Change Patient Data screen, select the Main Menu icon.

Note: You may wish to reprint the visual field test results with the correct patient information recorded. Please be aware that merely installing the new system software revision 3.2 will **<u>not</u>**

correct the files of previously conducted tests. You must follow the steps as indicated in the "Action Required" section above to correct the files of previously conducted tests.

Suggested ways to examine your database for suspect files

You may wish to sort your file directory in alphabetical and/or chronological order and then review the directory for any suspect files. For instance, if Patient A has 2 files for one eye for a given test date (i.e., a right eye test plus two left eye tests) or if Patient B only has one file for a given test date, or if you know a given patient was examined on a particular date, but you cannot find a file under his/her name for that date - you may want to investigate further. You may sort your file directory by completing the following steps: Main Menu>File Functions>View Tests>Select the Source (Hard Drive, Floppy Drive)>Select Directory Order (Alphabetical or Chronological)>Proceed.

Item 2: "Date/Time" Issue

Again, under a highly specific set of unusual circumstances, it is possible to have an invalid test date associated with a patient's visual field test performed on the Humphrey Field Analyzer II - *i* series with system software revisions C2, C3 or C3_MO. In the event this occurs, no test date or an incorrect test date would be printed on the patient's visual field test results and it could calculate an invalid age for the patient tested. This does not affect tests transferred to an HFA II - *i* series instrument from an HFA II or an HFA I instrument.

The STATPAC™ analysis package compares a patient's visual field to a normative database of visual fields from similarly aged patients. If the instrument did not calculate the patient's age properly, the STATPAC analysis and printout could be incorrect.

Screening tests performed with the Test Mode set to "Age Corrected" could also be affected by the "Date/Time" issue. If the instrument did not calculate the patient's age properly, the hill of vision assigned to the patient (which is based on the patient's age) could be incorrect.

Action Required: Install system software revision 3.2; perform evaluation of test dates; correct files as needed. Repeat screening tests performed with the Age Corrected test mode.

In an effort to assist you in determining what files, if any, are affected by the date/time issue, the enclosed system software revision 3.2 contains a quick, easy-to-use utility called "Evaluate Test Dates". You may use this utility to evaluate your HFA II - *i* series database contained on a floppy disk and/or a hard drive.

Upon performing this evaluation, a printout will be automatically generated that displays a summary of its findings. The printed summary will contain information such as the number of files examined, the number of HFA II - *i* series files, and the number of files flagged, if any, that are considered to have "Questionable Test Dates". The files with "Questionable Test Dates" are those that may have been affected by the "Date/Time" issue.

If any files are flagged, a printed file directory will display the details of each questionable file (patient's name, patient's date-of-birth, eye tested, test type, test time, and test date) so that you may review the file. The printed summary will also contain directions on how to update the date on the file, if needed. The average time to complete the evaluation is less than 7 minutes.

Instructions on how to evaluate test dates

Main Menu>System Setup>Additional Setup>Diagnostics>Enter password 1234>Evaluate Test Dates> Select the Source (Hard Drive or Floppy). After reviewing the confirming message, if you still wish to perform the evaluation, select "Yes". If you do not want to perform the evaluation at this time, select "Cancel".

Note: You may wish to reprint the visual field test results with the correct test date recorded. Please be aware that merely installing the new system software revision 3.2 will **not** correct the files of previously conducted tests. You must follow the steps as indicated in the "Action Required" section above to correct the files of previously conducted tests.

Note: New Feature in Software Revision 3.2 - Internal Self-Test for Date Checking

System software revision 3.2 includes an automatic self-test for date validation. Although the new self-test is set up to run unnoticed in the background, you may see a pop-up window that displays the message: "Please verify that today's date is shown correctly below" along with the date the instrument is set to. If you receive this message and the date displayed is correct, press "Yes". If the date is incorrect, press "No"; input the appropriate date at the pop up menu, then select "Enter".

CARL ZEISS MEDITEC

SERVICE BULLETIN

Instrument:	**Humphrey Field Analyzer II-i**	No.:	**FA2i-016F**
Subject:	**Compatible External Printers List**	Date:	**3 Aug 06**
Status:	**Informational**	Pages:	**1**

This bulletin replaces Service Bulletin FA2i-016E

General Information

The printers listed below are approved for the HFA II-i.

Note: *All printers must be used in conjunction with an isolation transformer or the printer must be placed outside of the patient environment. The printers cannot be used in conjunction with a power strip or extension cord.*

Hewlett Packard LaserJet 1100 SE
Hewlett Packard LaserJet 1160 *
Hewlett Packard LaserJet 1200
Hewlett Packard LaserJet 1300
Hewlett Packard LaserJet 1320 – 220 volt version
Hewlett Packard LaserJet 3200
Lexmark E 312 L
Lexmark E 320
Lexmark E 321 *
Lexmark E 232 *
Brothers HL- 5040
Brothers HL-5050
Brothers HL-5140 *
Brothers HL-5240 *
Brothers HL-2700CN *
OKI B4250 *

**** These printers are not qualified for 220 volt operation.***

Printers must be used with a printer cable that meets the IEEE 1284 requirement. CZMI stocks and sells a printer cable for the HFA II-i that meets the cable requirement. The part number for the HFA II-i printer cable is P/N 51472.

CZMI does not sell or supply the above-mentioned external printers to customers, affiliates or distributors. All warranty claims for external printers must be handled through the seller or manufacturer of the printer.

CZMI will provide limited technical support for approved printers operating with the HFA II-i. The nature of this support will be limited to determining if the HFA II-i instrument is correctly configured for the external printer, and that the instrument is correctly connected to the printer.

Should a customer choose to use a printer other than one of the approved printers, they do so at their own risk.

CARL ZEISS MEDITEC

SERVICE BULLETIN

Instrument:	**Humphrey Field Analyzer II-i**	No.:	**FA2i-017E**
Subject:	**New CPU and BIOS**	Date:	**12 Apr 04**
Status:	**Informational**	Pages:	**5**

This bulletin replaces Service Bulletin FA2i-017D

General Information

This service bulletin provides information on the release of a new BIOS program, a new CPU P/N, new application software, and a new DST Disk.

Changes to BIOS, CPU, Application Software and DST Software

The BIOS chip used on CPU P/N 51477 is no longer available. The new BIOS chip required changes to the BIOS programming, resulting in a new BIOS settings disk P/N 56280. The CMOS password remains unchanged. BIOS Ver. 2.0 contains a new Flash Utility (8.53) and will now overwrite the old BIOS.

In some instances, use of the BIOS disk Ver. 2.0 will result in failure. An “Interrupt Divide By Zero “ error will be displayed. To overcome this problem you must enter the BIOS utility and proceed to the PERIPHREAL SETUP menu. The last item on the menu ON-BOARD IDE must be set to DISABLE. Save and exit the BIOS. Run the BIOS Ver. 2.0 loading utility P/N 56280. The BIOS loader will set all BIOS settings to the correct choices.

BIOS related changes also required a change to P/N 51477 CPU. The currently used HFA2i CPU board P/N 55392 will have the new BIOS chip and BIOS programming installed.

With changes to the BIOS code and CPU, extraneous characters or mysterious screen selections may appear while using the revision 3.2 or lower revision application software or the DST. To correct this problem, the 3.4 revision of HFA 2i software (P/N 55727) and DST P/N 55744 were created. See service bulletin HFA2i-005D for more information concerning the software changes. The compatibility matrix is shown in Table 1.

Table 1. BIOS, CPU, and Software Revisions Compatibility Matrix

OLD BIOS	OLD CPU	OLD SOFTWARE	OLD OR NEW DST
P/N 52847	**P/N 51477**	**Rev 3.2**	**Rev C3.1 or greater**

OLD BIOS	OLD CPU	NEW SOFTWARE	OLD OR NEW DST
P/N 52847	**P/N 51477**	**Rev 3.4 or greater**	**Rev C3.1 or greater**

NEW BIOS	OLD CPU	NEW SOFTWARE	NEW DST
P/N 56280 Ver. 2.0	**P/N 51477**	**Rev 3.4 or greater**	**Rev 3.4 or greater**

NEW BIOS	NEW CPU	NEW SOFTWARE	NEW DST
P/N 56280 Ver. 2.0	**P/N 55392**	**Rev 3.4 or greater**	**Rev 3.4 or greater**

Note: Software revisions ≥ 3.4 are compatible with all CPU/BIOS combinations.

The new CPU, BIOS (Ver. 1.03B) and application software Revision 3.4 were installed on the HFA2i beginning with the starting serial numbers:

720i-5812 **740i-11330** **745i-4546** **750i-9376**

SBEP 103B BIOS Loading Instructions

1) Power on the HFA2i . Tap the Delete key during the boot up.
2) At the Enter CURRENT Password screen, enter the CMOS password.
3) At the AMI BIOS screen, use the down arrow key to select Advanced CMOS Settings.
4) Press the Enter key to enter the Advanced CMOS Settings.
5) Use the down arrow key to select 1st Boot Device.
6) Use the PG DN key to select Floppy.
7) Press the ESC key to return to the AMI BIOS Main screen.
8) Press the F-10 key to save and exit the BIOS utility.
9) Press the Enter key to exit the BIOS utility and save the settings.
10) Insert the SBEP 103B Bios Diskette in the floppy drive.
11) The HFA 2i will boot from the floppy disk. You will see nearly a page of text created by the SBEP 103B diskette followed by a row of dots that progress across the screen.
12) Next, you will momentarily see the HFA2i splash screen. It will be replaced with text.
13) Press the F-2 key to 'load default values'. The BIOS update is automatic, instrument will reboot.
14) Enter the COMOS password at the Enter CURRENT Password prompt.
15) Remove the SBEP 103B diskette from the drive.
16) The HFA2i will boot to the normal start up screen.
17) You can verify that the SBEP 103B BIOS settings have been loaded correctly by reentering the BIOS utility and checking the current settings with those that follow.

SBEP103B BIOS Settings

The settings below are those that will be set with the SBEP103B BIOS.

Standard CMOS Setup

Floppy Drive A	1.44 MB 3 1/2		
Floppy Drive B	Not installed		
Pri Master	Auto	32 Bit Mode	On
Pri Slave	Auto	32 Bit Mode	On
Sec Master	Not Installed		
Sec Slave	Not Installed		
Boot Sector Virus Protection	Disabled		

Advanced CMOS SETUP

Quick Boot	Enabled
1st Boot Devise	IDE-0
2nd Boot Devise	Floppy
3rd Boot Devise	IDE-1
4th Boot Devise	Disabled
Try other Boot Devices	Yes
Initial Display Mode	Silent
Display Mode at Add-On-ROM Init	Keep Current
S.M.A.R.T. for Hard Disks	Enabled
BootUp Num-lock	Off
Floppy Drive Swap	Enabled
PS/2 Mouse Support	Enabled
System Keyboard	Absent
Primary Display	VGA/EGA
Password Check	Setup
Boot to OS/2 > 64MB	No
CPU Serial Number	Disabled
L1 Cache	Writeback
L2 Cache	Writeback
System BIOS Cacheable	Enabled
C000,64K Shadow	Cached
D000,64K Shadow	Disabled

Advanced ChipSet Setup

USB Function	Enabled
USB Keyboard Legacy Support	Incl. Mouse
DRAM Page Closing Policy	Closed
DRAM Tras/Trc Cycle time	5/7
Address Setup Time (SCLKs)	1
CAS# latency (SCLKs)	3
SDRAM RAS# to CAS# delay	2
SDRAM RAS# Precharge	2
Graphics Mode Select	UMA 1MB
Display Cache Window Size	64MB
ICH Delayed Transaction	Enabled
C1kGen Spread Spectrum	Disabled
Local Memory Frequency	100 MHz
**** Display Cache Function ****	
Initialize Display Cache Memory	Disabled
Paging Mode Control	Open
RAS-to-CAS	Default
CAS Latency	Slow

RAS Timing	Slow
RAS Precharge Timing	Slow
Watch Dog Timer Control	Disabled
Watch Dog Timer Setting	8 sec.
CMOS RAM CLEAR FUNCTION	Enabled

Power Management Set-up

ACPI Aware O/S	No
ACPI Standby State	S1/POS
Power Management /APM	Disabled
Video Power Down Mode	Disabled
Hard Disk Power Down Mode	Disabled
Standby Time Out (Minute)	(N/A)
Suspend Time Out (Minute)	(N/A)
Throttle Slow Clock Ratio	50.0%
Keyboard & PS/2 Mouse Access	Monitor
FDC/LPT/COM Ports Access	Monitor
Primary Master IDE Access	Monitor
Primary Slave IDE Access	Ignore
Secondary Master IDE Access	Ignore
Secondary Slave IDE Access	Ignore
PIRQ [A] IRQ Active	Ignore
PIRQ [B] IRQ Active	Ignore
PIRQ [C] IRQ Active	Ignore
PIRQ [D] IRQ Active	Ignore
Power Button Function	On/Off
Resume On Ring	Disabled
Resume On PME	Disabled
Resume On RTC Alarm	Disabled
RTC Alarm Date	15
RTC Alarm Hour	12
RTC Alarm Minute	30
RTC Alarm Second	30

Plug and Play Setup

Plug and Play Aware O/S	No
Clear NVRAM	No
PCI Latency Timer (PCI Clocks)	64
Primary Graphics Adapter	Add-on VGA
PCI VGA Palette Snoop	Disabled
PCI IDE BusMaster	Disabled
PCI Slot1 IRQ Priority	Auto
PCI Slot2 IRQ Priority	Auto
PCI Slot3 IRQ Priority	Auto

PCI Slot4 IRQ Priority	Auto
DMA Channel 0	PnP
DMA Channel 1	PnP
DMA Channel 3	PnP
DMA Channel 5	PnP
DMA Channel 6	PnP
DMA Channel 7	PnP
IRQ 3	PCI/PnP
IRQ 4	PCI/PnP
IRQ 5	ISA/ESIA
IRQ 7	PCI/PnP
IRQ 9	PCI/PnP
IRQ 10	PCI/PnP
IRQ 11	ISA/ESIA
IRQ 14	PCI/PnP
IRQ 15	PCI/PnP

Peripheral Setup

OnBoard FDC	Enabled
OnBoard Serial Port A	3F8/COM1
OnBoard Serial Port B	2F8/COM2
OnBoard Parallel Port	3BC
Parallel Port Mode	Normal
EPP Version	N/A
Parallel Port IRQ	7
Parallel Port DMA Channel	N/A
Keybord PowerOn Function	Disabled
Specific Key for PowerOn	N/A
Mouse PowerOn Function	Disabled
OnBoard IDE	Primary

CARL ZEISS MEDITEC

SERVICE BULLETIN

Instrument:	**Humphrey Field Analyzer II-i**	No.:	**FA2i-018**
Subject:	**Power Supply FET Failure**	Date:	**9 May 03**
Status:	**Informational**	Pages:	**1**

Problem

The FETs (power transistors) in some HFA II-i power supplies may fail prematurely.

Cause

Fluctuations in the line voltage of the instrument, that exceed specified levels, may cause degradation of the FETs.

Solution

To prevent this from happening, the power supply vendor has increased the rating of the affected FETs from 400V to 500V. We have also implemented new power supply testing procedures on the production line.

The serial number ranges, of instruments that may be affected, are listed below. Not all instruments within the serial number range will be affected.

720i-5454 to 720i-5553
740i-10348 to 740i-10870
745i-4380 to 745i-4433
750i-8903 to 750i-9113

Power supplies should only be replaced on failure. Credit will only be given for failed power supplies, which have been returned to CZMI for inspection.

CARL ZEISS MEDITEC

SERVICE BULLETIN

Instrument:	**Humphrey Field Analyzer II-i**	No.:	**FA2i-019**
Subject:	**CPU Battery Failure**	Date:	**20 Jun 03**
Status:	**Informational**	Pages:	**1**

Problem

The battery in some HFA II-i computer assemblies may fail prematurely, causing the BIOS settings to be lost. The instrument may also experience loss of Date and Time settings.

Cause

The CPU battery circuit may discharge the battery faster than normal. This may prevent the battery from maintaining the proper charge, resulting in the above stated problems.

Solution

The CPU vendor has improved the battery circuit. We have also implemented new testing procedures on the production line.

If the instrument loses the BIOS settings, or is losing date and time, the voltage of the battery should be tested. If the battery voltage is less than 3.0 volts, then the CPU/Backplane enclosure should be replaced.

Note: *If the battery voltage is less than 3.0 Volts, and the battery has been in the system for three or more years, you should replace only the battery.*

The serial number ranges, of instruments that may be affected, are listed below. Not all instruments within the serial number range will be affected.

720i-5020 to 720i-5061
740i-7020 to 740i-7204
750i-8011 to 750i-8171

The CPU/Backplane enclosure should only be replaced on failure. Credit will only be given for failed enclosures, which have been returned to CZMI for inspection. The entire CPU/Backplane Enclosure must be returned (see service bulletin FA2i-011).

CARL ZEISS MEDITEC

SERVICE BULLETIN

Instrument:	**Humphrey Field Analyzer II-i**	No.:	**FA2i-020**
Subject:	**Change in Carriage Bearing Assemby**	Date:	**7 Jun 03**
Status:	**Informational**	Pages:	**1**

Problem

HFA2i instruments have displayed ***"focus motor errors"*** and ***"check shutter, motors and lamps error"*** messages.

Cause

One possible cause for the ***"focus motor errors"*** and ***"check shutter, motors and lamps error"*** messages has been found to be a variation in the assembly techniques while gluing the bearings in the carriage assembly. Variations in technique have resulted in misalignment of the bearings or excessive glue, which drips on the bearing shafts. Both causes can result in the carriage not moving or not moving smoothly (See service bulletin FA2i-014 for details).

Solution

Changes have been made to the manufacturing process that no longer requires the glue within the carriage housing. The new method involves press fitting the bearings into the carriage housing.

Instruments that have been manufactured with press fit bearings start with the following serial numbers:

720i-5724 **740i-11085** **745i-4513** **750i-9231**

CARL ZEISS MEDITEC

SERVICE BULLETIN

Instrument:	**Humphrey Field Analyzer II-i**	No.:	**FA2i-021**
Subject:	**Change in Rear Cover and Rear Shield Design**	Date:	**13 Jun 03**
Status:	**Informational**	Pages:	**1**

Problem

The old rear cover (P/N 51114) has been modified to enhance the fit of the cover, eliminating gaps between covers. This change required a modification to the rear shield (P/N 51070).

The new rear cover (P/N 55995) will not fit properly on an old style instrument, unless the rear shield (P/N 51070) is also changed.

Solution

The new rear cover will fit properly on an old style instrument after changing the rear shield to the new 51070 rev B shield. It is also advisable to order a new connection diagram label (P/N 51674) to place on the rear shield, rather than trying to remove the label from the old shield.

Instruments that have been manufactured with the new rear cover and new shield start with following serial numbers:

720i-5836 **740i-11430** **745i-4562** **750i-9421**

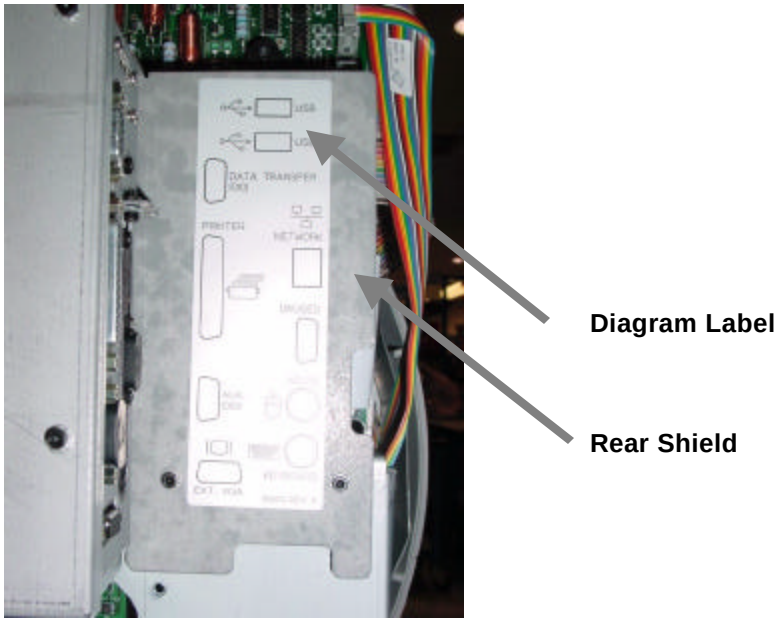

Figure 1. Rear Shield with Diagram Label.

CARL ZEISS MEDITEC

SERVICE BULLETIN

Instrument:	**Humphrey Field Analyzer II-i**	No.:	**FA2i-022**
Subject:	**Start up Problems**	Date:	**24 Jun 03**
Status:	**Next Visit**	Pages:	**1**

Problem

HFA2i instruments with the new CPU (P/N 55392), using application revision 3.4 software, may fail to reach the main menu on startup. The display will be blank and the instrument will give no indication that a failure has occurred.

Cause

Failures in the initialization of the RAM disk are one possible source for the blank display on startup.

Solution

Changes have been made to the application software in release 3.4.5. Load the application software revision 3.4.5 to install the new RAM disk initialization routine and eliminate the start up problem. If the software upgrade does not correct the start up problem, use the techniques found in the HFA2i service manual to troubleshoot and repair the unit.

Instruments that have been manufactured with the new CPU and software revision 3.4, and require the 3.4.5 software, are in the following serial number ranges:

720i-5815 through 720i-5838

740i-11330 through 740i-11446

745i-4546 through 745i-4559

750i-9376 through 750i-9393

CARL ZEISS MEDITEC

SERVICE BULLETIN

Instrument:	**Humphrey Field Analyzer II-i**	No.:	**FA2i-023**
Subject:	**Calibration Backup Disk Problems**	Date:	**21 Jul 03**
Status:	**Next Visit**	Pages:	**3**

Problem

Some HFA2i Calibration Backup Disks may contain corrupted data in the **calcfg.ini** or **nvram.dat** file**.** If a corrupted calibration disk is used to restore the calibration information, a complete loss of model, serial number, hardware option codes, software option codes, and all calibration data may result.

Cause

At this time the principle cause of the corruption to the Calibration Backup Disk **calcfg.ini** file is not known.

Solution

To prevent loading corrupted calibration files during the calibration restore process, the files on the calibration disk will need to be evaluated. A binary content viewer is used (as described below) to evaluate the calibration backup files. If the calibration backup disk files are corrupted, the files are to be recreated with the HFA2i calibration files save utility. After creating the new files, evaluate them to see that they are normal.

During the manufacturing process of the instrument an evaluation of the calibration disk files is performed, similar to the evaluation process described in this bulletin. Manufacturing Implementation dates for the verification of the calibration backup disk are found within this bulletin.

Binary Content Viewer

A computer utility program called a binary content viewer will allow the service engineer to look at the binary calibration files, and see the corresponding hexidecimal and ASCI code representation. Running the binary viewer program, the engineer can then evaluate the calibration files for corruption.

One binary content viewer program is **HexDump32**©, developed by Salty Brine Software, can be down loaded from www.saltybrine.com. Hexdump32.zip is a 1.6 mb Zip file and will not fit on a single 3.5" 1.44 mb floppy disk.

Hexdump32 is a freeware program that can be downloaded, used and distributed freely.

Downloading Hexdump32.zip

1. Download the hexdump32.zip file to your desktop or a file folder on your hard drive from the www.saltybrine.com website.
2. Using an unzip utility, extract the **setup.exe** file.
3. Accept all the default settings during the installation.
4. The Hexdump32 application is now installed on your system and is ready for use.

Verification of Calibration Backup Disk

1. Remove Calibration Backup Disk from the pocket inside the cable cover housing on the HFA2i.
2. From the Windows desktop of your computer, select the **Programs** group.
3. Start **Hex Dump32**.
4. Maximize the window and insert the Calibration Backup Disk into drive A.
5. Click on **File**, and then click **Open File**. If required, navigate to the "A" drive.
6. Double click on **Calcfg.ini** file.
7. Evaluate the characters on the right (ASCII) side of the screen. Determine if the file is normal or corrupted:

Normal Calcfg.ini file: Random characters should be displayed and the instrument model number will be visible as seen in Table 1.

Corrupted Calcfg.ini file: Values displayed on the right side of the screen show "……." On the left side of the screen Hex values will display "7F7F", as seen in Table 2.

8. Go to **File** and click **Close**.
9. Click on **File**, and then click **Open**. (If required navigate to the "A" drive)
10. Double click on **nvram.dat** file.
11. Evaluate the characters on the right side of the screen.

Normal nvram.dat file: Random characters should be displayed.

Corrupted nvram.dat file: Values displayed on the right side of the screen show "……." On the left side of the screen Hex values will display "7F7F", similar to Table 2.

12. Go to **File** and click **Exit**.
13. Remove the calibration disk from Computer.
14. If the disk is corrupted, see instructions to repair the corrupted calibration disk below.
15. If the disk has been determined to be normal, write your initials and date on the label.
16. Return the calibration disk to the holder in the cable compartment of the instrument.

```
00000000  01 02 00 00 00 00 00 00-00 00 00 00 00 00 00 00  ................
00000010  00 00 00 00 00 00 00 00-00 00 00 00 00 7D 00 80  .............}..
00000020  FF FF FF FF FF FF FF FF-FF FF FF FF 0F 00 00 00  ................
00000030  00 00 00 00 00 00 00 00-00 00 00 00 00 00 00 00  ................
00000040  00 00 00 00 00 00 00 00-00 00 00 00 00 00 00 00  ................
00000050  00 00 00 00 00 00 00 00-00 00 00 00 00 00 00 00  ................
00000060  00 37 35 30 69 00 00 00-EE 02 00 00 4E 1B 00 00  .750i.......N...
00000070  2D A9 30 17 00 00 00 00-00 00 00 00 00 00 03 82  -.0.............
00000080  00 00 00 00 00 34 01 B3-00 8C C7 40 D0 B7 DC 2C  .....4.....@...,
00000090  B0 CC 69 00 18 01 22 00-00 00 00 00 00 02 04 D0  ..i..."........
```

Model Number

Table 1. Normal Calcfg.ini File Example

```
00000000  7F 7F 7F 7F 7F 7F 7F 7F-7F 7F 7F 7F 7F 7F 7F 7F  ................
00000010  7F 7F 7F 7F 7F 7F 7F 7F-7F 7F 7F 7F 7F 7F 7F 9F  ................
00000020  7F 7F 7F 7F 7F 7F 7F 7F-7F 7F 7F 7F 7F 7F 7F 7F  ................
00000030  7F 7F 7F 7F 7F 7F 7F 7F-7F 7F 7F 7F 7F 7F 7F 9F  ................
00000040  7F 7F 7F 7F 7F 7F 7F 7F-7F 7F 7F 7F 7F 7F 7F 7F  ................
00000050  7F 7F 7F 7F 7F 7F 7F 7F-7F 7F 7F 7F 7F 7F 7F 9F  ................
00000060  7F 7F 7F 7F 7F 7F 7F 7F-7F 7F 7F 7F 7F 7F 7F 7F  ................
00000070  7F 7F 7F 7F 7F 7F 7F 7F-7F 7F 7F 7F 7F 7F 7F 9F  ................
00000080  7F 7F 7F 7F 7F 7F 7F 7F-7F 7F 7F 7F 7F 7F 7F 7F  ................
00000090  7F 7F 7F 7F 7F 7F 7F 7F-7F 7F 7F 7F 7F 7F 7F 9F  ................
```

Table 2. Corrupted Calcfg.ini File Example

Repair of Corrupted Calibration Data disk

1. Boot up instrument
2. Insert Calibration Backup Disk into the instrument floppy drive.
3. From the HFA2i instrument **Diagnostic** menu select **SAVE** to save Calibration Data onto the original Calibration Backup Disk.
4. Take out the disk and follow instructions 2-14 of the Verification of Calibration Backup Disk procedure above.
5. Initial and date the disk label.
6. Return the Calibration Backup Data disk to the holder in the cable compartment of the instrument.
7. Turn off instrument and reboot.
8. Verify the configuration settings are correct.

Manufacturing Verification of Calibration Backup Disk File Implementation

Instruments that have been manufactured with the new Calibration Backup Disk verification process start with the following serial numbers:

720i-5838	**740i-11446**	**745i-4559**	**750i-9393**

Correction of Writing Corrupted Backup Data Disks

The next HFA2i software release will have provisions that will reduce or eliminate the possibility of writing corrupted data to the Calibration Backup disk. This bulletin will be revised at that time.

CARL ZEISS MEDITEC

SERVICE BULLETIN

Instrument:	**Humphrey Field Analyzer II-i**	No.:	**FA2i-024A**
Subject:	**Stepper Motor Errors**	Date:	**27 Jul 07**
Status:	**Informational**	Pages:	**1**

This bulletin replaces Service Bulletin FA2i-024

Problem

Intermittent ***stepper motor*** errors and ***check stepper motors and lamp*** errors.

Cause

Glue contamination on the aperture wheel shaft may be one cause of the ***stepper motor*** errors and ***check stepper motors and lamp*** errors. The glue on the aperture shaft increases friction between the aperture shaft and the carriage assembly. The additional friction can make it difficult or impossible for the motor to rotate the wheel to the correct position, thus causing an error.

Solution

Changes have been made to the manufacturing process of the aperture wheel assembly. Gluing the shaft to the hub has been replaced with press fitting the shaft to the hub.

Instruments that have been manufactured with the press fit aperture start with the following serial numbers:

720i-5920	**740i-11702**
745i-4615	**750i-9549**

CARL ZEISS MEDITEC

SERVICE BULLETIN

Instrument:	**Humphrey Field Analyzer II i**	No.:	**FA2I-025A**
Subject:	**Optional Features Licensing Procedure**	Date:	**11 Nov 05**
Status:	**Informational**	Pages:	**5**

This bulletin replaces Service Bulletin FA2i-025 and has been completely rewritten.

This bulletin provides the procedure for using the licensing utility as it is presented in instrument software revision 4.0. The licensing procedure will need to be performed during option feature upgrades and during new instrument installations, provided the feature has been purchased.

Several optional software packages have been developed for the HFA2i. These features are loaded on to the system via the application software, and must be activated via a license generation utility. The process of loading the system software is described in the service manual and in the installation notes for each released software revision. The table below indicates the name of the optional software, models it is compatible with, which models it is provided with and which software revision it first appeared with.

Optional Software Name	Compatible Models	Provided with Models	First Release Software
Glaucoma Progression Analysis	740i, 745i, 750i	740i, 745i, 750i	Revision 3.5
Improved Glaucoma Progression Analysis	740i, 745i, 750i	740i, 745i, 750i	Revision 4.0
SITA SWAP	745i, 750i	745i, 750i	Revision 4.0
Networking (Standard)	720i, 740i, 745i, 750i		Revision 4.0
Networking Pro	740i, 745i, 750i		Revision 4.0

Note: *The optional software features HFA-Net and HFA-Net Pro require pre-approval prior to purchase. For US Domestic installation contact Customer Service for details. For International installation contact your Carl Zeiss affiliate or distributor for details.*

New Software Product Licensing Procedure

This is a 3-step process. Details for each step follow:

A. On the HFA2i, obtain the Node ID and HFA serial number from the License Registration Screen.
B. Obtain License Key and Security Code from the CZMI website via the Internet.
C. Enter Licensing Information on the HFA2i.

Preliminary Steps For Optional Features Upgrade and Licensing

1. Complete the installation of the revision 4.0 (or higher) system software.
2. Complete the conversion of the database.

Note: *Each instrument has a unique Node ID, however, the Node ID remains the same regardless of which software option you are trying to license.*

A. Obtain the Node ID and HFA serial number from the License Registration Screen on the HFA2i.

1. From the HFA2i instrument *Main Menu*, select **System Setup.** Then press **Additional Setup**. Press the **Install Software.** Press the **Install** button for the appropriate feature being licensed (Figure 1). For illustration purposes, we will follow the process for GPA licensing.

2. When the License Information screen for the software option opens (Figure 1), write down the Node ID information and the Instrument Serial Number provided. You will need this Node ID and the HFA2i Serial Number to complete the software licensing process on the Carl Zeiss Meditec website.

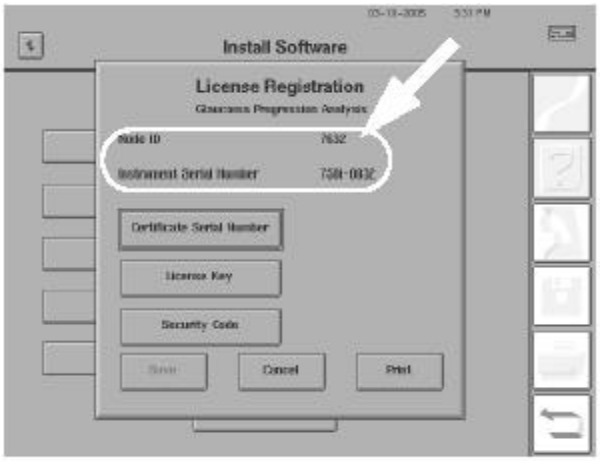

Figure 1. License Registration Screen.

B. Obtaining the HFA2i Software License Key and Security Code on the Internet

1. Go to a computer that is connected to the Internet and launch the Internet browser.
2. In the address bar, type in the following URL: *http://www.meditec.zeiss.com*. Select **Enter**.
3. At the top of the Zeiss homepage, click on the hyperlink to **Products** (Figure 2).

Figure 2. Carl Zeiss Meditec Home Page.

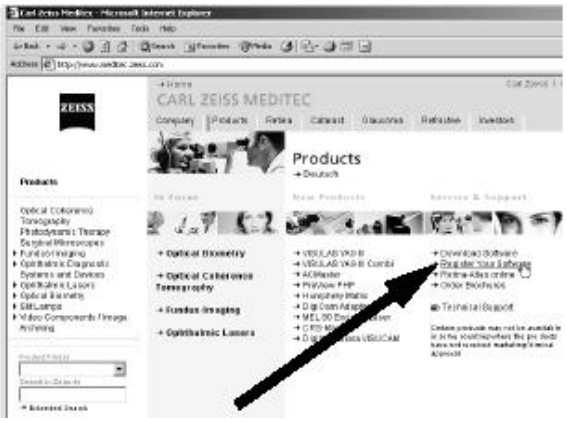

Figure 3. Carl Zeiss Meditec Product Page.

4. When the Products page opens, proceed to the column labeled **Service & Support** (Figure 3).
5. Click on the hyperlink for **Register Your Software**.
6. At the bottom of the page, select the word **form**. Follow the sequence of screens and data entries that are required to obtain the License Key and accompanying Security Code.

   Note: *When you enter the instrument serial number on the web, be sure to include the "i". For example, the number 750-1234 must be entered as 750i-1234. You will not be able to license software with an incorrectly entered serial number.*

7. Write down the License Key and Security Code, or print out and save the entire web page for later reference.

C. Entering the Licensing Information on the HFA2i

1. Select **Certificate Serial Number** from the License Registration Screen (Figure 1). A pop-up keyboard will appear, as is shown in Figure 4. Use the pop-up keyboard to type in the certificate serial number that is printed on the certificate. The certificate is found in the licensed software kit. When the entry is completed, select **Enter**.
2. When you are returned to the License Registration screen, select **License Key**. A pop-up keypad will open (Figure 5). Enter the License Key that you received from the Carl Zeiss Meditec website. Select **Enter** to record the data and return to the License Registration screen.

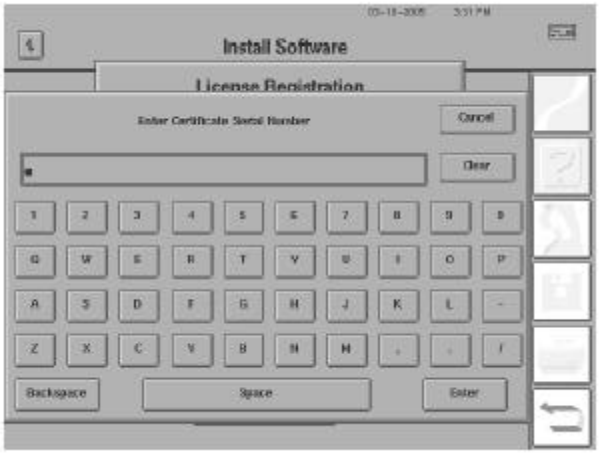

Figure 4. HFA2i Certificate Serial Number Input Screen.

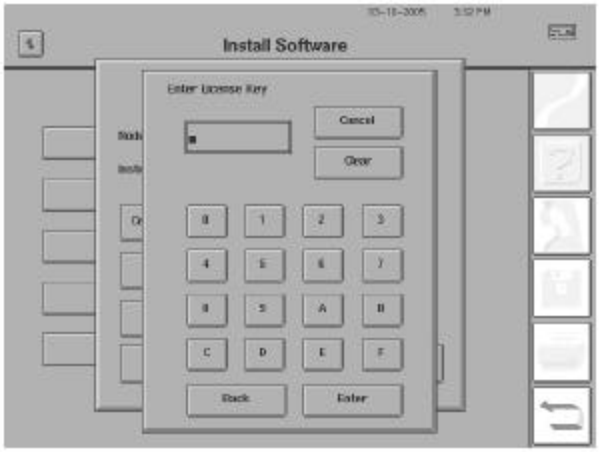

Figure 5. HFA2i License Key Input Screen.

3. Select **Security Code**. A pop-up keypad will open to allow you to enter the Security Code received on the Carl Zeiss Meditec website. Once you have entered the code, select **Enter** to record the data and return to the License Registration screen.
4. Select **Save** to record the settings and to return to the Install Software screen. If you have made a mistake entering the data, you will see the following dialogue:

One or more values entered are invalid. Please verify the values you have entered and try again.

5. If you have successfully entering the data, you will see the following dialogue:

The software has been installed successfully.

6. Select the newly registered product **Install** button. Select **Print** to print out a copy of the licensing settings for the customer. Tell the customer to save this information as it will be required should the licensing information on the system need to be restored. Ask the customer to staple or tape the printout inside of the HFA2i Owner's Guide.
7. Select **Done** to complete the licensing process, or select the appropriate button to license another software option.
8. After selecting **Done**, a message will be displayed "Please cycle power to restart." Turn off the HFA2i and wait approximately 10 seconds before turning it on again.
9. Create a new backup configuration disk.
10. This completes the Licensing process.

Removing the Licensed Feature

Situations may arise where the license must be removed from the system. Do not allow customers to casually press the "Remove" button on the License Information screen without serious consideration of the effects.

Note: *Once an optional software product is removed, it cannot be licensed again with the same product certificate number. Please contact Order Administration for assistance.*

1. From the HFA2i instrument Main Menu, select **System Setup.**
2. Select **Additional Setup**.
3. Select **Install Software.**
4. Select the **Install** button for the appropriate feature you are going to remove.
5. Select the **Remove** button. The following dialogue will be displayed:

Warning
*If you proceed, the feature, **feature name**, will no longer be available.*

6. At this point, you may choose the **Cancel** or **Proceed** button. **Proceed** will allow you to continue with the removal process. **Cancel** will halt the license removal process.
7. Select **Proceed**.
8. A dialogue will be displayed:

Feature name
Your Removal Code is XXXX/XXXX.

9. You will have two choices: **Print** and **Cancel**. **Print** will print the removal code and complete the removal process. **Cancel** will complete the removal process without printing the code.
10. Provide the removal code to your Carl Zeiss order entry group. The removal code is used to validate that the features have been removed. No customer credit will be given without the removal code.

Service

The data license can be lost during certain instrument repairs. A flowchart is provided to help the service engineer determine if the licensing is affected and what follow-up steps are required to restore the license.

HFA2i Field Repairs Affecting Software Licenses

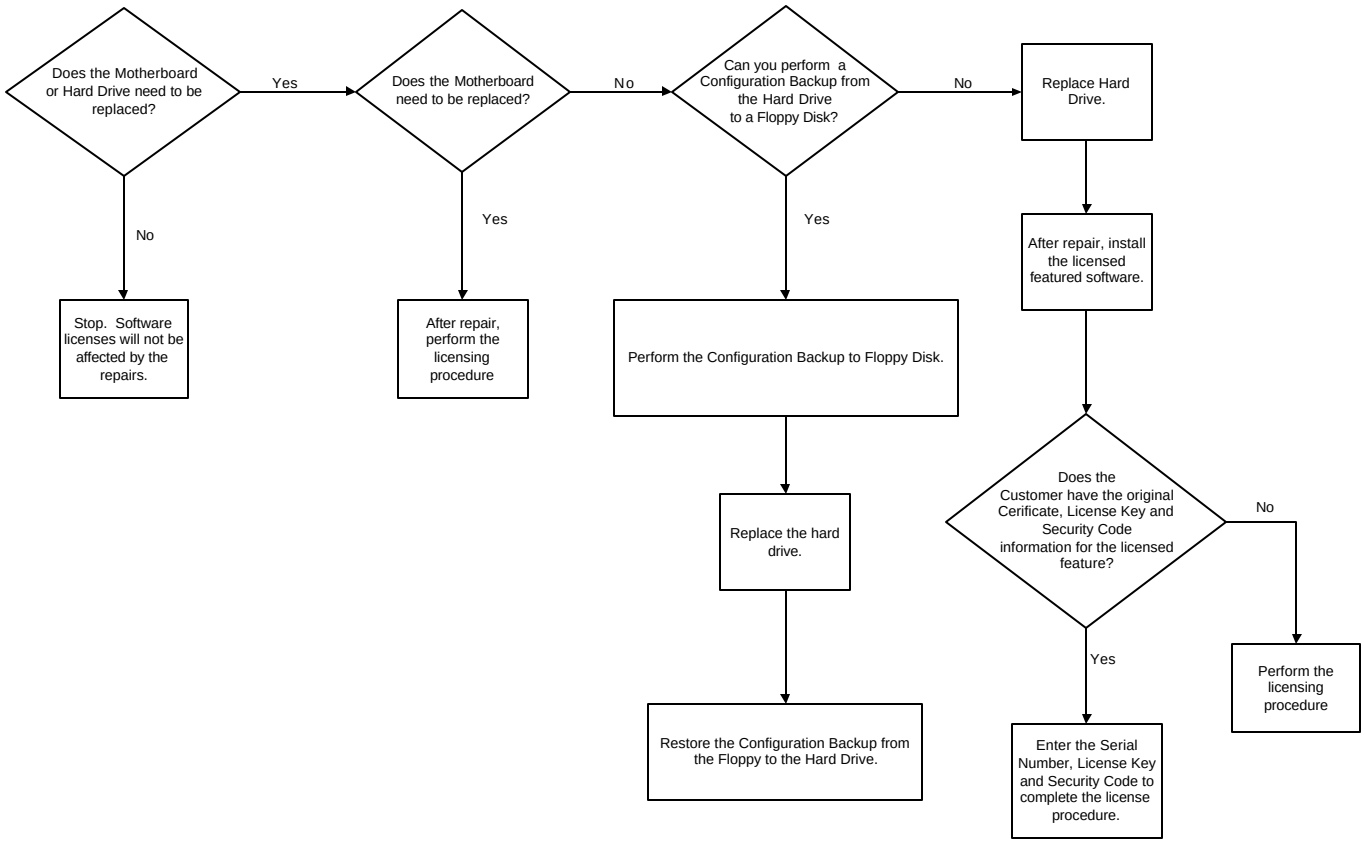

CARL ZEISS MEDITEC

SERVICE BULLETIN

Instrument:	**Humphrey Field Analyzer II-i**	No.:	**FA2i-026**
Subject:	**System Validation Form - Prevail**	Date:	**7 Apr 04**
Status:	**Mandatory - Domestic Only**	Pages:	**4**

Domestic Field Service:

A new System Validation Form has been released for the HFA II and HFA II-i. The System Validation Form is required for all HFA II and HFA II-i field service calls. The values for the System Validation Form are to be entered into the Prevail system when filling out your Field Service Report.

You are still required to perform the tasks specified in the System Checkout Checklist in Section 2 of the Service Manual, but you will no longer need to submit the checklist with your Service Report. Values obtained during the System Checkout will be entered into the System Validation Form on line.

The fields required on the System Validation Form are dependent on what type of Service Call, and whether or not the instrument is equipped with B/Y hardware.

Service Call Types

- Basic Service Call – Calls that do not require Intensity Verification or Calibration
- Intensity Verification – Calls that require Intensity Verification only
- Intensity Calibration – Calls that require Intensity Calibration and Verification

Attached is an example of the new System Validation Form.

International:

Continue to follow the current Checkout Procedures detailed in the Service Manual.

HFA II & II-i System Validation Form

Select the instrument type:

☐ White ☐ White & Blue/Yellow

Select the call type below. Only one call type can be selected.

☐ Basic Call (perform section 1.0)
(Calls that do not require Intensity Verification or Calibration)

☐ Intensity Verification (perform section 1.0 and 2.0)
(Calls that require Intensity Verification only)

☐ Intensity Calibration (perform section 1.0, 2.0, 3.0 and 4.0)
(Calls that require Intensity Calibration)

1.0 All Service Calls

1.1 Your 'Known' foveal threshold _____dB

1.2 Your 'Before' foveal threshold (Sec 4.1.1) _____dB

1.3 White Projector Voltage Drop (App H.1) _____v

1.4 Total Working Wedge Attenuation (App H.1) _____

2.0 'Before Calibration' Verification Data (App H.2)

2.1 Soligor Light Meter S/N _____

2.2 dB Spread (White) _____dB

2.3 Reading in FT-L for 29db _____FT-L

2.4 Reading in FT-L for Bowl (White) _____FT-L

2.5 *Blue Projector Value _____v

2.6 *dB Spread (Blue) _____dB

2.7 *Reading in FT-L for Bowl (Yellow) _____FT-L

* For instruments equipped with Blue/Yellow only

3.0 'After Calibration' Verification Data (App H.2)

3.1	Total Working Wedge Attenuation	_____
3.2	Your 'After' foveal threshold	_____dB
3.3	White Projector Voltage Drop	_____v
3.4	dB Spread (White)	_____dB
3.5	Reading in FT-L for 29db	_____FT-L
3.6	Reading in FT-L for Bowl (White)	_____FT-L
3.7	*Blue Projector Value	_____v
3.8	*dB Spread (Blue)	_____dB
3.9	*Reading in FT-L for Bowl (Yellow)	_____FT-L

* For instruments equipped with Blue/Yellow only

4.0 Worksheet (App I)

dB ratio = 10*Log(BKGDFtL / #37FtL)

***Note**: #37 is the same Ft-L value as the 29 dB data point on the White Light Verification Printout.*

1. Using above formula & values from the BEFORE White Light Verification Data Printout, find the OLD dB ratio: _____dB
2. Using above formula & values from the AFTER White Light Verification Data Printout, find the NEW dB ratio: _____dB
3. Find the dB shift: _____dB
   (OLD dB RATIO) – (NEW dB RATIO) = dB shift

Do you need to leave the calibration notice?

1. If dB shift is +/- 1dB, ***DO NOT*** leave the notice.
2. ***DO NOT*** include (+) or (–) signs on the notice.
3. If dB shift is (+), select *low* on the notice.
4. If dB shift is (–), select *high* on the notice.
5. If ±1dB or greater shift, leave the cal notice.
6. If ±4dB or greater shift, call your regional manager.

Leave Notice? ☐ Yes ☐ No

5160 Hacienda Drive, Dublin, CA 94568 (925) 557-4100 (1-800) 858-1508

CARL ZEISS MEDITEC

Date _____

Dear Doctor:

We checked the calibration of your Field Analyzer, serial number _____, today

and found that it was reading _____ dB too high ☐ / low ☐ (select). The instrument has now been recalibrated.

Please keep this calibration shift in mind when comparing future results against previous field. If it was reading too high, future tests of stable patients will tend to show an artifactual loss in threshold sensitivity in the amount shown above. If it was reading too low, future tests will tend to show an artifactual improvement.

We recommend yearly preventative maintenance and calibration checks for your Field Analyzer. Inquire about our service contracts, which include a yearly preventative maintenance visit.

If you have any questions, please contact Carl Zeiss Meditec at 1-877-486-7473 and ask to have your area's Regional Service Manager give you a call.

Sincerely,

Carl Zeiss Meditec

SERVICE BULLETIN

Instrument:	**Humphrey Field Analyzer II*i***	No.:	**FA2i-027**
Subject:	**HFA2*i* Upgrading Model 720*i* to Model 735*i***	Date:	**30 May 04**
Status:	**Informational**	Pages:	**6**

General Information

The information and instructions provided in this service bulletin will enable a trained HFA2*i* technician to upgrade a model 720*i* to a model 735*i*.

The upgrade from a model 720*i* to a 735*i* enables color testing (but not Blue-Yellow testing) and will make the 720*i* compatible with optional GPA features. GPA software is a license only product with the minimum application software revision of 3.5.

Before You Start

Listed below are a number of questions and answers that you should review before beginning the upgrade.

What is the minimum skill level for a technician to perform the upgrade?

This upgrade should only be performed if the technician has complete parts removal and replacement knowledge and complete instrument calibration knowledge. The procedures in this service bulletin offer guidelines for performing the upgrade. It is assumed that the technician has complete HFA 2*i* service knowledge.

How long will the upgrade take to complete?

The estimated time to complete the upgrade is 2.5 hours. This time takes into account an instrument pre-checkout, hardware and software changes, an instrument post-checkout, time to correct any unforeseen problems, and time to provide some limited customer training.

Tools Required to Perform the Upgrade

Listed below are the tools required to perform the upgrade.

Description	Part No.
HFA2*i* Service Manual and Service Bulletins	52235
Soligor Light Meter Kit	14905
Soligor Mount Adaptor (HFA I/II) (set of 2)	30248
Bowl Shroud	54710
Diagnostic Support Tool (DST) diskettes	see FA2i-005X for current version
Service Key	30141-2
Miscellaneous Hand Tools	(acquire locally)

Upgrade Kit Part Numbers

When you open the upgrade kit box, inventory all of the parts before beginning the upgrade. If any parts are missing, please contact CZMI. For parts missing from U.S. Domestic orders, contact Customer Service Parts. For parts missing from international orders, contact the International Parts Order Administrator for your country.

NOTES: *Each upgrade kit contains the current revision of HFA2i System Software. This revision of software will be loaded into the instrument as part of the upgrade procedure.*

Description	Part No.	Quantity
720*i* to 735*i* Upgrade Kit (contains all parts listed)	**30557-7**	
HFA2*i* System Software (Current Revision)	N/A	1
Color Wheel	29979-2	1
Washer, Flat, .223/.366/.031, Nylon	07063	3
Washer, Flat, .200/.359/.048, SST	21517	3
Washer, Wavy, .200/.370/.006, SST	30031	2
Retaining Ring	06085	1

Installation Guidelines

The installation guidelines will make frequent reference to a section in the HFA2*i* Service Guide. For example, you may see ***section 2, 3***, or ***Appendix G*** following an instruction. This indicates that you can refer to those sections in the HFA2*i* Service Guide for additional help on completing that particular procedure.

Instrument Pre-Checkout

Prior to beginning the upgrade, it is essential that you gather all instrument operational data. Without first acquiring this information, you may encounter problems completing the upgrade procedure.

To acquire all instrument operational data, perform the following:

1) Perform the System Checkout (section 2) and complete the before - Field Light Intensity Data Worksheet.

2) Back up the customer's configuration settings (Alter Main Menu data and Setup Menu data) to a diskette. (Use the Backup Configuration pad in Additional Setup.)

Hardware Installation

The following instructions provide procedures for installation of a color wheel.

 # Color Wheel Installation

To install the color wheel, refer to Figure 1 and follow the guidelines given below.

CAUTION: *To avoid dropping any loose parts into the instrument during this procedure, spread a soft cloth beneath the color wheel to catch any parts that may drop. Spring tension created by the curvy washers on the color wheel shaft can cause the small hardware to fly off when the retaining ring is being removed or installed.*

1) Remove the front and rear covers (section 3).

2) Install the new color wheel (refer to Figure 1).

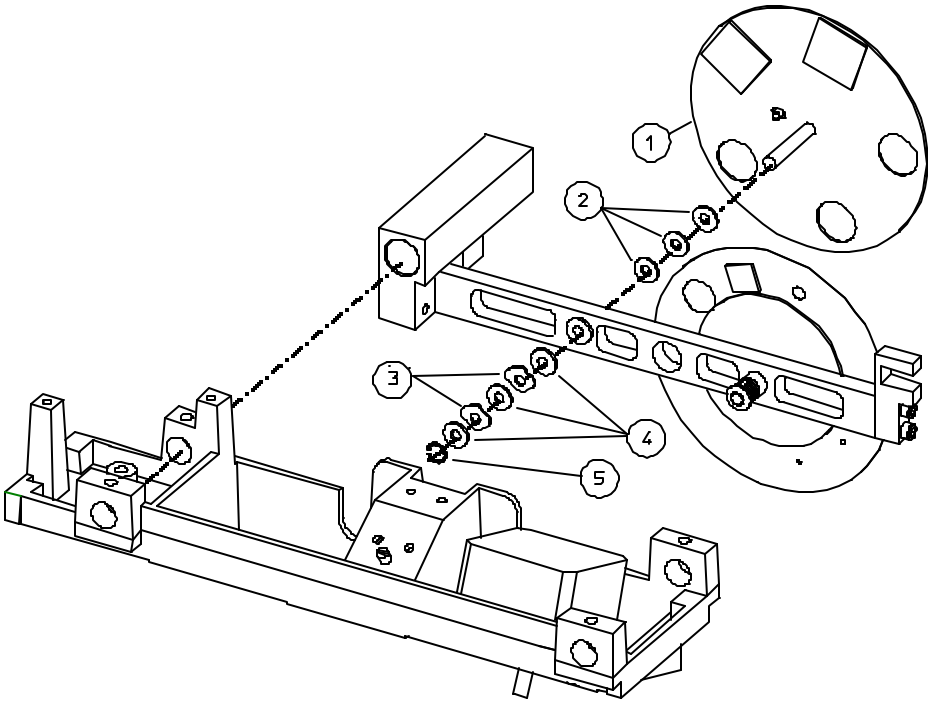

FIGURE 1. Color Wheel Installation

Item	Part No.	Qty	Description
1	29979-2	1	Color Wheel
2	07063	3	Washer, Flat, .223/.366/.031, Nylon
3	30031	2	Washer, Wavy, .200/.370/.006, SST
4	21517	3	Washer, Flat, .200/.359/.048, SST
5	06085	1	Ring, Retainer

Setting the Hardware Options Number and Software Options Number

1) Use the Diagnostic Support Tool (DST) diskettes and service key to set the Hardware Options number: From the DST Main Menu select Set Model/Hardware Options. Select Set Model 735*i* Defaults, a test log menu appears and displays the Model 735*i* default settings. Select Continue. Switch OFF the instrument and remove the Service Key.

2) Load the current revision of HFA2i System software included in the upgrade kit (refer to the Appendix section of the Service Manual). Loading the software will set the software options number. This step must be done ***AFTER*** the hardware options number has been set.

3) Once the software is loaded, proceed to the "I" Information screen. Verify that the correct model and hardware options numbers have been entered.

NOTES: *If the instrument gives an error during the power-up sequence, select Proceed to get to the Main Menu. At the Main Menu, the Setup menu option can be selected. The error may occur because the color wheel is not yet calibrated. This calibration will be performed in the next procedure.*

Color Wheel Calibration and Test

As a result of installing a new color wheel earlier in this upgrade procedure, you must perform the following calibration and test:

1) Calibrate the color wheel (refer to section 4).

2) Enter QA Tests. Run the 30/60 mixed tests for 5 minutes. No errors should be reported. Observe the color wheel for proper operation.

Operational Checks

To ensure that the upgraded features are accessible to the operator, perform the following operational checks.

1) Proceed to a patient test.
2) Select Change Parameters.
3) Select a red stimulus.
4) Start the test. Look into the bowl and ensure that a red stimulus is displayed while testing.
3) Select a blue stimulus.
4) Start the test. Look into the bowl and ensure that a blue stimulus is displayed while testing.

Instrument Post-Checkout

Prior to completing the upgrade, it is essential that you perform an Instrument Post-Checkout. This will ensure that the instrument is in calibration and all features are operational.

1) To perform the Instrument Post-Checkout, perform the System Checkout (section 2).

Suggestions for Customer Training

1) Ensure that the customer has an understanding of how to access Change Parameters and select stimulus color changes.

Reporting the Upgrade to CZMI

All upgrades performed to the HFA2i must be reported to CZMI as described below.

WARNING: *Any unauthorized HFA2i upgrades (those performed without notifying CZMI) will automatically be downgraded to the pre-upgrade model and features when a future revision of software is loaded into the instrument.*

1) U.S. Domestic service technicians need not provide any additional information other than the follow up documentation as described in the following section of this bulletin. Prevail system coding will alert Customer Service to record the upgrade information found in the Service Report Form.

2) International (Affiliates and Distributors) service technicians must send a fax to CZMI Customer Service (925-557-4652) containing the information itemized below *(**Note** ! For your convenience, an appropriate fax form is included at the back of this bulletin)* :

a) Technician's name and Affiliate/Distributor home office fax number.
b) The serial number of the HFA2*i* that was upgraded.
c) The customer's name and address.

3) Once Customer Service receives this information, the Order Administration database will be updated to indicate the new instrument configuration. ***If the information is not received, any subsequent software revision upgrade on the instrument will cancel the authorized but unreported model 735i configuration upgrade, and a second service call will then be required to restore the instrument configuration to model 735i.***

Finishing Up

Follow Up Documentation

1) U.S. Domestic service technicians must perform the actions and complete the following forms via the Prevail System:
a) HFA2i Service Report Form.
b) HFA2i - Light Intensity Worksheet (before/after/cal shift).
c) Calibration Notice (if required).

2) It is recommended that International Service Engineers return and file the appropriate paperwork at their Affiliate or Distributor offices.
a) Service Report Form.
b) HFA II - Light Intensity Worksheet (before/after/cal shift).
c) Calibration Notice - yellow copy (if required).

facsimile
TRANSMITTAL

to: CZMI Customer Service

fax #: 925-557-4298

re: HFA2i 720i-to-735i Upgrade Notification

date:

pages: 1, including this cover sheet.

Technician's Name . _____

Affiliate/Distributor Fax No. _____

Instrument Serial No. _____

Customer's Name
and Address: _____

_____

_____

_____

Date Upgrade Performed: _____

Comments: _____

_____

_____

_____

_____

_____

CARL ZEISS MEDITEC

SERVICE BULLETIN

Instrument:	**HFA 2i**	No.:	**FA2i-028A**
Subject:	**New Power Supply Released**	Date:	**15 Nov 05**
Status:	**Informational**	Pages:	**1**

This bulletin replaces service bulletin FA2i-028.

PROBLEM

The current power supply for the HFA 2i (P/N 51487-1) does not meet the new Harmonic Standard, effective November 1, 2004.

SOLUTION

Release a new power supply (P/N 57974) and new power supply harness (P/N 57988).
The new power supply harness is keyed so that it can only be used with power supplies manufactured on or after November 1, 2004. The new power supply is compatible with the old harness (the old harness WILL NOT need to be replaced).

The old power supply (P/N 51487-1) is no longer available. Order the new power supply (P/N 57974).

SERIAL NUMBER CUT-IN for New Power Supply and Harness:

720i-6432 740i-13246 745i-4948 750i-10147

Figure 1. New Power Supply P/N 57974

CARL ZEISS MEDITEC

SERVICE BULLETIN

Instrument:	**HFA 2i**	No.:	**FA2i-029**
Subject:	**Update to Service Manual**	Date:	**04 Nov 04**
Status:	**Informational**	Pages:	**1**

PROBLEM

An error was noted in the HFA 2i service manual with respect to the High Level Initialization.

SOLUTION

Add the following note prior to step 1), High Level Initialization / Appendix L, Page L-2.

NOTE: Change BIOS (Advanced CMOS Setup) 1st Boot Device from IDE-0 to Floppy. Change 2nd Boot Device from Floppy to IDE-0. Remember to save the changes when you exit the BIOS setup. Once Initialization has been completed, change the BIOS to its original setup. Remember to save the changes when you exit the BIOS setup. Load the appropriate system software.

CARL ZEISS MEDITEC

SERVICE BULLETIN

Instrument:	**Humphrey Field Analyzer II-i**	No.:	**FA2i-030A**
Subject:	**12.0 volt Regulator Assembly**	Date:	**20 Apr 06**
Status:	**On Failure Only**	Pages:	**2**

This bulletin replaces service bulletin FA2i-030

Problem

Some HFA instruments may display flicker and / or noise on the CRT screen.

Cause

The power supply may emit electrical noise.

Solution

If flicker or noise is visible, and the instrument serial number is below the serial numbers listed in this bulletin, install a 12.0 volt regulator assembly between the CRT harness and the Power Supply harness (see Figure 1). Position the regulator assembly behind the Motor board mounting plate, next to the Power Supply. The body of the 12.0 volt regulator is enclosed in heat shrink tubing.

Parts

Part Number	Quantity	Description
59034	1	12.0 volt Regulator Assembly

The following are the **starting serial numbers** for the replaceable 12.0 volt regulator assembly:

720i-6752 740i-13959 745i-5208 750i-6752

Update

To reduce expenses, the 12.0 volt regulator has been incorporated into the wiring harness, from the Backplane to the Monitor.

If the 12.0 volt regulator fails, the entire harness (P/N 58465), consisting of three cables, will need to be replaced.

The following are the serial numbers for the 12.0 volt regulator incorporated into the wiring harness:

720i-7073 740i-14770 745i-5525 750i-10860

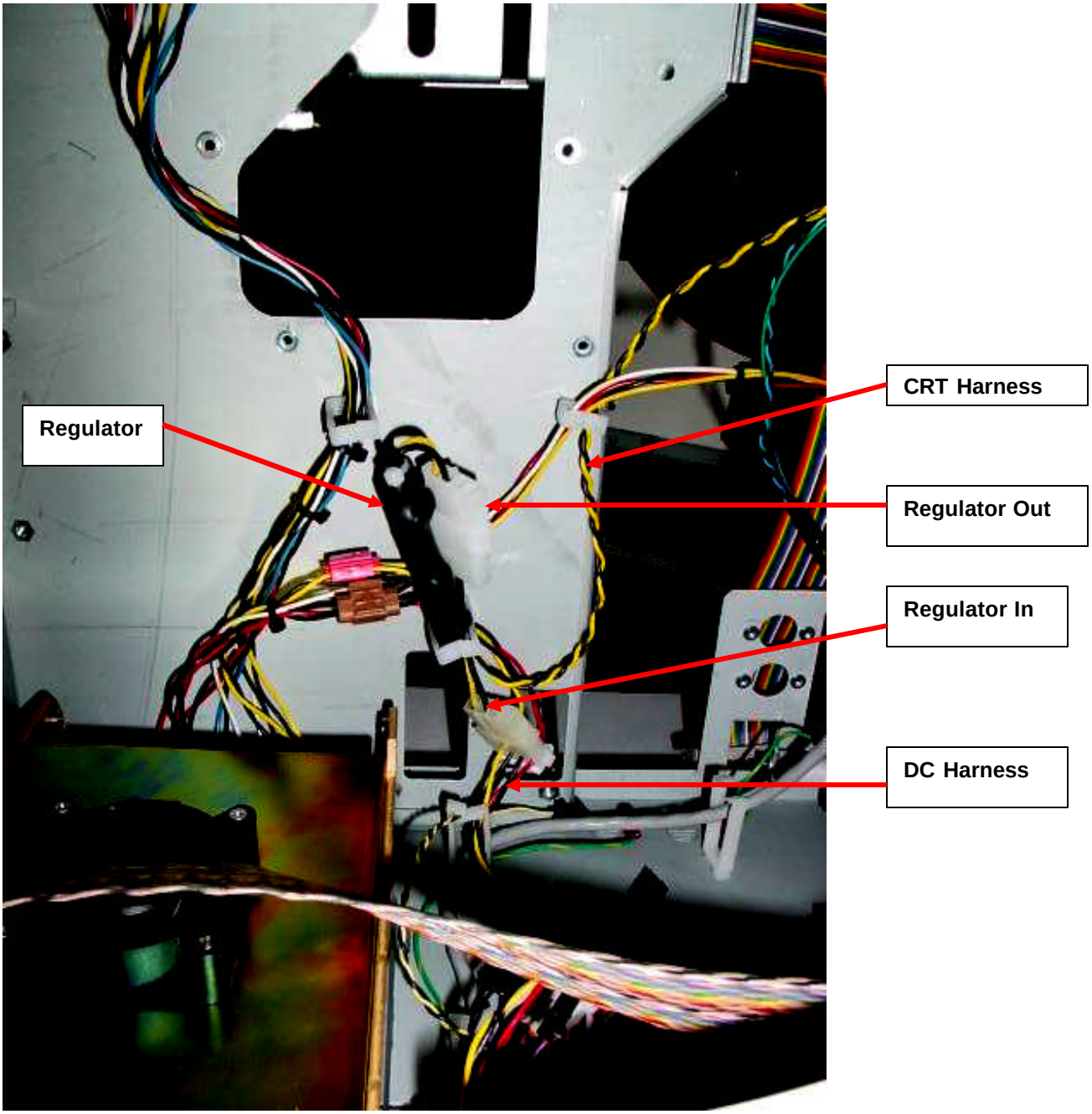

Figure 1. Location of the 12-Volt Regulator Assembly

CARL ZEISS MEDITEC

SERVICE BULLETIN

Instrument:	**Humphrey Field Analyzer II-i**	No.:	**FA2i-031A**
Subject:	**Calibration Changes with Revision 4.1 or Greater Software**	Date:	**15 Feb 08**
Status:	**Informational**	Pages:	**2**

This bulletin replaces Service Bulletin FA2i-031

Introduction

This service bulletin introduces changes to the HFA II-i calibration. Two new startup tests have been added with the release of software revision 4.1. These tests become active once the software has been loaded, and the instrument has been powered On. The first test evaluates the position of the shutter; the second test performs an evaluation of the aperture position.

Shutter Misalignment Test

At startup of the instrument, an evaluation of correct shutter positioning occurs. The instrument makes a measurement, with the shutter in place, and determines the light intensity that has passed around the shutter paddle. The passed light is compared against a limit. Failure of the test will result in a Startup State Error 18 error, *"Shutter may be misaligned*." Pressing Proceed will not allow testing. Failure of the shutter alignment test will require normal shutter calibration.

Aperture Spot Ratio Test

The spot ratio test measures the spot intensity ratio between spot sizes V and III. The spot ratio is determined and compared with a theoretical value of 16. If the spot ratio is not within the specifications (two dB or 58% of the expected value), a Startup State Error 19 error, "*Aperture may be misaligned"* results. Pressing Proceed will not allow testing. Failure of the spot ratio test will require the aperture calibration, followed by measuring and saving a spot ratio value that is within specification. The procedure is described in this bulletin.

During the first calibration of the instrument, once revision 4.1 software has been loaded, a tighter specification (26% of the expected value) for the spot intensity ratio test is implemented. Failure of the spot ratio test any time after a calibration has been completed will require the aperture calibration, followed by measuring and saving a spot ratio value that is within specification.

Measuring and Saving the Aperture Spot Ratio

In the aperture calibration menu, additional information to view and measure the aperture spot ratio is provided. The screen contains the following information:

V/III Spot Ratio
Stored
XX.XX (14.1 – 17.9)

Measured

- **XX.XX** represents the stored value of the V/III spot ratio.
- (14.1 – 17.9) represents the allowable range of the spot ratio.

- Calibrate all of the spot sizes, as per Section 4.8.2.3 of the Field Service Guide. However, you must not press the “Store” button after setting each of the positions. They will be held in memory and will be stored when you press the “Store” button when the spot ratio is in specification.
- After calibrating the spot sizes, press the “Measured” button.
- A *“Please Wait”* dialogue will temporarily appear.
- A new stored value entry then appears below the “Measured” button in the format, **XX.XX**.
- Check the new stored value. If the new stored value is within specified range (14.1 – 17.9), press the “Store” button to save the new spot ratio.
- Press “*Done”* button to leave the aperture calibration.

Note - *Left Home, Right Home and Offset calibrations will be required after aperture calibration.*

No other changes to the calibration process have been created with the HFA II-i revision 4.1 application software.

CARL ZEISS MEDITEC

SERVICE BULLETIN

Instrument:	**Humphrey Field Analyzer II i**	No.:	**FA2I-032**
Subject:	**Networking and Networking Diagnostic Tools**	Date:	**01 Dec 05**
Status:	**Informational**	Pages:	**6**

General Information

With the release of the Revision 4.0, Networking (HFA-NET) and Networking Pro (HFA-NET PRO) optional features software packages were created. To help the service engineer troubleshoot the new networking features, a suite of network diagnostic tools have been developed for the Humphrey Field Analyzer II-I (also known as the HFA2i) . This bulletin describes the use of these tools.

Domestic (USA) Service Support Policy

Service will primarily be performed at the customer site or, if the customer elects, via phone support. CZMI will be responsible to support the HFA2i networking functionality up to the point where the network cable plugs into the HFA2i. CZMI will not provide support past this point, but will offer training documentation to the customer on the different diagnostic tools provided with the HFA2i network software. All troubleshooting for the customer's network is the responsibility of the customer and CZMI will only be responsible to confirm the HFA2i networking software is able to ping the host computer.

If the customer has problems connecting the HFA2i networking software to their network, they will be provided two hours of support, free of charge. After that time however, the customer is billable for further support.

International Service Support Policy

Service will primarily be performed at the customer site, or if the customer elects, via phone support. CZMI will be responsible to support the HFA2i networking functionality up to the point where the network cable plugs into the HFA2i. CZMI will not provide support past this point, but will offer training documentation to the customer on the different diagnostic tools provided with the HFA2i network software. All troubleshooting for the customer's network is the responsibility of the customer and CZMI will only be responsible to confirm the HFA2i networking software is able to ping the host computer.

International CZMI affiliates or distributors will set their own policies for network support outside of the instrument.

Site Survey, Domestic

The Networking and Networking Pro optional features software packages are purchased software options. For domestic customers, it is highly recommended that prior to purchase of either optional features software package, the customer submit a Site Survey to the Order Entry group for approval. The survey is available from the sales representative. The completed Site Survey will be evaluated by the Technical Support Networking Group. Completion of the Site Survey will be a great aid in setting up and configuring the instrument and network.

Site Survey, International

International CZMI affiliates or distributors will set their own process for any preliminary required actions. It is recommended that the CZMI affiliates and distributors use the site survey developed by CZMI.

Optional Features Vs Model Compatibility Matrix

Optional Software Name	Compatible Models	Provided with Models	First Release Software
HFA-NET	720i, 740i, 745i, 750i	Optional	Revision 4.0
HFA-NET PRO	740i, 745i, 750i	Optional	Revision 4.0

Licensing Optional Features

The Networking and Networking Pro optional features software packages use the license generation utility to activate the new features. The license generation process is described in service bulletin FA2i-025(X). This bulletin will apply to all licensed HFA2i software products listed.

Ethernet Loop Back Connector

A tool used to test the ethernet port has been developed for HFA2i (Figure 1 & 2). This tool is provided in the kit for HFA–Net and Net–Pro. The loopback connector can be ordered from domestic and international parts administration. The use of the tool will be explained later in this bulletin. The loop back connector uses 26 AWG and a standard RJ-45 connector plug. It is wired as indicated below.

```
8 o
7 o
6 o-------------------------]     Pin 2 Tx to Pin 6 Rx-
5 o                          ]
4 o                          ]
3 o-----------]              ]
2 o-----------]--------------]
1 o-----------]                   Pin 1 Tx to Pin 3 Rx+
```

Figure 1. Loop back connector pin out.

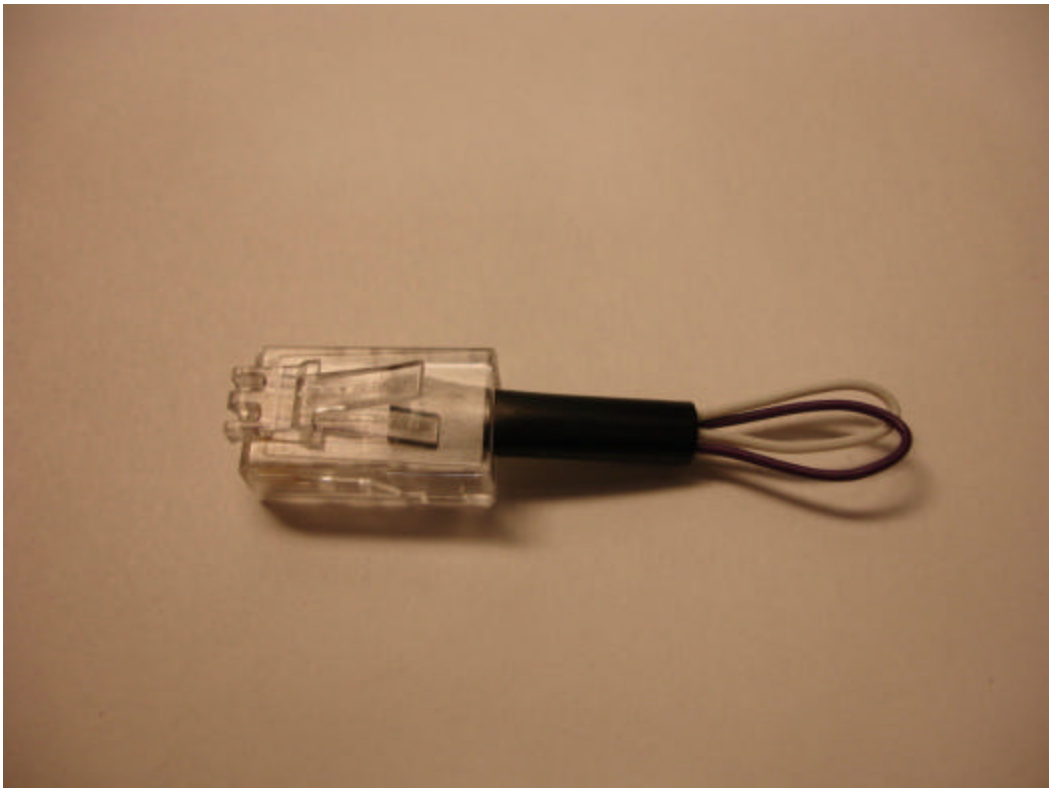

Figure 2. Loop Back Connector P/N 59798.

Networking Setup

Chapter 14 in the current HFA2i User's Guide has instructions on setting up the HFA2i networking features.

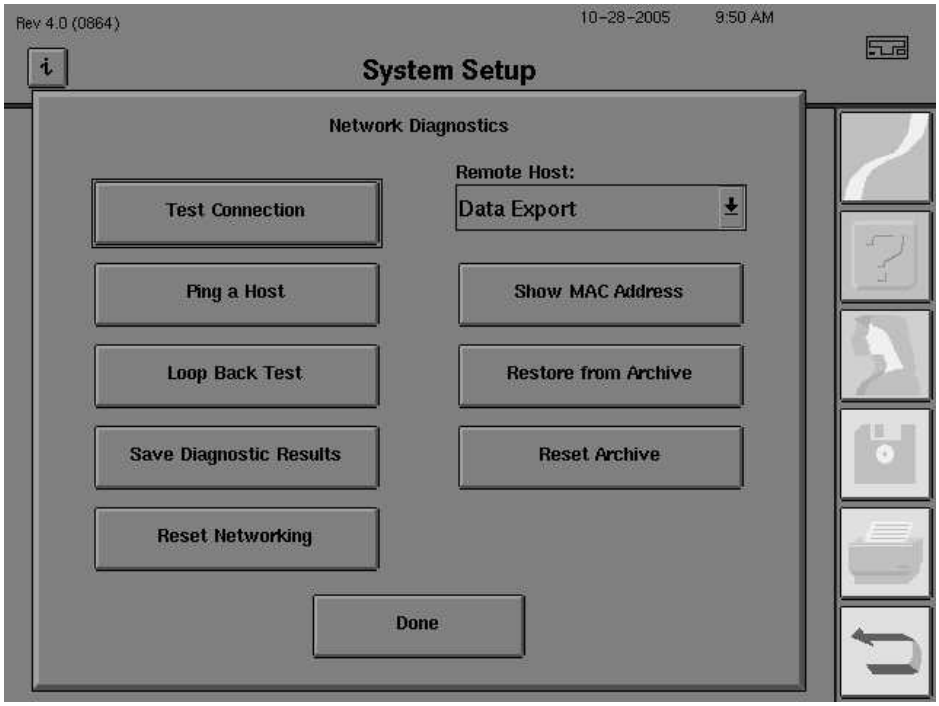

Figure 3. Network Diagnostic Screen.

Networking Diagnostics

Access the HFA2i Networking Diagnostics by selecting **System Setup -> Communication Setup -> Networking Diagnostic**. On the Diagnostic menu you will see the following buttons: **Test Connection, Ping a Host, Loop Back Test, Save Diagnostic Results, Reset Networking, Show MAC Address, Restore from Archive, Reset Archive**. There is also a drop down entitled **Remote Host** (Figure 3).

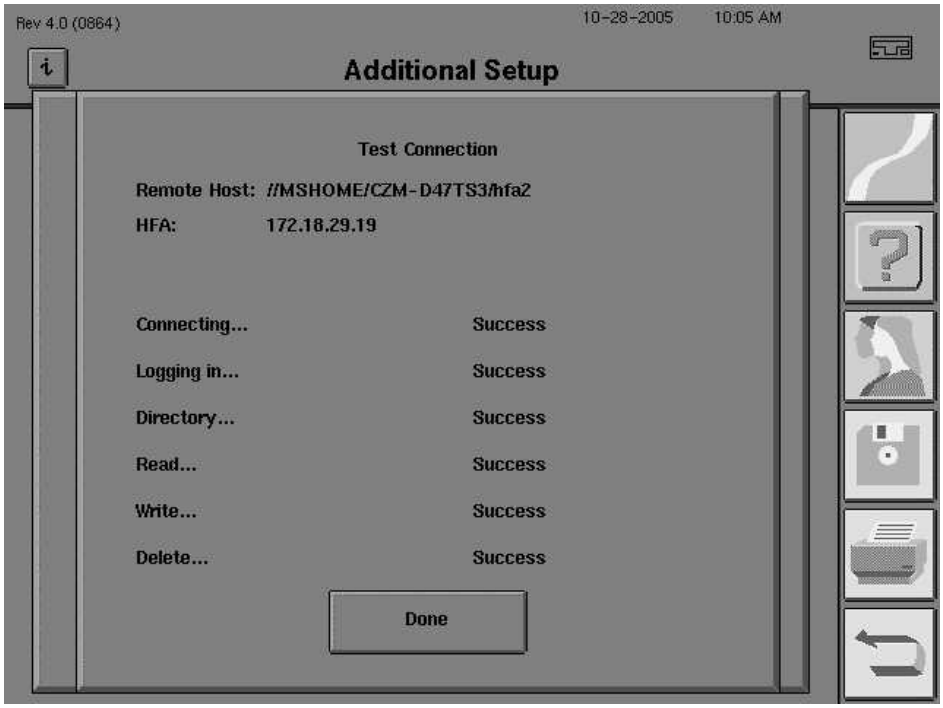

Figure 4. Test Connection Screen.

Test Connection – The **Test Connection** button initiates a series of tests that will indicate successful connection to the host, login to the host, access the host folder, read file from the folder, write to the host directory and delete from the host folder. The success or failure of each of these tasks can help in diagnosing problems (Figure 4). Each task will be recorded and then displayed on the setup screen. Prior to selecting the test connection button, ensure that parameters have been set in the **Communications Setup** screen. Failure to properly setup the shared folder or FPT site will result in failures during the test connection execution. This is one of the most powerful diagnostic tools in the diagnostic menu.

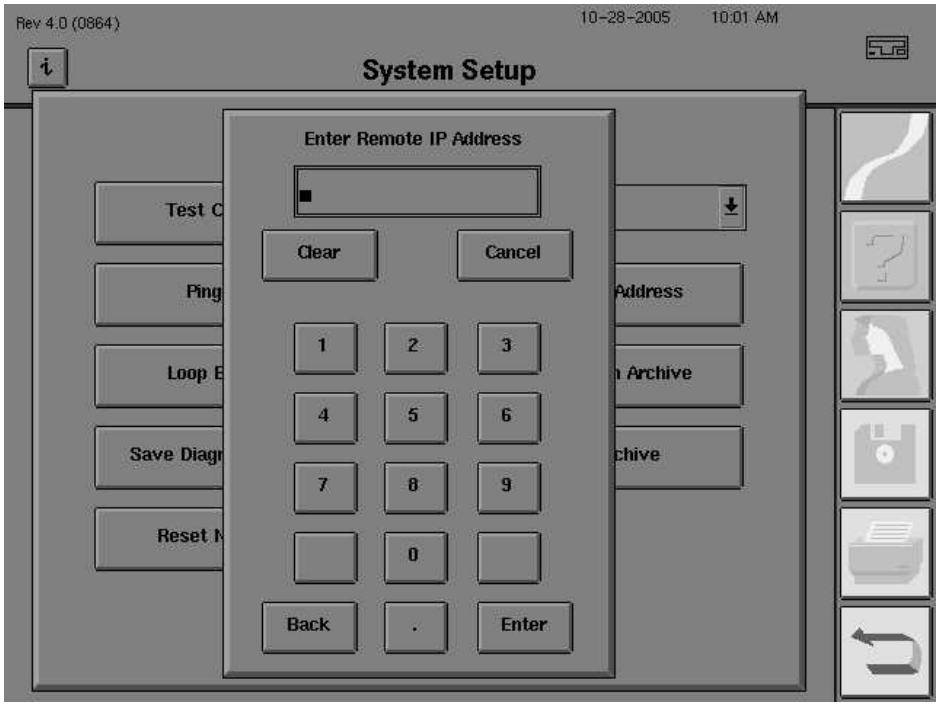

Figure 5. The Ping Dialogue.

Ping a Host – The Ping a Host button will perform the ping function to the IP address established in the Ping dialogue (Figure 5). If the address can be located, the ping will be successful. If the address cannot be located, the ping will be unsuccessful. An unsuccessful ping may be caused by a problem with the instrument Ethernet circuitry, an invalid IP address or connection/cabling difficulties.

Loop Back Test - The loop back test will test the ability of the Ethernet card to send information out the port and receive information into the port. To initiate the loop back test, select the **Loop Back Test** button, and connect the loop back connector to the Ethernet port of the HFA. Select the **Proceed** button. Upon completion of the loop back test a message will indicate if the test was successful or has failed. A failure of the test will indicate that the connector, the Ethernet port or both, are not working properly.

Show MAC Address - The MAC address is a number assigned to the Ethernet card. In the case of the HFA2i, the Ethernet card is integrated in the CPU motherboard. The ability to show the MAC address indicates a certain degree of HFA2i networking functionality. The MAC address is used by some networks to register the client and showing the MAC address can be used by the system administrator for troubleshooting purposes. To display the MAC address, select the **Show MAC Address button.**

Reset Networking – Selecting the **Reset Networking** button cleans up any file fragments for the Net-Pro optional software that resides on the host folder.

Restore from Archive – The **Restore from Archive** button will restore the archive files on the host to the HFA database. This tool is designed to be the last effort to restore a damaged HFA instrument database when all other tools have failed.

Reset Archive – The **Reset Archive** button causes the next archive from the instrument to include the complete content of the HFA database. All following archives will observe the “new records only” rule.

Save Diagnostic Results – The **Save Diagnostic Results** button will save the results of a session of diagnostic testing to a file that is written to a floppy disk. The file format for the save file is a *.txt* file. The saved files can be a great help to an engineer off-site working with a customer in troubleshooting the system. The engineer can have the instrument operator perform the test and save them to a floppy diskette. The files can then be sent via email to the engineer or printed and faxed to the engineer.

Additional Networking Troubleshooting Tools/Settings

To locate additional networking troubleshooting tools, select **System Setup -> Additional Setup -> Diagnostic**. Enter the password 1234 and select Enter. On the **User Diagnostic Menu** select the **Advanced Network Options** button. **Advanced Network Options** displays the **Enable startup connection** and the **Set Network Timeout**.

Select **Enable startup connection** for the following features: **Archive/Retrieve Host, Data Export Host, EMR/PMS Host** and **Worklist Host**.

Archive/Retrieve Host - Selecting **Archive/Retrieve Host** will activate the system software to attempt to confirm the connection to the folder on the server setup for the Archive/Retrieve Host each time the instrument starts up. The practice/engineer can select to have this feature to their preference.

Data Export Host - Selecting **Data Export Host** will activate the system software to attempt to connect to the folder on the server setup for the Data Export Host each time the instrument starts up. The practice/engineer can select to have this feature to their preference.

EMR/PMS Host - Selecting **EMR/PMS Host** will activate the system software to attempt to connect to the folder on the server setup for the EMR/PMS Host each time the instrument starts up. The practice/engineer can select to have this feature to their preference.

Worklist Host - Selecting and **Worklist Host** will activate the system software to attempt to connect to the folder on the server setup for the and Worklist Host each time the instrument starts up. The practice/engineer can select to have this feature to their preference.

The **Set Network Timeout** button will bring up a dialogue to select the number of seconds that the application attempts to connect to the file server before creating a connection error. The practice/engineer can select to have this feature to their preference.

Networking Troubleshooting Error Messages

Networking Error messages generated on the HFA2i are presented in a tabular format in appendix F of the HFAII-I User's Manual. These tables list the specific error messages in one column and possible solutions in the other. The four error tables are: **Specific Networking Errors, Unknown Networking Errors, General Networking Errors** and **Worklist Networking Errors**.

CARL ZEISS MEDITEC

SERVICE BULLETIN

Instrument:	**Humphrey Field Analyzer II-i**	No.:	**FA2i-033**
Subject:	**Recommended Spare Parts List**	Date:	**16 Nov 05**
Status:	**Informational**	Pages:	**2**

This bulletin lists the recommended spare parts needed to support field service activity on the HFA2i. The list is based on U.S. Domestic service requirements, wherein each Field Support Engineer covers a separate territory and maintains a separate spares inventory.

For International service operations, the items recommended should be adjusted locally after consideration of several relevant factors, including:

- Size of service territory covered;
- Total instrument population;
- Population of different models within the product line;
- Local electrical power requirements;
- Number of service reps working out of one location;
- Amount of training received by the local service reps;
- Service proficiency of the local service reps.

In all cases, the following list should be considered only as a recommended starting point. Final determination of the appropriate spares inventory must be done locally. This list reflects design changes and field service experience that have occurred since release of the *HFA II-i Service Guide, Rev B*. This list should be used in place of the spares recommendations indicated in Section 7 of the *HFA II-i Service Guide*.

NOTE: *This list* ***does not*** *include service tools for the HFA II-i, and does not include recommended spares for the HFA II-i power table. For tools, refer to Appendix A of the HFA II-i Service Guide. For power table parts, refer to the power table drawings in Section 7 of the HFA II-i Service Guide. Also check for any HFA II-i service bulletins that may relate to tools or power table parts.*

HFA II-i Recommended Minimum Parts Inventory
(Based on 50-Instrument Population)

P/N	Description
30411	Touchscreen, 12", CRT
29575	Patient Button Assy
48530-3	PCB, Motor Driver
58841-2	System Software, current version
29570	PCB, Interconnect, Patient Support Assy
53850	Kit, FRU, CCD Camera (720i, 740i, 745i, 750i)
30442	Edge Detector, Y-axis Assy
50610	PCB Assy, Brightness Detector
29550	PCB Assy, Interconnect, Projector
48820	PCB Assy, Fixation Interconnect
57974	Power Supply
51467	Keyboard w/touch pad
30434	Monitor Assy, Z-axis (CRT, Yoke, & PCB)
30432	CRT, 12" P4
30086	PCBA, CRT, Z-Axis
30087	Yoke, Z-Axis

P/N	Description
53355	Drive, Floppy, 3-1/2", High Density Formatted
52036	Drive, Hard, IDE (Formatted, but no software loaded)
48028	Diskette, 3-1/2" Formatted Box of 10
54568	MO Drive, IDE 3.5
52416	Cable, Serial Transfer, HFA I to HFA II - i
52417	Cable, Serial Transfer, HFA II to HFA II - i
29954	Lamp (for Yellow Bowl) 12V, 20W
22511	Power Cord, Hospital Grade, (100–120V)
22581	Power Cord, Euro, CEE7/7, 220-240V (Pwr Table to Wall Outlet)
29380	Door, Fan, Filter
29381	Filter, Fan, Bottom, 114mm/138mm/6.35mm
29793	Bottom Fan Assy
29581	Edge Detector Assy
30323	Projection Lamp Assy
29583	Motor, (X) Stepper, Turret
29981	ND Film Wedge Assy
29969	ND Glass Wedge Assy
29990	Background Light Assy, Left (replace left and right as a set) (See Note 1)
29989	Background Light Assy, Right (replace left and right as a set) (See Note 1)
30123	LED Assy, IR Illumination
49681-1	Trial Lens Holder Assy (720i)
49681-23	Trial Lens Holder Assy (740i/750i)
51804	HFAII-I CPU/ Backplane Assy (Enclosure with shipping box)

Notes:

1- Bowl lamps must be installed in pairs

CARL ZEISS MEDITEC

SERVICE BULLETIN

Instrument:	**Humphrey Field Analyzer II - i**	No.:	**FA2i-034**
Subject:	**Field Service Guide, P/N 52235, Revision C Release**	Date:	**13 Dec 05**
Status:	**Informational**	Pages:	**1**

Revision C of the Humphrey Field Analyzer II – i Field Service Guide is now available. Revision C updates all labeling to: Carl Zeiss Meditec.

Each Field Service Guide will include the entire Field Service Guide plus all Service Bulletins released at the time of the Field Service Guide duplication.

Distribution of the Humphrey Field Analyzer II – i Field Service Guide

Distribution of the Humphrey Field Analyzer II – i Field Service Guide will be done selectively, as follows:

U.S. Domestic Field Service

All Domestic Field Support Engineers can access Service Manuals / Field Service Guides through Lotus Notes.

International Service

All International Support personnel can access Service Manuals / Field Service Guides through the Extranet.

Additional copies of the Humphrey Field Analyzer II – i Field Service Guide are available in hard copy (paper) or on CD through standard parts order.

A) Item:..... Humphrey Field Analyzer II – i Field Service Guide, Revision C paper manual

P/N:..... 52235

U.S. Domestic List Price:..... $ 195.00

B) Item:..... Humphrey Field Analyzer II – i Field Service Guide, Revision C on CD

P/N:..... 52235-CD

U.S. Domestic List Price:..... $ 195.00

CARL ZEISS MEDITEC

SERVICE BULLETIN

Instrument:	**Humphrey Field Analyzer II - i**	No.:	**FA2i-035**
Subject:	**Test Connection Between Laptop & HFA II-i**	Date:	**28 Jul 06**
Status:	**Informational**	Pages:	**21**

General

This document describes how to test the connection between the HFA II-i and a laptop.

Summary

This service bulletin breaks down the connection testing into 5 categories:

A) Process
B) Configuring a Laptop to Communicate to the HFA II-i
   - Using Windows 2000
   - Using Windows XP
C) Ping Host Computer From the HFA II-i
D) Configuring the HFA II-i to Communicate to a Laptop
E) Testing
   - Machine Verification
   - Operator Verification

Tools Needed

- Crossover cable

A) Process

1. Click on the ***System Setup*** button.
2. Click on the ***Communications Setup*** button. The following screen will be displayed:

Figure 1. Communication Setup Screen

3. Click on the ***HFA Network Setup*** button.

   Note - *DHCP selection is indicated by an X on the* ***"Obtain HFA TCP/IP Settings Automatically,"*** *and the IP address and subnet are grayed out. If there is not an X on* ***"Obtain HFA TCP/IP Setting Automatically"*** *then you are using a static IP Address.*

4. Write down:
   - IP Address:_____
   - Subnet Mask:_____
   - Workgroup:_____

B) Configuring a Laptop to Communicate to the HFA II-i

Using Windows 2000:

1. On a Windows 2000 laptop, click **Start** > **Settings** > **Control Panel.**
2. In Control Panel, double-click on **Network and Dial-up Connections**. The following screen will be displayed:

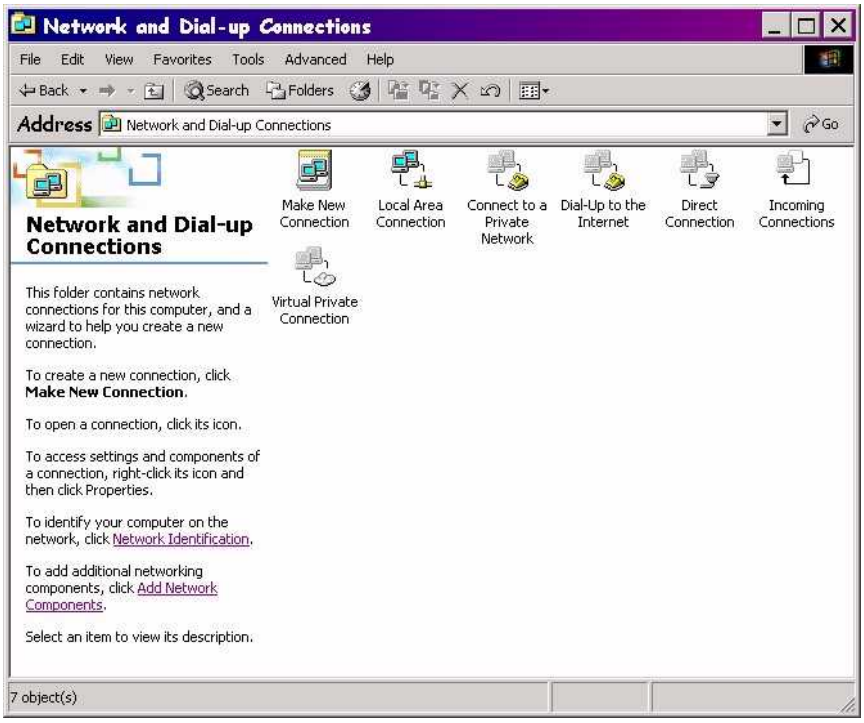

Figure 2. Network and Dial-up Connections Dialog Box

3. Right-click on the 'Local Area Connection' that is configured to work with the internal network adapter on the laptop, and then click **Properties**. The following screen will be displayed:

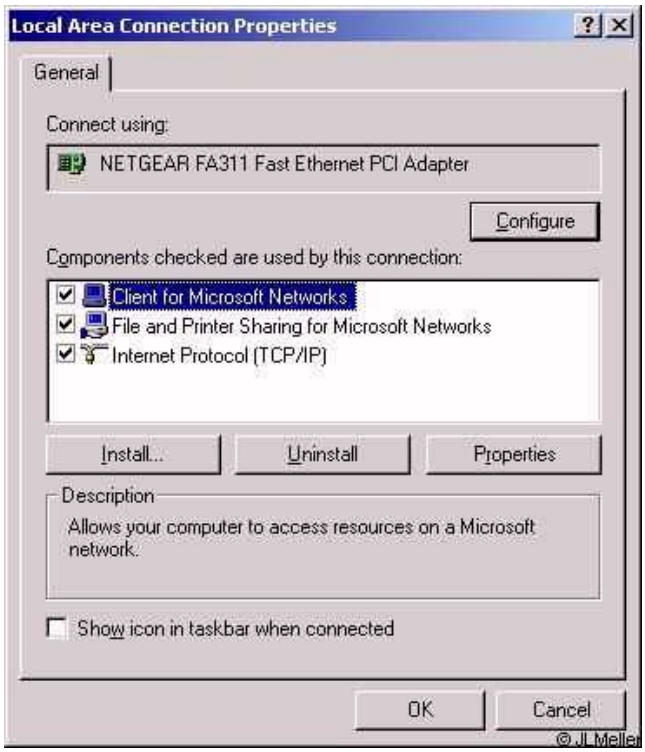

Figure 3. Local Area Connection Properties Dialog Box

4. In the "**Components checked are used by this connection"** (located in the center of the "General" tab), click (once) on **Internet Protocol (TCP/IP)** > **Properties.** The following screen will be displayed:

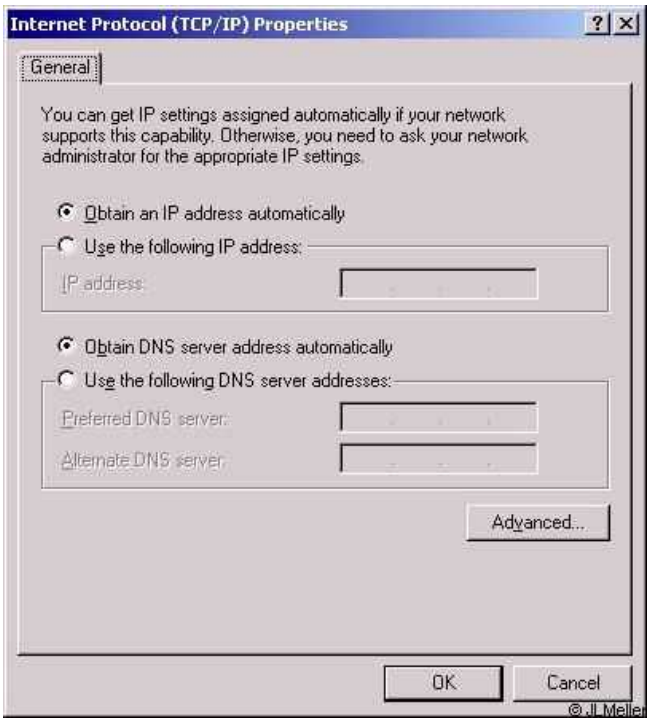

Figure 4. Internet Protocol (TCP/IP) Properties Dialog Box

5. Change the IP Address on your laptop to the same IP address the HFA has except for the last three digits. Change the last number of the three digits by one number **(by doing this you are putting your laptop on the same network as the HFA)**.

   Example:

   HFA IP = 192.168.1.12
   Your IP should = 192.168.1.11 or 192.168.1.13

   - Click in the **Subnet mask** area. Ensure that the Subnet mask on your laptop matches the subnet mask of the HFA exactly.
   - Click on **OK** and restart your laptop.

6. When your laptop comes back up, login to your laptop:
   - Right-click on the **My Computer** icon
   - Select **Properties**
   - Select the **Network Identification** tab
   - Write down the **Computer Name** and the **Workgroup Name**

7. Right-click on your **Desktop** and select **New** > **Folder.**
   - Name the folder **HFA**
   - Right-click on the folder you just created and select **Sharing** from the fly out menu.
   - Select **Share this folder**. The share name should be **HFA.** After you verify to make sure you have the correct share name, click **OK**.

Figure 5. HFA Properties (Folder) Dialog Box

8. On a Windows 2000 laptop, click **Start** > **Settings** > **Control Panel.**

9. Double-click on **Users and Passwords.** The following screen will be displayed:

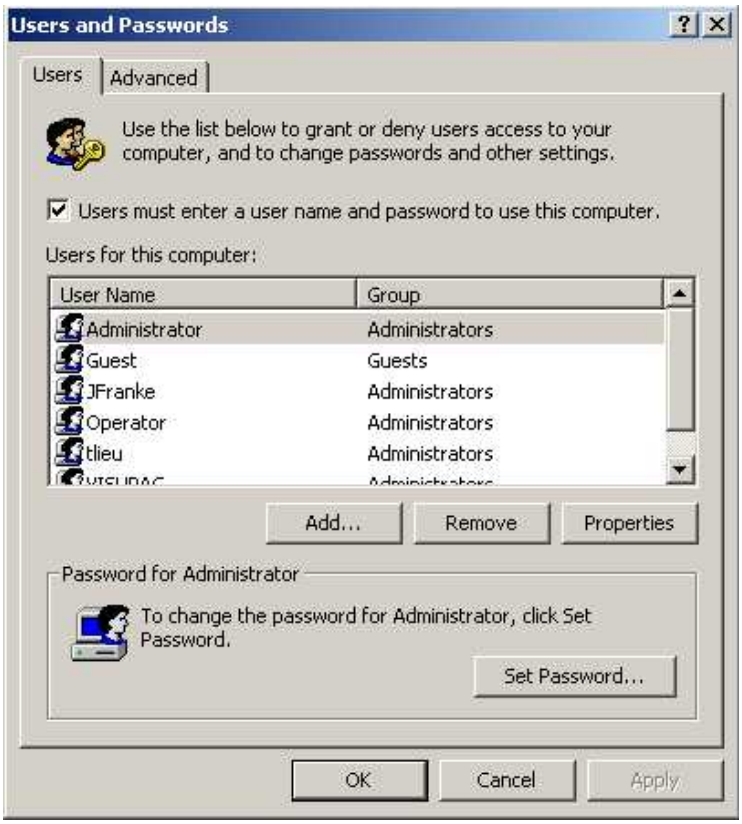

Figure 6. Users and Passwords Dialog Box

10. Click on the **Add** button. The following screen will be displayed:

Figure 7. Add New User Dialog Box #1

11. In the **User name** field, type in **Anonymous,** then click on **Next.** The following screen will be displayed:

Figure 8. Add New User Dialog Box #2

12. Without adding a password, click on **Next.** The following screen will be displayed:

Figure 9. Add New User Dialog Box #3

13. Click on the **Other** radial button and make sure **Administrators** is selected from the drop down box.
14. Click on **Finish**.

Congratulations! Your laptop is now ready to accept files from the HFA. Please connect the crossover cable to your laptop and to the HFA. Please proceed to **C) Ping Host Computer From the HFA II-i.**

Using Windows XP

1. For a Windows XP Laptop, click on **Start** > **Settings** > **Control Panel**.
2. In Control Panel, double-click **Network Connections.** The following screen will be displayed:

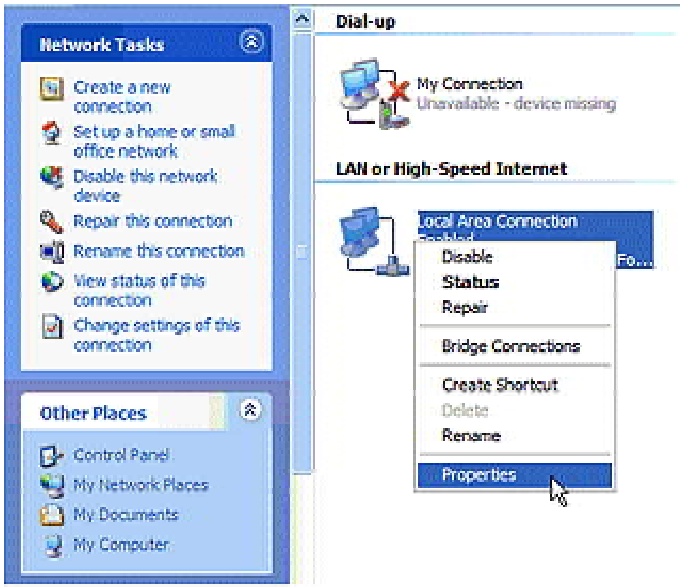

Figure 10. Network Connections Dialog Box

3. Right-click the 'Local Area Connection' that is associated with your internal network adapter on the laptop, and then click **Properties**. The following screen will be displayed:

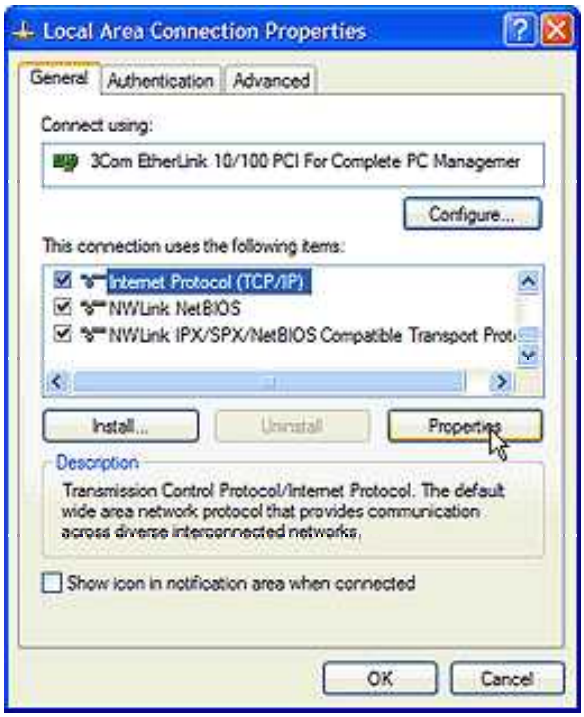

Figure 11. Local Area Connection Properties Dialog Box

4. In the "**This connection uses the following items:"** (located in the center of the "General" tab), click (once) on **Internet Protocol (TCP/IP)** > **Properties.** The following screen will be displayed:

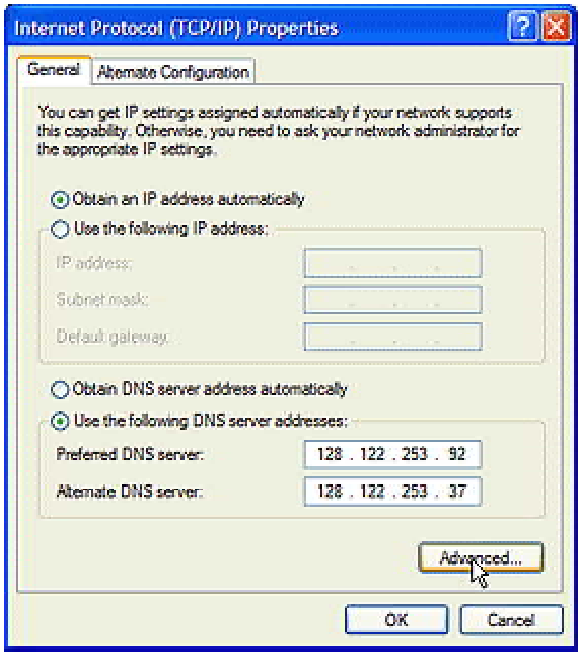

Figure 12. Internet Protocol (TCP/IP) Properties Dialog Box

5. Change the IP Address on your laptop to the same IP address the HFA has except for the last three digits. Change the last number of the three digits by one number **(by doing this you are putting your laptop on the same network as the HFA).**

   Example:

   HFA IP = 192.168.1.12
   Your IP should = 192.168.1.11 or 192.168.1.13

   - Click in the **Subnet mask** area. Ensure that the Subnet mask on your laptop matches the subnet mask of the HFA exactly.
   - Click on **OK** and restart your laptop.

6. When your laptop comes back up, login to your laptop:
   - Right-click on the **My Computer** icon
   - Select **Properties**
   - Select the **Computer Name** tab and write down the **Computer Name** and the **Workgroup Name**.

7. Right-click on your **Desktop** and select **New > Folder.**
   - Name the folder **HFA**
   - Right-click on the folder you just created and select **Sharing** from the fly out menu.
   - Select **Share this folder on the network**.
   - Check the box that says **Allow network users to change my files.** The share name should be **HFA.** After you verify to make sure you have the correct share name, click **OK**.

Figure 13. HFA Properties (Folder) Dialog Box

8. For a Windows XP Laptop, click **Start** > **Settings** > **Control Panel**.
9. Double-click on **User Accounts.** The following screen will be displayed:

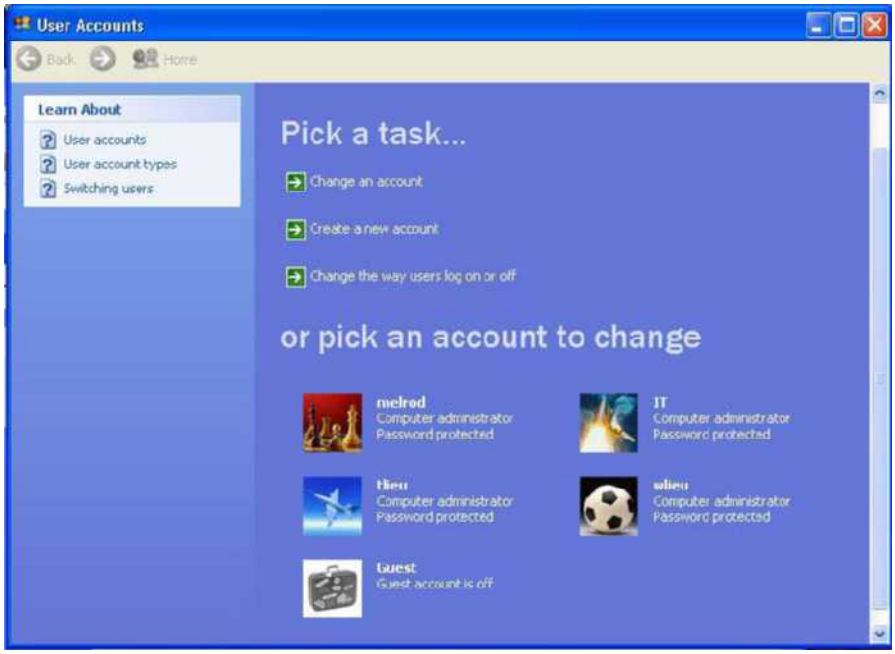

Figure 14. User Accounts Dialog Box #1

10. Click on **Create a New Account**. The following screen will be displayed:

Figure 15. User Accounts Dialog Box #2

11. Type in the name **Anonymous,** then click on **Next.** The following screen will be displayed:

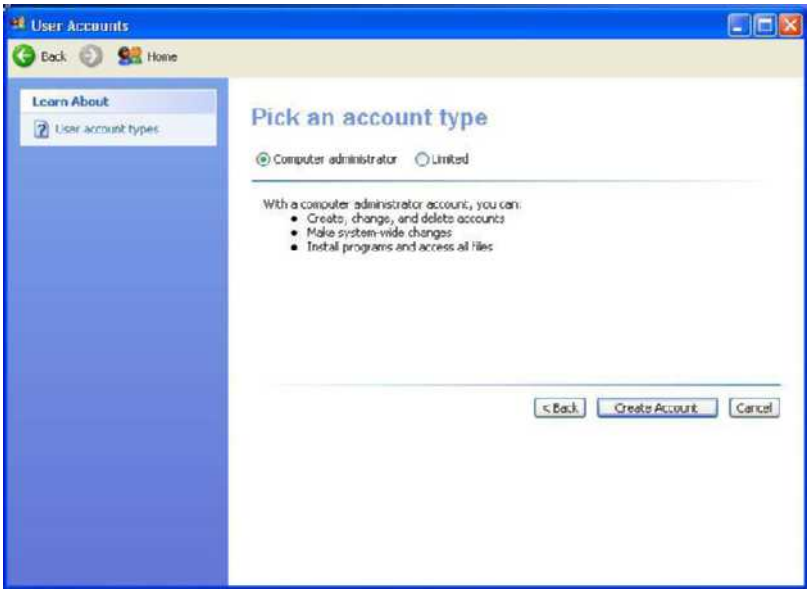

Figure 14. User Accounts Dialog Box #3

12. Make sure the green dot is in the **Computer Administrator** radial button and then:
    - Click on the **Create Account** button.
    - Connect the crossover cable to the laptop and to the HFA.

Congratulations! Your laptop is now ready to accept files from the HFA. Please connect the crossover cable to your laptop and to the HFA. Please proceed to **C) Ping Host computer from the HFA II-i.**

C) Ping Host Computer from the HFA II-i

1. Click on the **System Setup** button.
2. Click on the **Communications Setup** button. The following screen will be displayed:

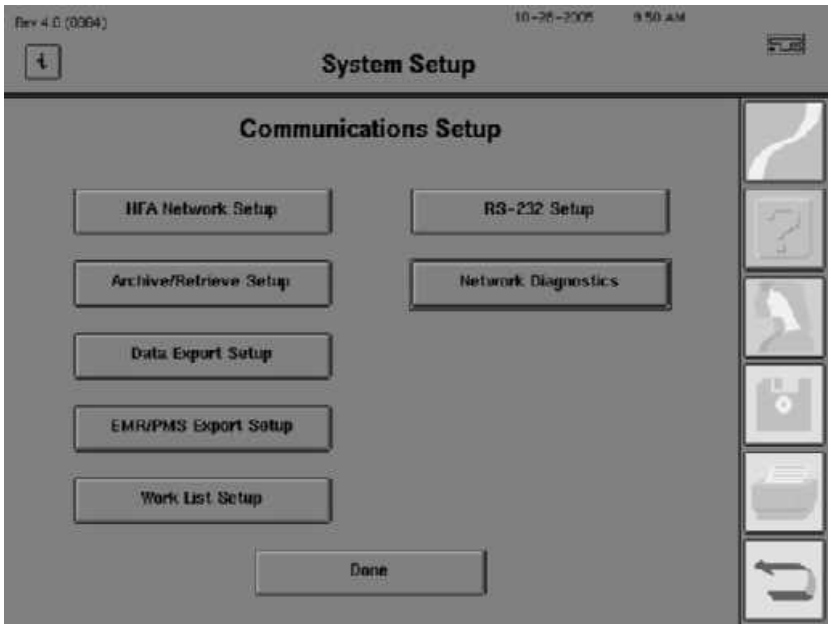

Figure 15. Communications Setup Screen

3. Click on the ***Network Diagnostics*** button. The following screen will be displayed:

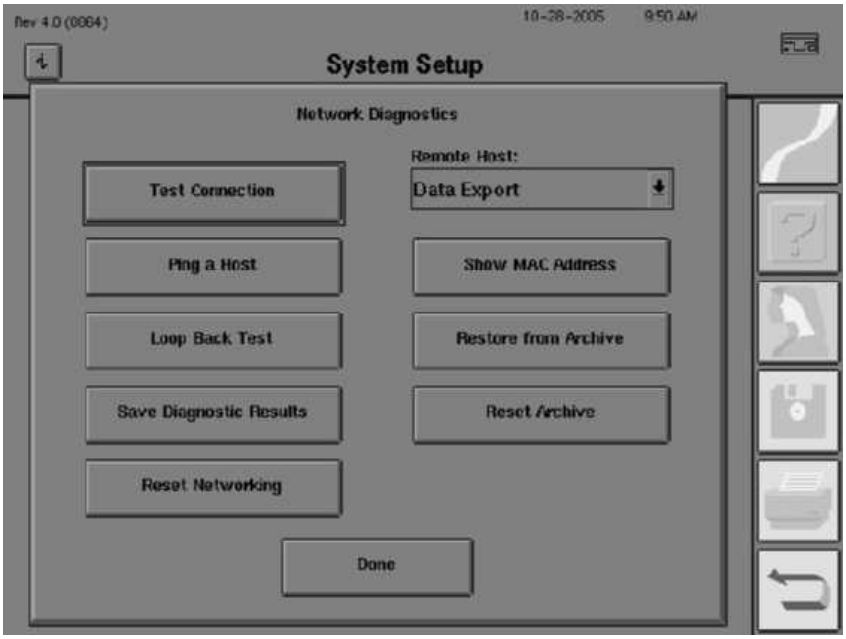

Figure 16. Network Diagnostics Screen

4. Click on the ***Ping a Host button***. The following screen will be displayed:

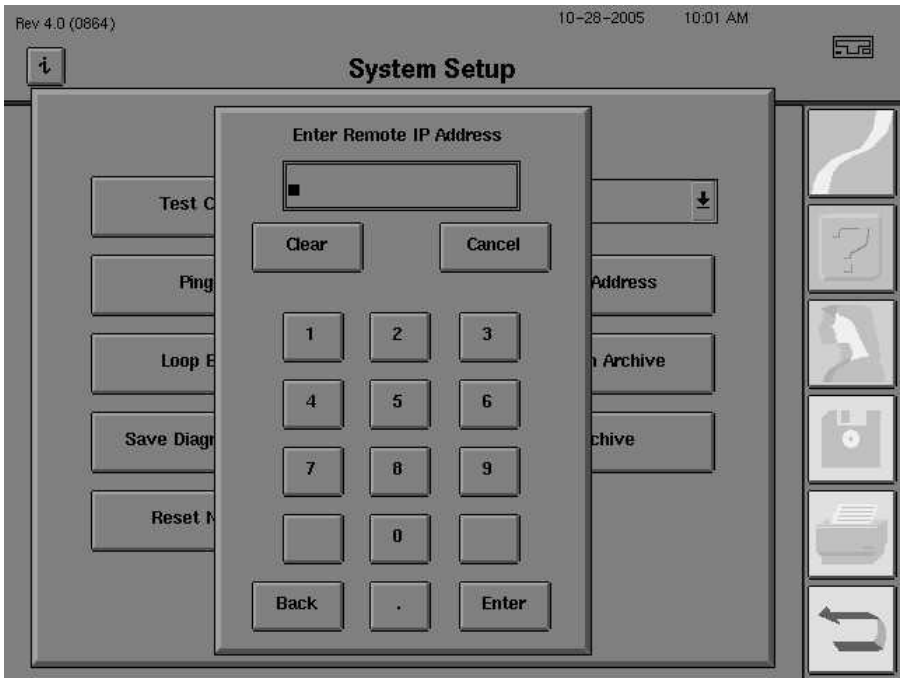

Figure 16. Enter Remote IP Address Screen

5. Enter the IP Address of your laptop into the box labeled ***Enter Remote IP Address***. After you enter in the IP Address of your laptop:
   - Push ***Enter***. At this point the HFA will try to ping your laptop. You will get a message that will say that the ping was successful or a message saying that the ping was unsuccessful.

   - If the ping was unsuccessful then check the following things:
     - IP Address of your laptop
     - the cable you are using is a crossover cable
     - the crossover cable is plugged in correctly

If you get a successful ping, continue on to **D) Configuring the HFA II-i to Communicate to a Laptop.**

D) Configuring the HFA II-i to Communicate to a Laptop

1. On the HFA, click on the ***System Setup*** button.
2. Click on the ***Communications Setup*** button. The following screen will be displayed:

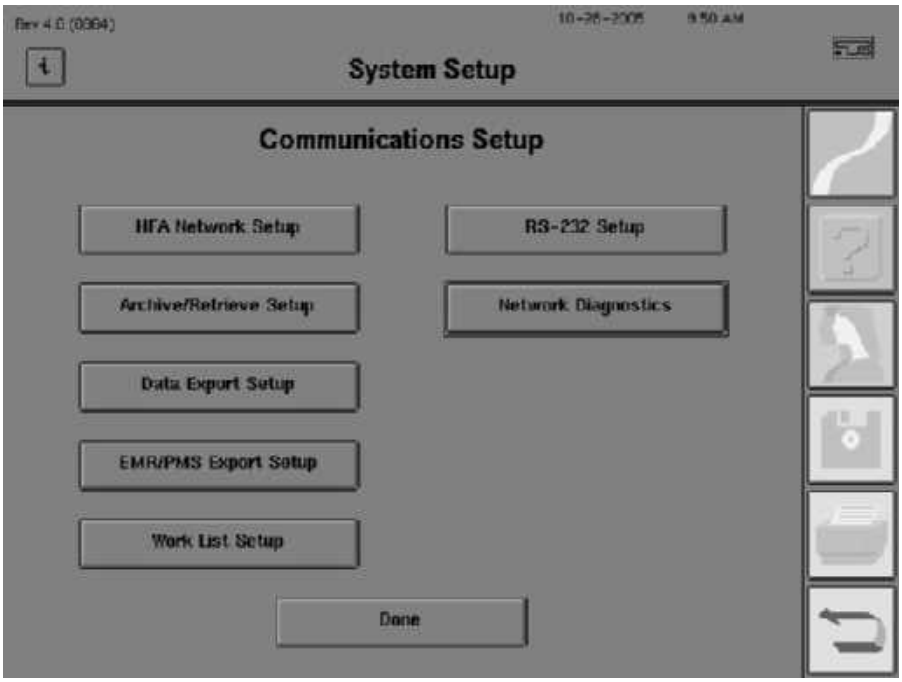

Figure 17. Communications Setup Screen

3. Click on the **Data Export Setup** button. The following screen will be displayed:

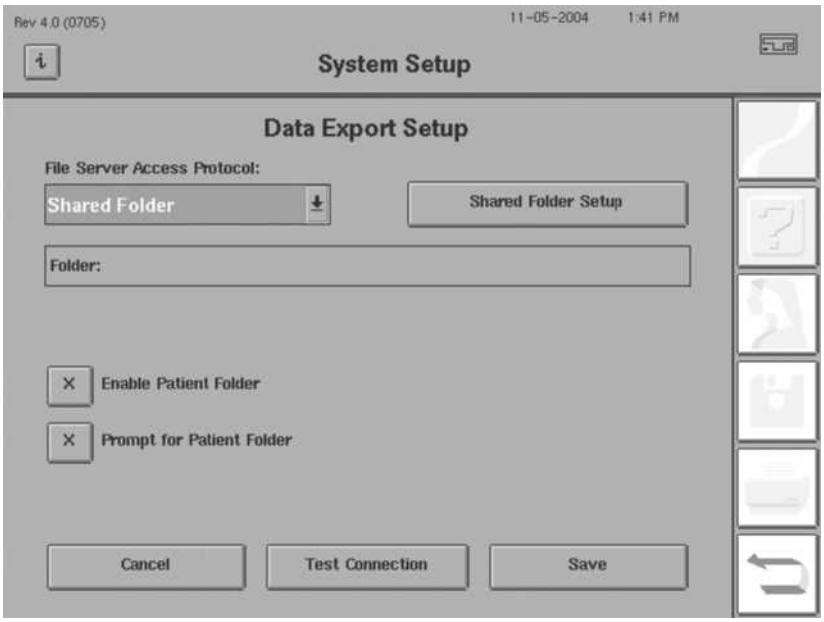

Figure 18. Data Export Setup Screen

4. Choose the **Shared Folder Setup** button. The following screen will be displayed:

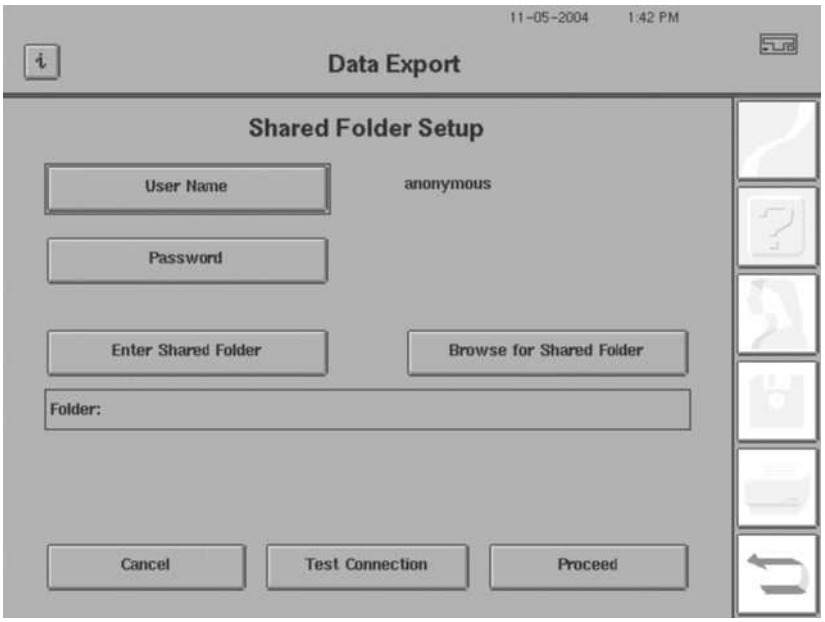

Figure 19. Shared Folder Setup Screen

5. Click on **User Name;** enter in the user name of **anonymous**
6. Click on **Password;** and clear out the password field
7. Click on **Enter Shared Folder**. The following screen will be displayed:

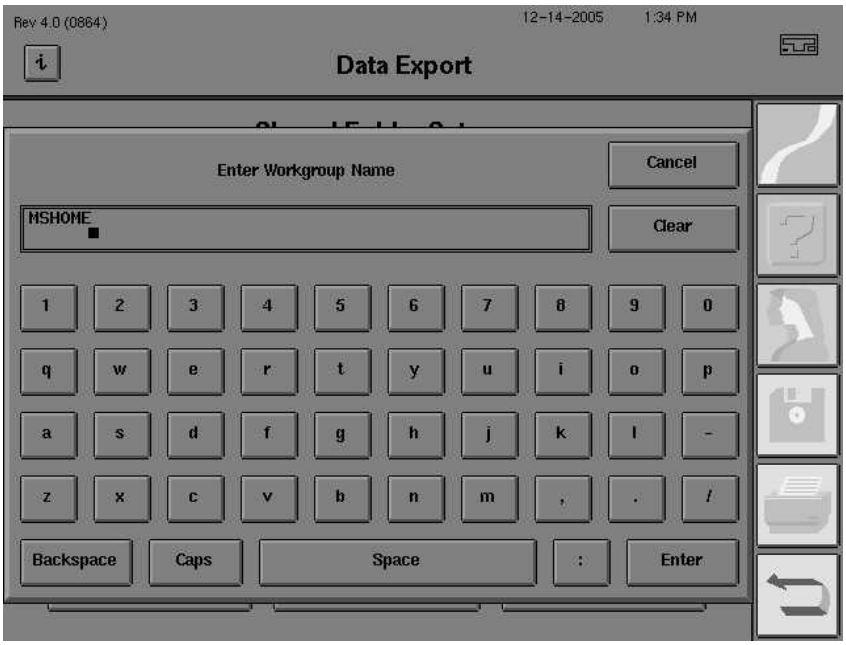

Figure 20. Enter Workgroup Name Screen

8. Type in the **Workgroup Name** that you got from your laptop and press **Enter**. It will then display a screen asking you to type in the **Path to the Shared Folder**. The following screen will be displayed:

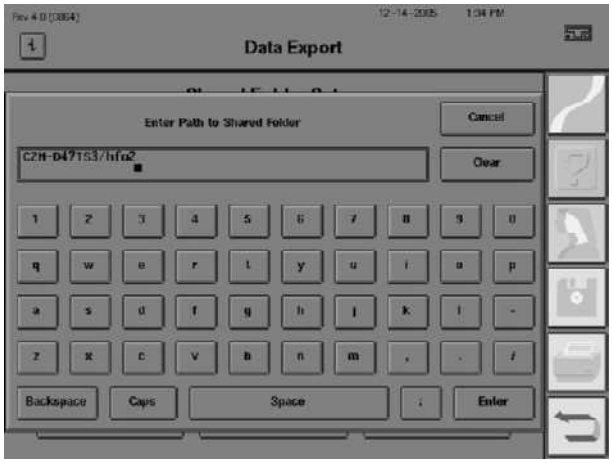

Figure 21. Enter Path to Shared Folder Screen

9. Type in your **Computer Name** followed by a **forward slash (/),** then **HFA** and press **Enter**.

   Congratulations! You have now set up the HFA to talk to the HFA folder you created on your desktop. Now proceed to **E) Testing.**

E) Testing

Machine Verification

1. On the HFA, click on the **System Setup** button.
2. Click on the **Communications Setup** button. The following screen will be displayed:

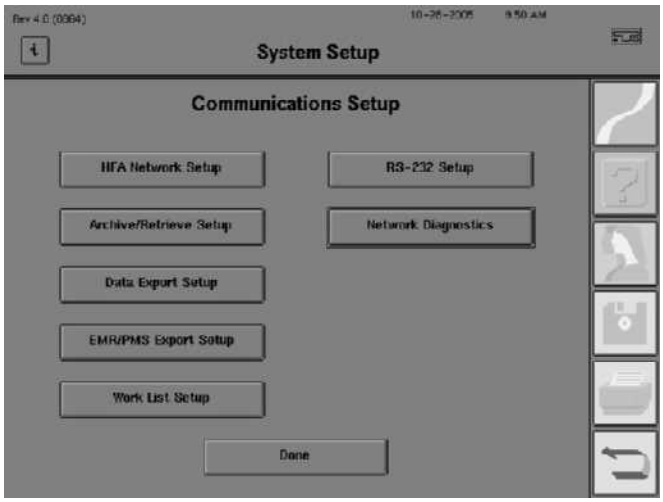

Figure 22. Communications Setup Screen

3. Click on the **Network Diagnostics** button. The following screen will be displayed:

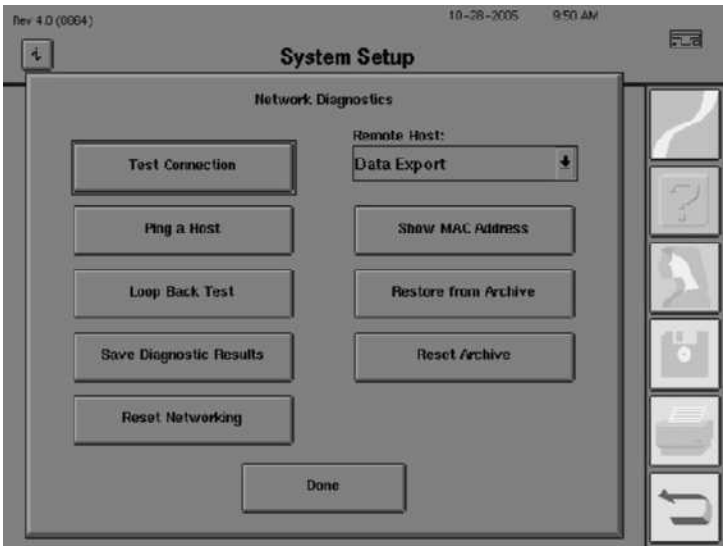

Figure 23. Network Diagnostics Screen

4. Click on the **Test Connection** button. The following screen will be displayed:

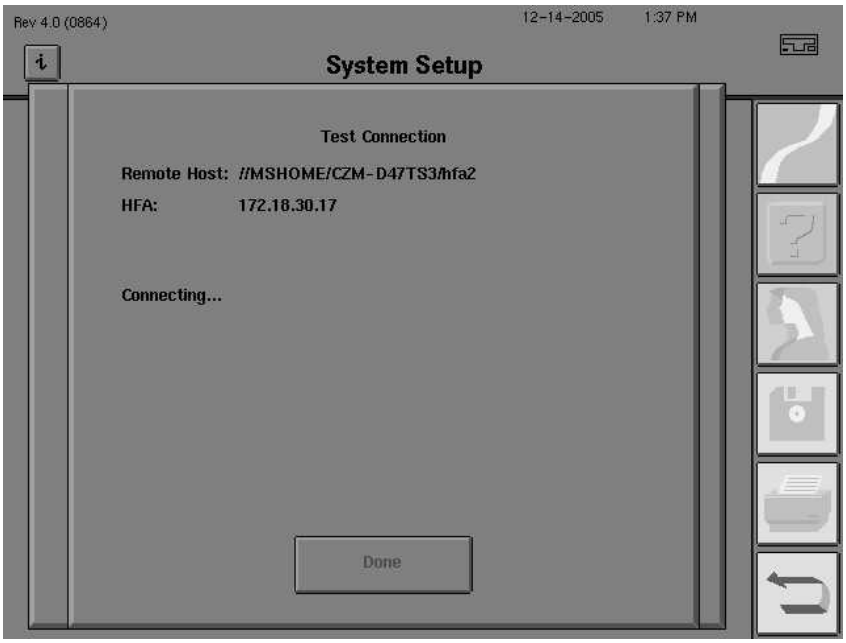

Figure 24. Test Connection Screen

5. If the test is successful, you will see the following screen showing that the HFA machine verified and completed the steps listed in the screen below. If one or more tests are not successful, please recheck all of your settings and try again.

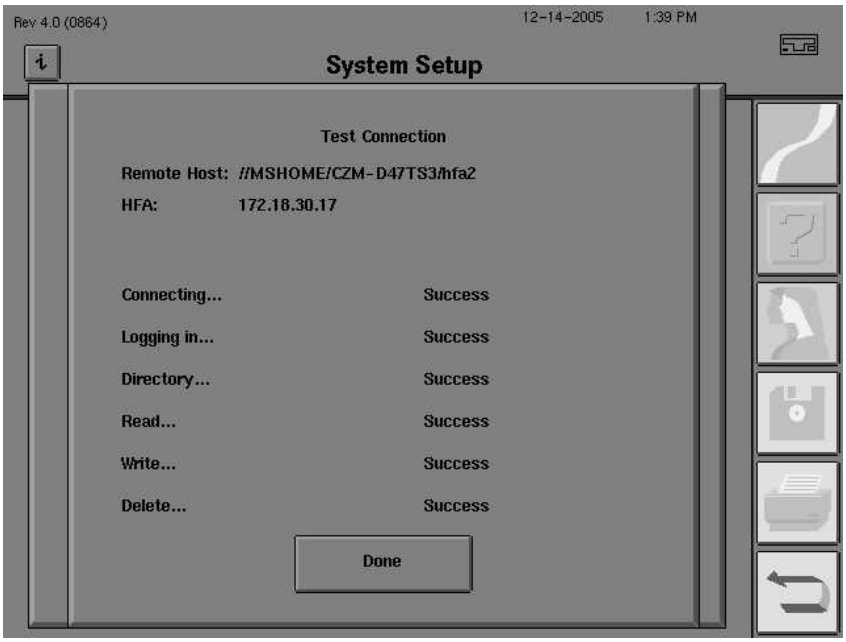

Figure 25. Test Connection Results Screen

Operator Verification

1. On the HFA, click on the **File Functions** button. The following screen will be displayed:

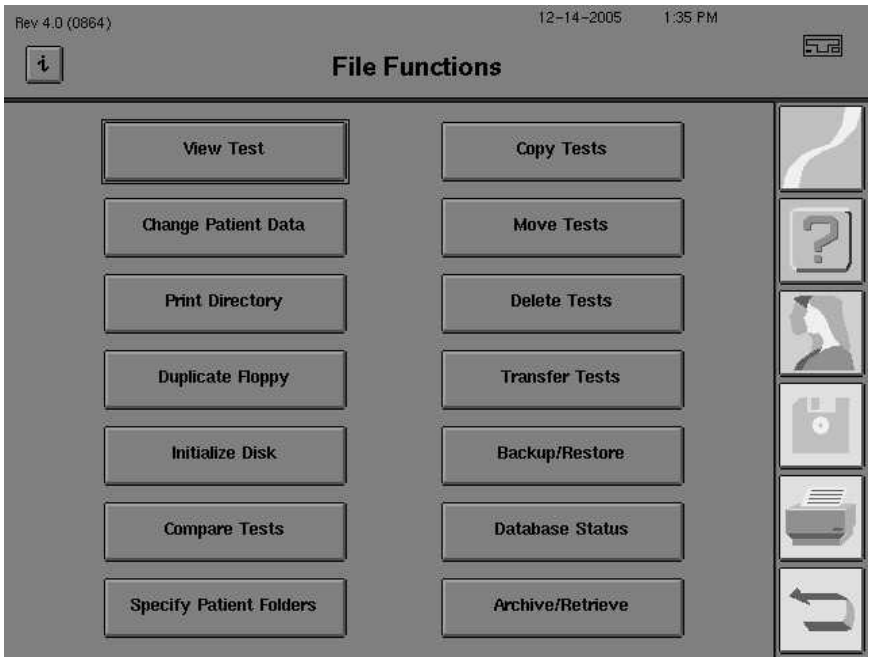

Figure 26. File Functions Screen

2. Click on the **Transfer Tests** button. The following screen will be displayed:

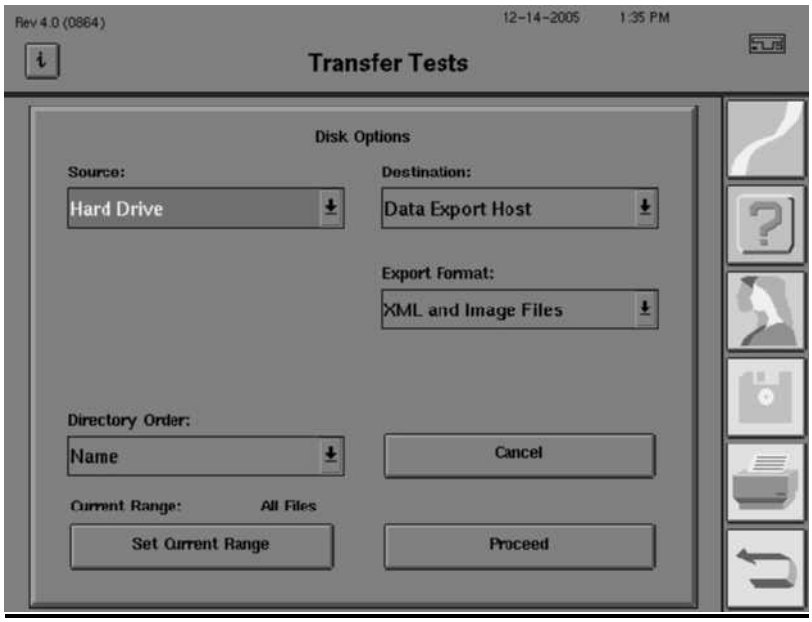

Figure 27. File Functions Screen

3. Click on the **Proceed** button. The following screen will be displayed:

Figure 28. Enter Name to Find Screen

4. Do not type anything in. Instead, click on the **Enter** button. The following screen will be displayed:

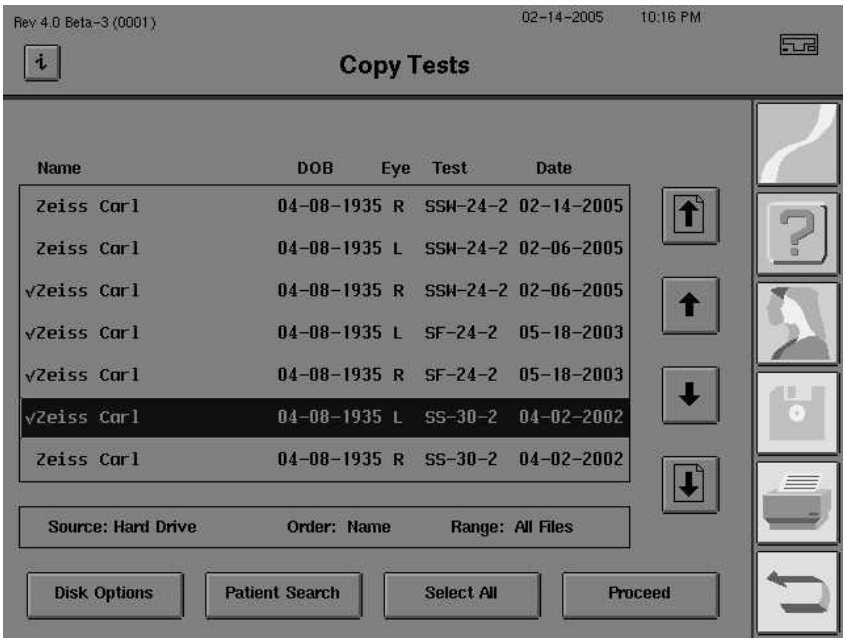

Figure 29. Copy Tests Screen

5. Select an exam from the list and click on the **Proceed** button. The following screen will be displayed:

Figure 30. Transfer Tests Screen

6. Click on the **Yes** button. If the transfer is successful, the following screen will be displayed:

Figure 31. Transfer Tests Successfully Screen

7. Open the **HFA** folder on your laptops' desktop and verify that the test transmitted. Show the customer the successfully transferred test. It will display the screen below if successful:

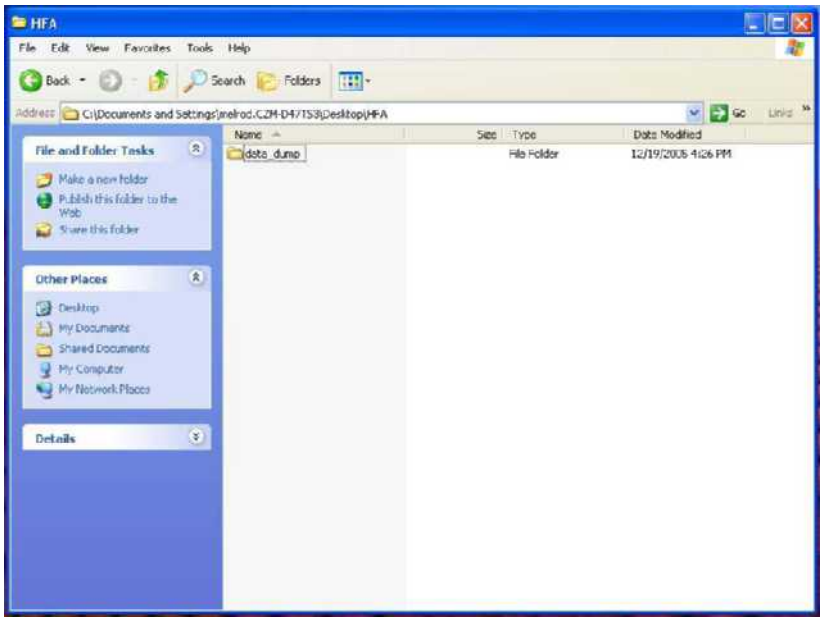

Figure 32. HFA Folder on the Laptop Screen

- data_dump = Patient's Last Name, First Name, DOB

8. Open the folder created in the HFA folder. The following screen will be displayed:

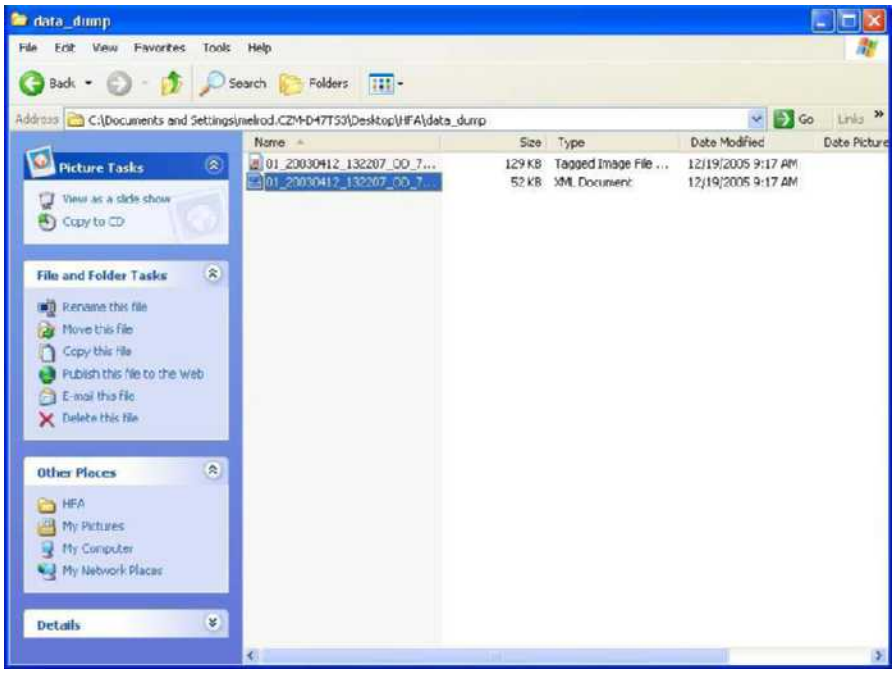

Notes:

- *If the customer has any further questions, please ask them to contact their IT professional.*
- *Set your laptop's IP configuration back to the way it was configured.*

CARL ZEISS MEDITEC

SERVICE BULLETIN

Instrument:	**Humphrey Field Analyzer II-i**	No.:	**FA2i-036**
Subject:	**New Motor Driver Board (P/N 61190)**	Date:	**25 Oct 06**
Status:	**Informational**	Pages:	**1**

General Information

This service bulletin describes the release of a new motor driver board. The new motor driver board (MDB) can only be installed in the HFA II-i.

Various integrated circuits used on the existing MDB, are no longer manufactured.

The new MDB, P/N 61190, is a replacement for the existing MDB P/N 48530-3. Refer to "Motor Driver Board Compatibility" below.

Motor Driver Board Compatibility

Please observe the following when ordering or replacing P/N 61190:

1) After installing P/N 61190, ensure that system application software revision 4.1 or greater is installed. The new MDB will not operate without revision 4.1 or greater software. Review Service Bulletin FA2i-005i for software compatibility issues.

2) The new MDB (P/N 61190) can directly replace the existing MDB (P/N 48530-3), but only used in combination with 4.1 or greater application software.

3) The existing MDB (P/N 48530-3) can be used to replace the new MDB (P/N 61190), and will work with any HFA II-i application software revisions that are compatible with the system.

Post Replacement Follow up

After installing P/N 61190, ensure that you follow the steps outlined in Table 3.1 of the service manual.

CARL ZEISS MEDITEC

SERVICE BULLETIN

Instrument:	**Humphrey Field Analyzer II-i**	No.:	**FA2i-038A**
Subject:	**CPU/Back Plane Enclosure (P/N 60673)**	Date:	**24 Jul 07**
Status:	**Informational**	Pages:	**1**

This bulletin replaces Service Bulletin FA2i-038

General Information

Obsolete components on the HFA II-i back plane required several new releases:

New Part Number	Description
60673	CPU and enclosure
60674	CPU/back plane enclosure and shipping container
61753	BIOS SBEP110J software install disk
60138	HFA2i Application Software Revision 4.1 Installation Disks
59494	HFA2i DST Software Revision 4.1 Installation Disks

CPU/Back Plane Changes

The new back plane uses new video controller components, touch screen control components and other new components. **The new back plane and the original back plane are not to be interchanged**. If you determine that a back plane is defective on an old CPU/back plane enclosure P/N 51072, you must replace the complete CPU/back plane enclosure with the new CPU/back plane enclosure (P/N 60673).

If a CPU/back plane enclosure is changed, HFA2i software revision 4.1 or newer, **Must Be** loaded on the instrument, after the hardware installation. See Service Bulletin FA2i-**005x** for details on software changes.

Note - *Backplane or CPU failures* ***Must Be*** *replaced with the new complete CPU and enclosure assembly.*

BIOS Program Changes

Due to software setup changes for the video controller set, a new BIOS configuration is required for use with the CPU/back plane enclosure. The new BIOS is compatible with both the new and the old (P/N 51072) CPU/back plane enclosure assemblies. The new BIOS is called the SBEP110J BIOS. All new CPU enclosures have the SBEP110J BIOS pre-installed. If for some reason you find it necessary to reload the BIOS for either CPU/back plane enclosure, it can be loaded via the SBEP110J BIOS software floppy disk. See Service Bulletin FA2i-**005x** for details on software changes.

Diagnostic Service Tool Software Changes

A new Diagnostic Service Tool (DST) was required to function with the hardware/software changes mentioned above. The DST is backwards compatible with all viable hardware and software combinations.

CARL ZEISS MEDITEC

SERVICE BULLETIN

Instrument:	**Humphrey Field Analyzer II-i**	No.:	**FA2i-039**
Subject:	**New BIOS Utility Disk**	Date:	**30 Oct 06**
Status:	**Informational**	Pages:	**1**

General Information

New components on the HFAII-i back plane required release of a new BIOS Utility Disk. The SBEP110J BIOS disk was designed to support both the old and new back plane. The SBEP110J BIOS is compatible with all EMI CPU/Back Plane & Enclosures and Motor Driver Boards.

New Part Number	Description
61753	BIOS SBEP110J Software Installation Disk

Notes: *1) The only circumstance that requires loading the SBEP110J BIOS is suspicion of corruption to the existing BIOS.*
2) The SBEP110J BIOS will be loaded on all new EMI CPU/Back Plane & Enclosures, part number 60673.

To Load the BIOS SBEP110J

1) In the Advanced CMOS Settings of the BIOS setup, set the instrument BIOS boot order to read first from the floppy disk.
2) Turn the instrument power *Off*. Turn *On* the HFA II-i (with the SBEP110J disk in the drive).
3) The batch file on the disk will load and execute the new SBEP110J BIOS code.

Note: *If you are overwriting the SBEP103B BIOS, the boot order will automatically be set. If you are overwriting the SBEP110J BIOS, with the SBEP110J BIOS, the boot order will* ***not*** *automatically be reset to the correct order. After loading the BIOS, you will have to manually correct the boot order.*

CARL ZEISS MEDITEC

SERVICE BULLETIN

Instrument:	**Humphrey Field Analyzer II-i**	No.:	**FA2i-040**
Subject:	**Double Image at Startup**	Date:	**27 Apr 07**
Status:	**Informational**	Pages:	**1**

With the implementation of the new CPU box (P/N 60673), there is a possibility that the instrument will startup with a “double image” of the video screen (see Figure 1 and 2). The video display registers are not being set correctly and can cause the display problem. This problem is only expected to occur in 1 out of 300 startups of the system.

If the “double image” occurs, reboot the instrument. The display problem does not result in loss of functionality or impact clinical results.

This issue will be corrected in a future version of software.

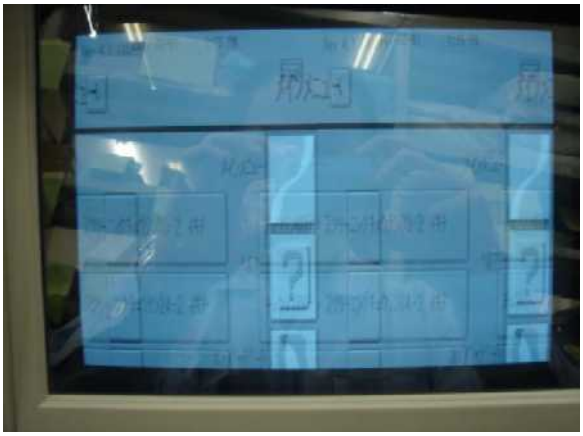

Figure 1.

Figure 2.

CARL ZEISS MEDITEC

SERVICE BULLETIN

Instrument:	**Humphrey Field Analyzer II-i**	No.:	**FA2i-041**
Subject:	**Touch Screen Calibration Changes in Version 4.1**	Date:	**17 May 07**
Status:	**Informational**	Pages:	**3**

With the release of HFA II-i version 4.1 software, two changes were introduced into the touch screen calibration:

1) **Feature**: The calibration of the touch screen, as entered from the System Setup menu and Additional Setup menu, operates as before. However, when the pointing device has been held against the touch screen rectangle, a beep will indicate the new location has been accepted. It will take a few seconds until the beep is heard.

2) **Problem**: During instrument start up, when holding down the patient button, the on-screen message "To calibrate touch screen release patient switch now" will appear within a few minutes (Figure 1). For instruments equipped with version 4.1 software, and certain hardware configurations, it will remain on the screen even after you release the patient button.

Note: *The problem will be corrected in a future version of HFA II-i software.*

There Are Two Problem Work-Around Processes:

1) Use the touch screen calibration process via the System Setup menu. If this is not possible due to the inability to select the required buttons on the touch screen, the operator can use a compatible keyboard to enter the touch screen process, as described below:

   a) From the main menu press F6 to enter the System Setup menu.
   b) Press the tab key 12 times until the Additional Setup is highlighted.
   c) Press the Enter key.
   d) Press the tab key 2 times to highlight the Touch Screen Calibration button.
   e) Press the Enter key.
   f) A warning appears indicating that you are about to calibrate the touch screen with a Continue and a Cancel button.
   g) Press the Enter key to select the Continue choice. The touch screen calibration process will be started.
   h) Follow the on-screen instructions to calibrate the touch screen.

2) Use the hold-down-the-patient-button-at-start-up-touch-screen-calibration process, but **Do Not** follow the instructions displayed on-screen. Instead, follow the instructions below:

   a) Hold down the patient switch and power ON the instrument.
   b) A screen image "To calibrate touch screen release patient switch now" will appear within a few minutes (Figure 1).
   c) For versions of software other than 4.1, this display will disappear when the patient response button is released. Instruments equipped with version 4.1 software and certain hardware configurations, it will remain on the screen even after you release the patient button.
   d) Note the small white rectangle in the upper left corner of the display (indicated by the arrow in Figure 1).
   e) Press the pointing device against the center of the white rectangle, in the **upper left corner** of the display until you hear a beep.

f) The on-screen dialogue indicates, “Press rectangle in Top Left corner” (Figure 2).
g) **Ignore this dialogue**.
h) Note the rectangle in the lower right corner (see arrow in Figure 2).
i) Press the pointing device against the center of the white rectangle in the **lower right corner** of the display until you hear a beep.
j) The touch screen calibration is complete.

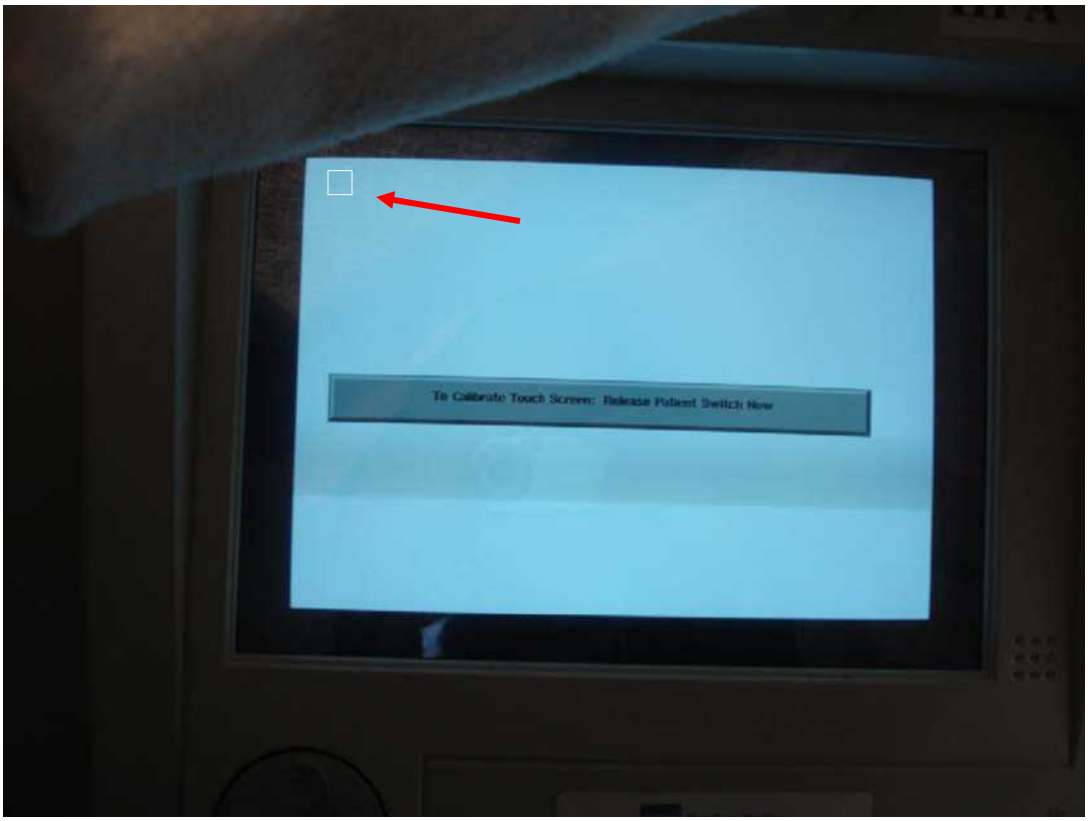

Figure 1. To Calibrate Touch Screen: Release Patient Switch Now

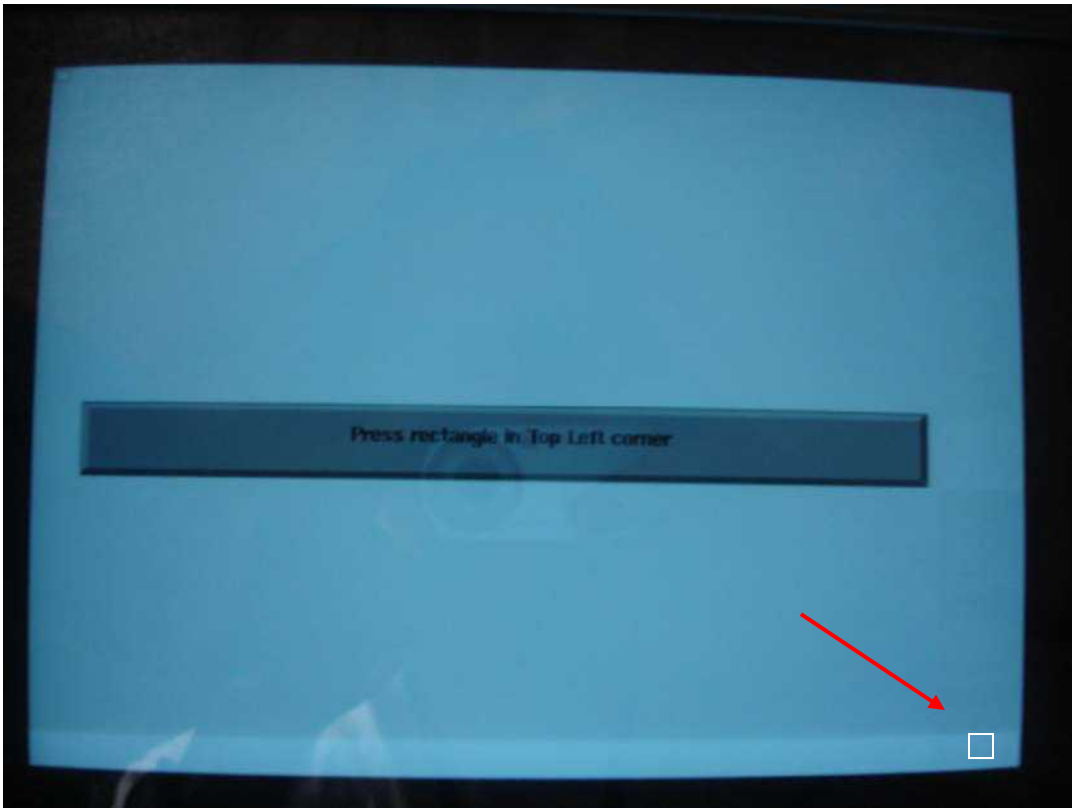

Figure 2. Press rectangle in Top Left corner

CARL ZEISS MEDITEC

SERVICE BULLETIN

Instrument:	**Humphrey Field Analyzer II-i**	No.:	**FA2i-042A**
Subject:	**New Motor Driver Board (P/N 63710)**	Date:	**30 Jul 07**
Status:	**Informational**	Pages:	**1**

This bulletin replaces Service Bulletin FA2i-042

General Information

A new HFA II-i Motor Driver board (P/N 63710) has been released.

The current Motor Driver board (P/N 61190) has logic level incompatibilities between the 3.3 volt devices and microprocessor, which runs on 5.0 volts. The logic levels rarely affected the operation of the instrument, but in some cases the unit will not boot up to the main menu.

The new Motor Driver board (P/N 63710) can be used as a replacement for the previous Motor Driver boards used in the HFA II-i.

Motor Driver Board Compatibility

Please observe the following when ordering or replacing a Motor Driver board:

Motor Driver board:	Replacement For:	Software Version Needed:
P/N 63710	P/N 61190 or 48530-3	Requires Version 4.1 or greater
P/N 61190	No longer issued	Requires Version 4.1 or greater
P/N 48530-3	P/N 63710, 61190, or 48530-3	Works with all versions of software

Post Replacement Procedures

After installing a new Motor Driver board, ensure that you follow the steps outlined in Table 3.1 of the HFA II-i Field Service Guide.

CARL ZEISS MEDITEC

SERVICE BULLETIN

Instrument:	**Humphrey Field Analyzer II-i**	No.:	**FA2i-043**
Subject:	**Version 4.2 Application Software Release**	Date:	**6 Feb 08**
Status:	**Informational**	Pages:	**2**

General Information

Version 4.2 application software offers enhanced networking features and tools, and enhancements to GPA. The features and enhancements are described later in this bulletin.

Version 4.2 is ***not*** a free upgrade; it is purchasable option software, and as such will be ordered and sold through the appropriate sales channels.

Important -

1) ***Do Not*** use version 4.2 software as a troubleshooting tool if the HFA is running software ***less than*** version 4.2. Use a version of software less than 4.2 (for example, 4.1 or earlier). Failure to do so may cause a system crash.
2) If the HFA is running software version 4.2, ***Only*** use 4.2 software as a troubleshooting tool.

Kit Details

Version 4.2 software will be offered in two kit configurations, as shown in Table 1 below. Each kit also contains:

- Version 4.2 Application Software (P/N 63331)
- Remote Configuration Tool (P/N 63334)
- Floppy Disk with sample GPA data (P/N 66563) – not included in Kit B.

Table 1. Version 4.2 Kits

Kit	Content	Product Number
A	Version 4.2 with GPA & NET PRO Certificates	000SW-42-0-GPAPRO
B	Version 4.2 with NET Pro Certificate	000SW-42-0-NETPRO

New Networking Features

- Remote Configuration Tool
- Improved synchronization and retrieve
- Image compression selection
- Retrieval of larger files
- Faster retrieval of smaller files
- Enhanced archive setup

- Export image menu has settings for:
  - Image file type (.tif or .pdf)
  - Image compression
  - CZM XML version
  - Advanced DICOM settings

Remote Configuration Tool

The EasyConnect™ Remote Configuration Tool (RCT) is a CD software tool that runs on a computer, connected to an existing network. RTC configures network settings for HFA –NET and HFA-NET Pro, using shared folder and shared printer setup. The RTC will not configure File Transfer Protocol (FTP).

The Remote Configuration Service will:

- Allow setting up the HFA II-i name from the System Setup > Communication Setup> Network Setup Menu, (limited to 24 characters)
- Remote Configuration can be enabled / disabled from the Network Setup Menu
- Open required ports for use of the Remote Configuration Tool
- Link Local addressing creates an IP address without a DHCP server
- Advanced Network Configuration creates a log file for the remote configuration process.

GPA Enhancements

The new summary report includes a number of new features:

- Both baseline exams
- Rate of Progression Analysis (ROP)
- Follow up exam
- Ability to set single page printout style
- Visual Field Index
- Excludes all exams with a 15 % or greater false positive value from a GPA analysis
- Full threshold tests can now be used as follow up exams

GPA Features

- The Exam Selection screen is more user friendly
- In most cases, GPA analysis for tests with a mean deviation of <= -20 db will no longer display the pattern deviation plot
- Save to floppy diskette at end of test can now be enabled or disabled using the setup > save/transmit options menu
- Deferred exams can be cleared using the setup > save/transmit options menu

CARL ZEISS MEDITEC

SERVICE BULLETIN

Instrument:	**Humphrey Field Analyzer II-i**	No.:	**FA2i-044A**
Subject:	**Power Supply P/N F57974**	Date:	**12 Feb 08**
Status:	**Mandatory – Check Next Visit**	Pages:	**2**

Problem

The HFA II-i Power Supply, P/N F57974, has a potential to fail under moderate load conditions.

Cause

The Power Supply diodes, rated at 100 Volts, can experience voltages exceeding 100 Volts. If the voltage exceeds the 100 Volt rating, the diode(s) may fail, causing the Power Supply to fail as well.

Solution

The Power Supply manufacturer has determined that replacement of the 100 Volt rated diodes, with a 150 Volt rated diodes, prevents diode and Power Supply failure. The manufacturer has incorporated the 150 Volt diodes on all new and reworked Power Supplies.

Power Supply Replacement

To determine if the HFA II-i instrument has an affected power supply:

1) Verify that the instrument serial number is in the range shown in Table 1. If the serial number is **NOT** shown in Table 1, the instrument is not affected. No action is required.

2) If the instrument serial number is in Table 1, inspect the label on the power supply. If the label is as shown in Figure 1, the power supply has the 100 Volt diodes. In this case, replace the power supply.

3) Order part number F57974.

4) If the label is as shown in Figure 2, the power supply has been reworked with the 150 Volt diodes. No action is required.

Table 1: The Affected Serial Number (S/N) Range of HFA II-i Instruments

Model	Serial Number Range
720i	8006 - 8177
740i	16212 - 16550
745i	6131 - 6259
750i	11586 - 11842

Note - *Credit will only be given for Power Supplies that meet the above stated criteria, which have been returned to CZMI for inspection by September 30, 2008.*

Figure 1. Label indicates 100 Volt Rated Diodes (if S/N is in Table 1)

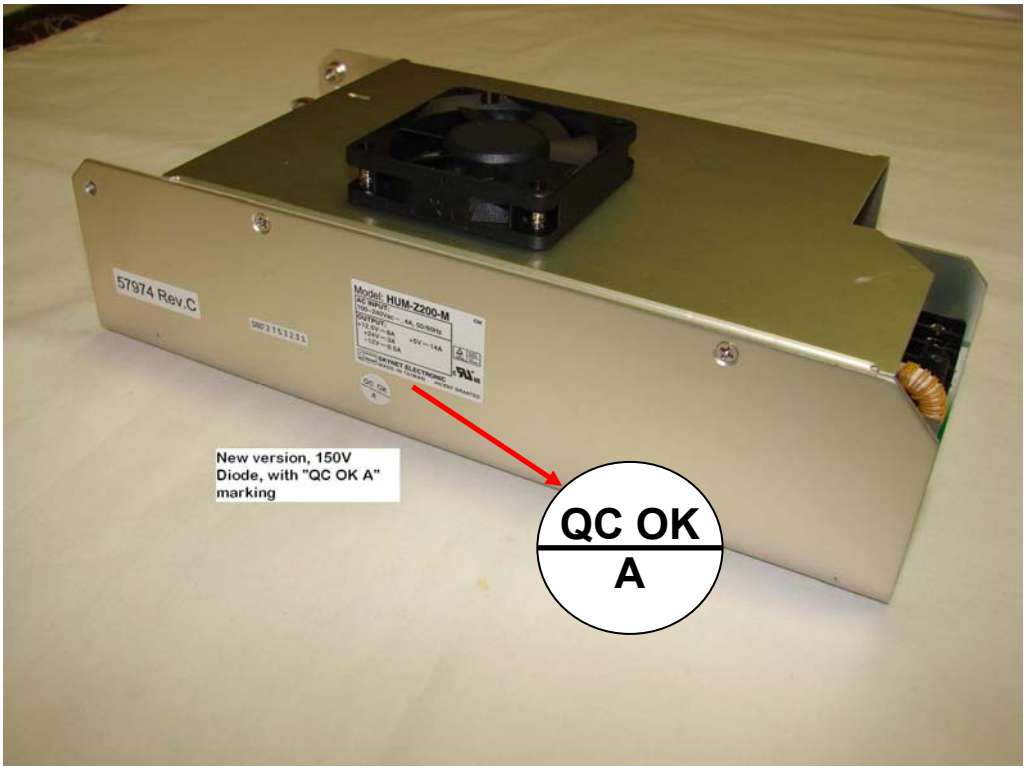

Figure 2. Label indicates 150 Volt Rated Diodes

CARL ZEISS MEDITEC

SERVICE BULLETIN

Instrument:	**Humphrey Field Analyzer II-i**	No.:	**FA2i-045A**
Subject:	**New Power Table and Printer**	Date:	**14 Apr 08**
Status:	**Informational**	Pages:	**7**

This bulletin replaces Service Bulletin FA2i-045

The Series 400 (HPT4) Power Table is now Obsolete. The Series 400 Power Table assembly will have a limited amount of replaceable parts available for repair.

The Series 400 Power Table is being replaced with the Lynx Series Power Table.

PART #	DESCRIPTION	Printer	Table Shipped		
66748-1	120v HFA Power Table	w/Printer	(Assembled)		
66748-2	120v HFA Power Table	No Printer	(Assembled)		
~~66748-3~~	~~230v HFA Power Table~~	~~w/Printer~~	~~(Unassembled)~~		**OBSOLETE**
66748-4	230v HFA Power Table	No Printer	(Unassembled)		
66748-5	120v HFA International Power Table	No Printer	(Unassembled)	[Japan]	
~~66748-6~~	~~120v HFA International Power Table~~	~~w/Printer~~	~~(Unassembled)~~	~~[Japan]~~	**OBSOLETE**

Figure 1 Lynx Power Table

The printer tray is designed to hold a new HFA Printrex Printer (Thermal Line Printer), P/N 66745. The printer is a universal printer that accepts 100 – 240 volts @ 50/60 Hz.

Notes:

1) *The old Printrex printers are not compatible with the new Lynx power table. If there is a need to replace an older-style power table (equipped with a Printrex printer) with the new Lynx power table, a new Printrex printer will also be required.*

2) *Approximately 100 of the first batch of Lynx power tables will not have the disk drive access hole included within the table. For these tables, the instrument will need to be detached from the table in order to access the disk drive cover plate latch.*

The only replaceable parts available for the new Lynx power table are as follows:

PART #	DESCRIPTION
66141	Caster with Lock
67378	Rocker Switch
52537	Power Entry Module, 5 x 20mm
46446	Fuse, 8 amp, SB, Metric, 125 volts, 100 - 120 volt units
50319	Fuse, 6.3 amp, SB, Metric, 250 volts, 220 - 240 volt units
32346-16	Screw M5x16 SOC BTN HD CAP SST
32336-25	Screw M5x25 SOC HD CAP S/BZ
43812	Washer M5 Spring Steel
47611	Washer M5 Flat
28295-40	Screw M4x40 SOC HD CAP S/BZ
14445	Washer M4 Square Cone
22511	Cord Power Hosp Grd 18GA Gray
22581	Cord Power EUROCEE 7/7 10A
42050	Cord Power 90 Deg LH IEC 320 6A 250V
66745	Printer, Thermal Line (Printrex)

Power Table Assembly Instructions

Tools Required

- 50 IN-LB Torque Driver, P/N 67613
- 4mm Torque Driver Bit, P/N 67614
- 3mm Hex Ball Driver, P/N 67615

1) Snap the four casters into the base as shown in Figure 2.

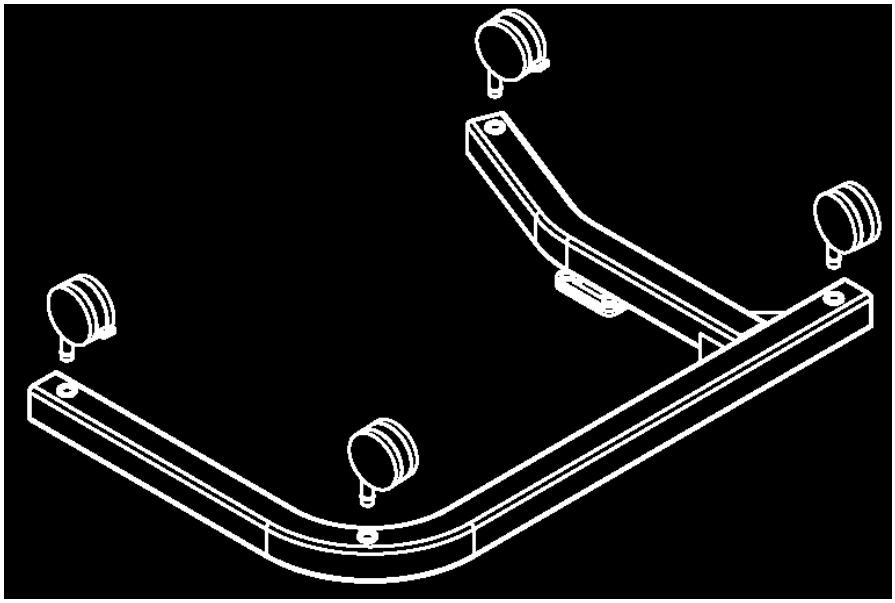

Figure 2 Snap Casters into the Base

2) Flip the base assembly over onto the casters. Place the lift mechanism onto the base, orienting the Power Inlet towards the back of the base as shown in Figure 3. Secure with the M5 x 25 SOC HD CAP Screws / M5 Bell Spring Steel Washers / M5 Flat Washers supplied. Tighten screws with a 4MM Allen (Hex) wrench. Torque to **50-55 IN-LB.

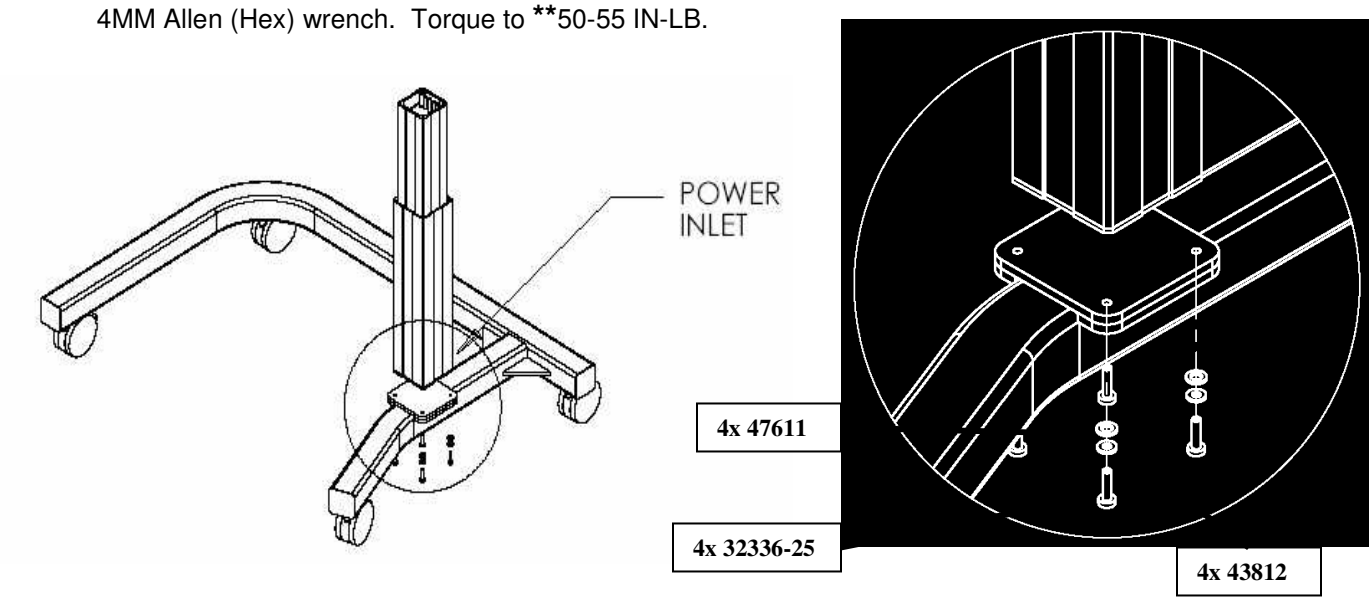

Figure 3 Secure the Lift Mechanism onto the Base

***Note:** *50 – 55 IN-LB is equivalent to 5.78 – 6.36 Newton/Meters or 4.17 – 4.58 FT-LB.*

3) Place the table support tray on top of the lift mechanism as shown in Figure 4. Secure with the M5 x 25 SOC HD CAP Screws / M5 Bell Spring Steel Washers / M5 Flat Washers supplied. Tighten screws with a 4MM Allen (Hex) wrench. Torque to **50-55 IN-LB.

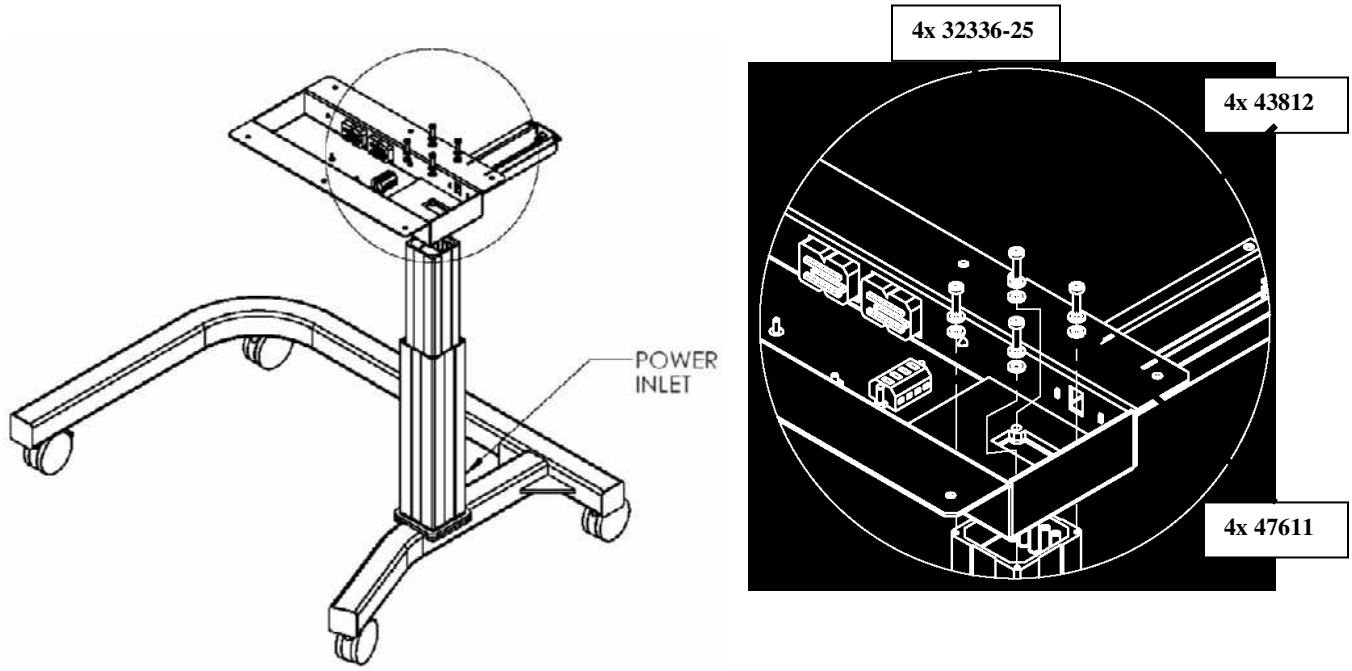

Figure 4 Secure the Support Tray onto the Lift Mechanism

4) Insert the 5-prong plug into the power receptacle on the lift mechanism as shown in Figure 5.

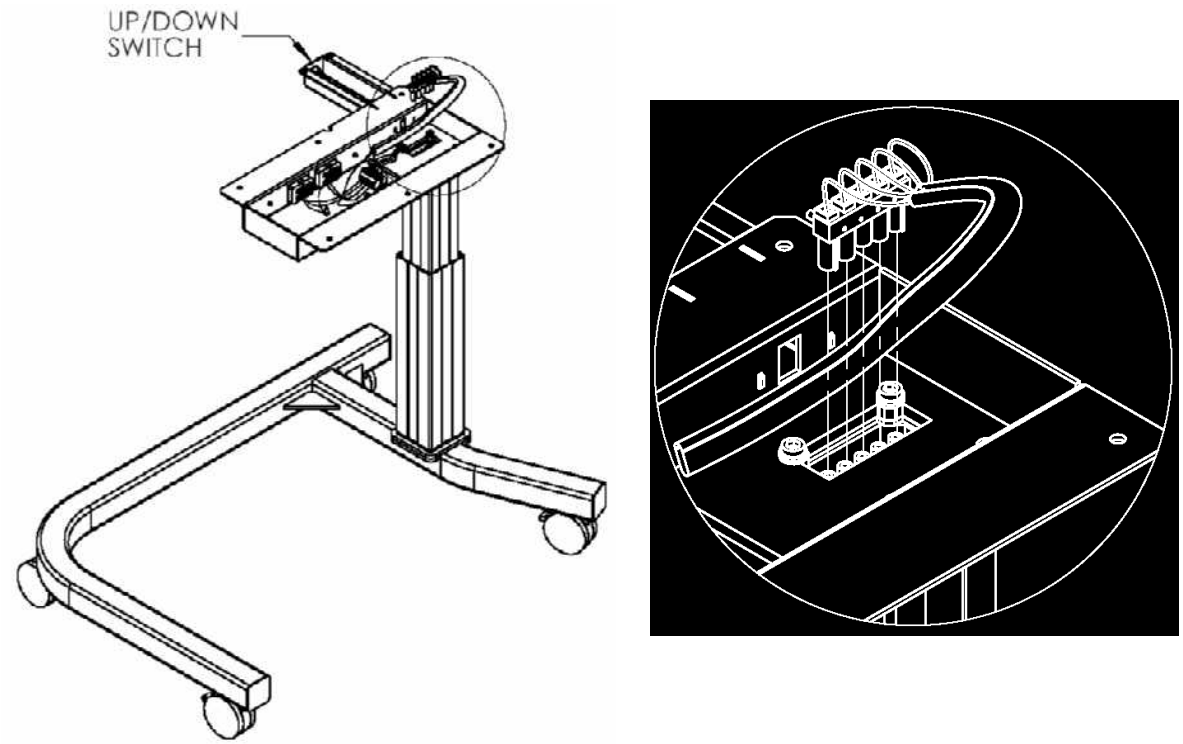

Figure 5 Insert the 5-Prong Plug

Notes: *Prior to installing the HFA table top onto the support tray:*

- *Ensure that the correct fuses are installed for the power mechanism to be tested.*
- *Plug the power cord into the power inlet on the lift mechanism and then plug the power cord into any available power source (see label on the power lift mechanism for the proper power input requirements).*

WARNING – *Do not touch any exposed wire or terminal while the power cord is plugged into the power source.*

Notes:

- *Press the up and down button to test the lift mechanism to ensure that the 5-prong plug is properly seated in the receptacle.*
- *During testing, press the up button and allow the lift mechanism to reach its maximum extension. Disconnect the power cord from the power inlet and observe that there is no slippage of the lift mechanism.*
- *Steps 5 and 6 require two people to perform the task.*

5) Lay the HFA table top upside down on a clean floor being careful not to scratch the surface. Place the assembly onto the table top as shown in Figure 6. Secure with the M5 x 16 SOC BTN HD CAP Screws / M5 Bell Spring Steel Washers supplied. Tighten screws with a 3MM Allen (Hex) wrench.

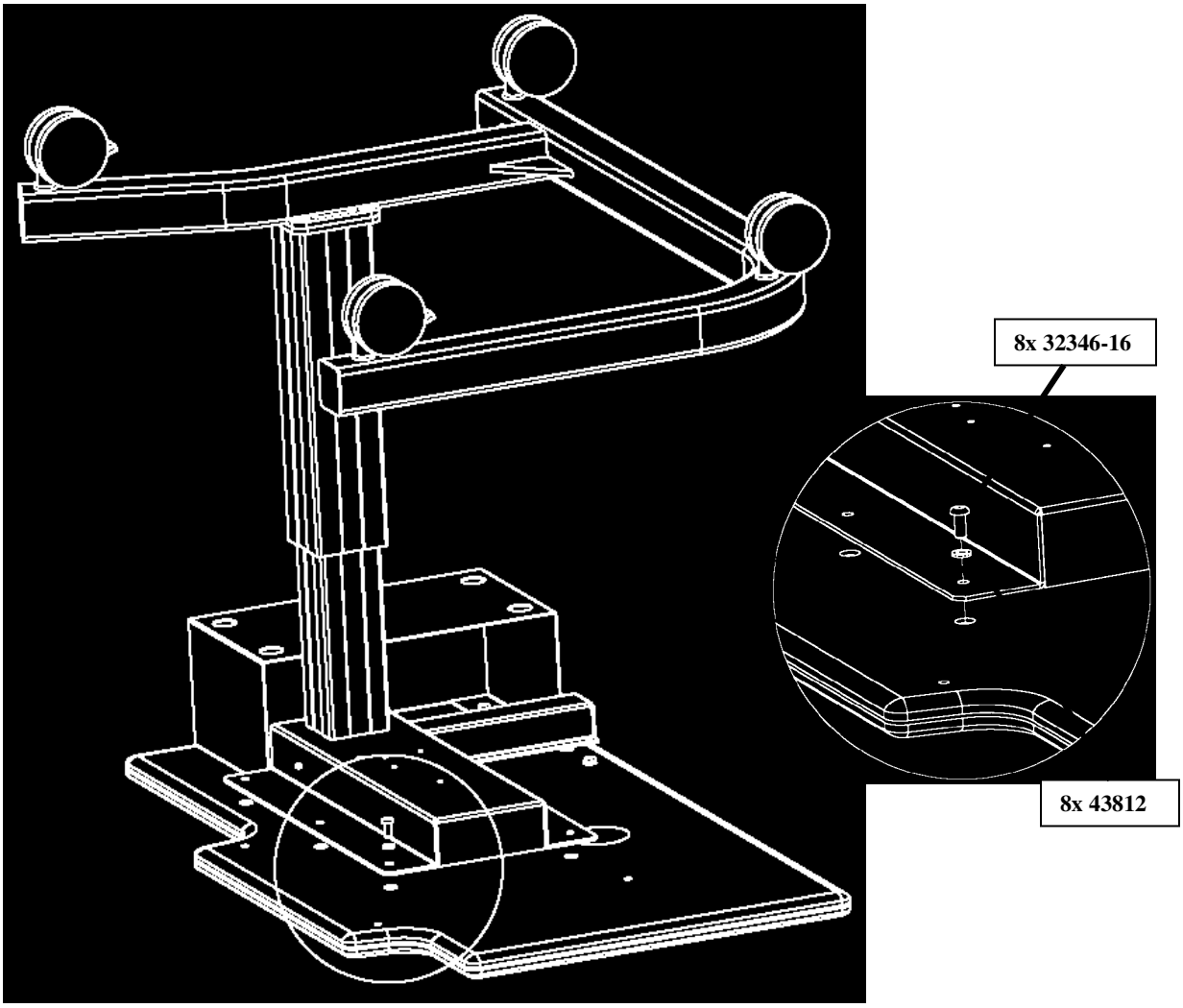

Figure 6 Table Top / Lift Assembly Upside Down

6) Set the table assembly back onto the casters.

Mounting the HFA to the Power Table Instructions

Tools & Hardware Required

- 3mm Allen (Hex) wrench, P/N 30984-3
- Screw M4x40 SOC HD CAP S/BZ, P/N 28295-40 (2 included w/table)
- Washer M4 Square Cone, P/N 14445 (2 included w/table)

1) With the instrument on the floor, remove the two feet as shown in Figure 7 from the bottom of the HFA by removing the two screws securing them to the instrument. (Save the 2 removed screws for future use)

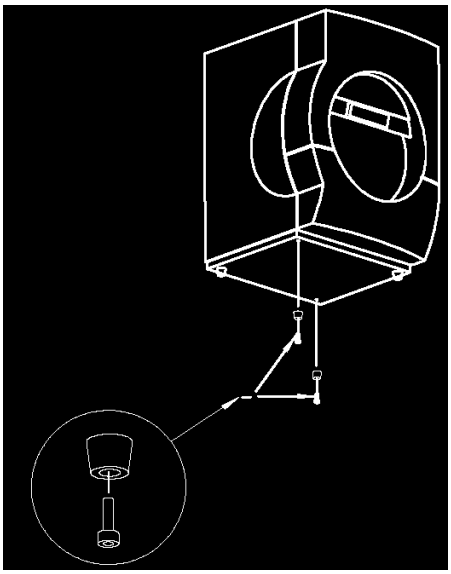

Figure 7 Remove the Two Feet from the Instrument

2) Put the two feet that were removed in step 1 onto the table as shown in Figure 8 and place the instrument on top of the table.

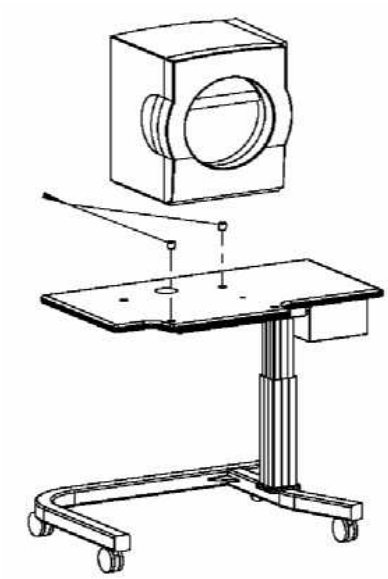

Figure 8 Place Feet and Instrument on Top of Table

3) Install the two M4x40 screws and M4 cone washers (provided) to secure the feet and the instrument to the table as shown in Figure 9. Tighten the screws with a 3mm Allen (Hex) wrench.

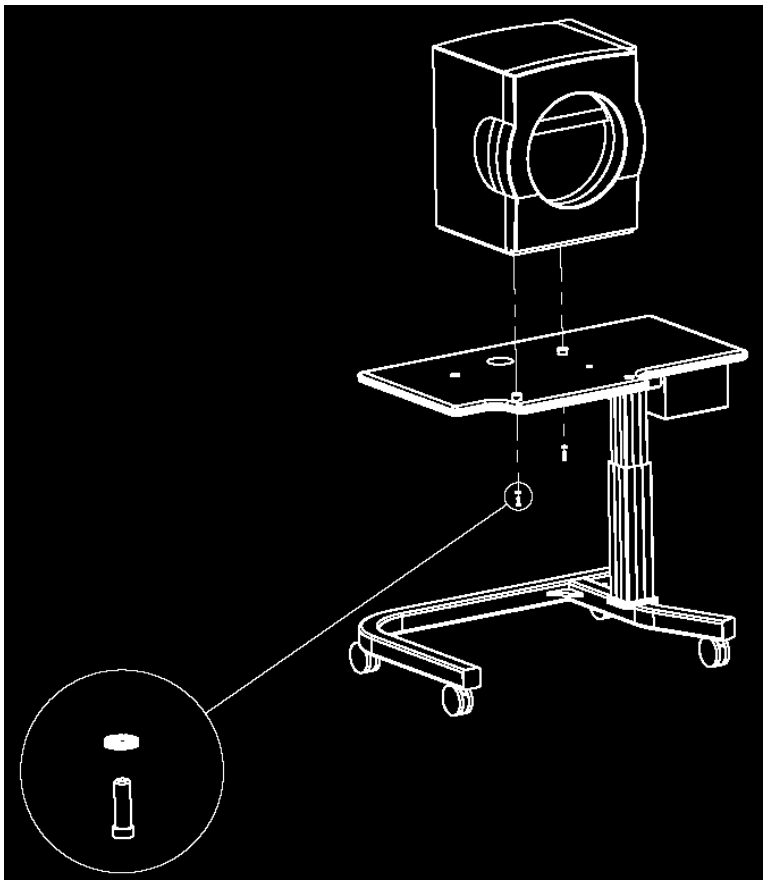

Figure 9 Secure Instrument to Table With Two Screws & Washers

CARL ZEISS MEDITEC

SERVICE BULLETIN

Instrument:	**Humphrey Field Analyzer II-i**	No.:	**FA2i-046**
Subject:	**New Edge Detectors for Projection Assembly**	Date:	**25 Apr 08**
Status:	**Informational**	Pages:	**3**

General Information

The current edge detector assemblies used with the film and glass wedges and the Y turret motor are obsolete.

New edge detector assembly part numbers have been created and released. The new edge detector assemblies are backward compatible on all HFA II-i units.

The new HFA II-i detector assemblies are defined in **Table 1** below.

Edge Detector Usage

Table 1. New Edge Detector Usage

Detector Part Number	Where Used
P/N 67418	Y Turret assembly
P/N 67417	Film (J) and glass (I) wedge assemblies

Both of the new detector assemblies contain a 0.060 inch thick spacing washer to correctly position the detector. See **Figure 1** and **Figure 2** for washer placement.

Replacement Procedures

Ensure that you place the spacing washer in the correct position as indicated in **Figure 1** and **Figure 2** during assembly of the detectors.

Note – *Improper spacing washer placement can create motor calibration errors.*

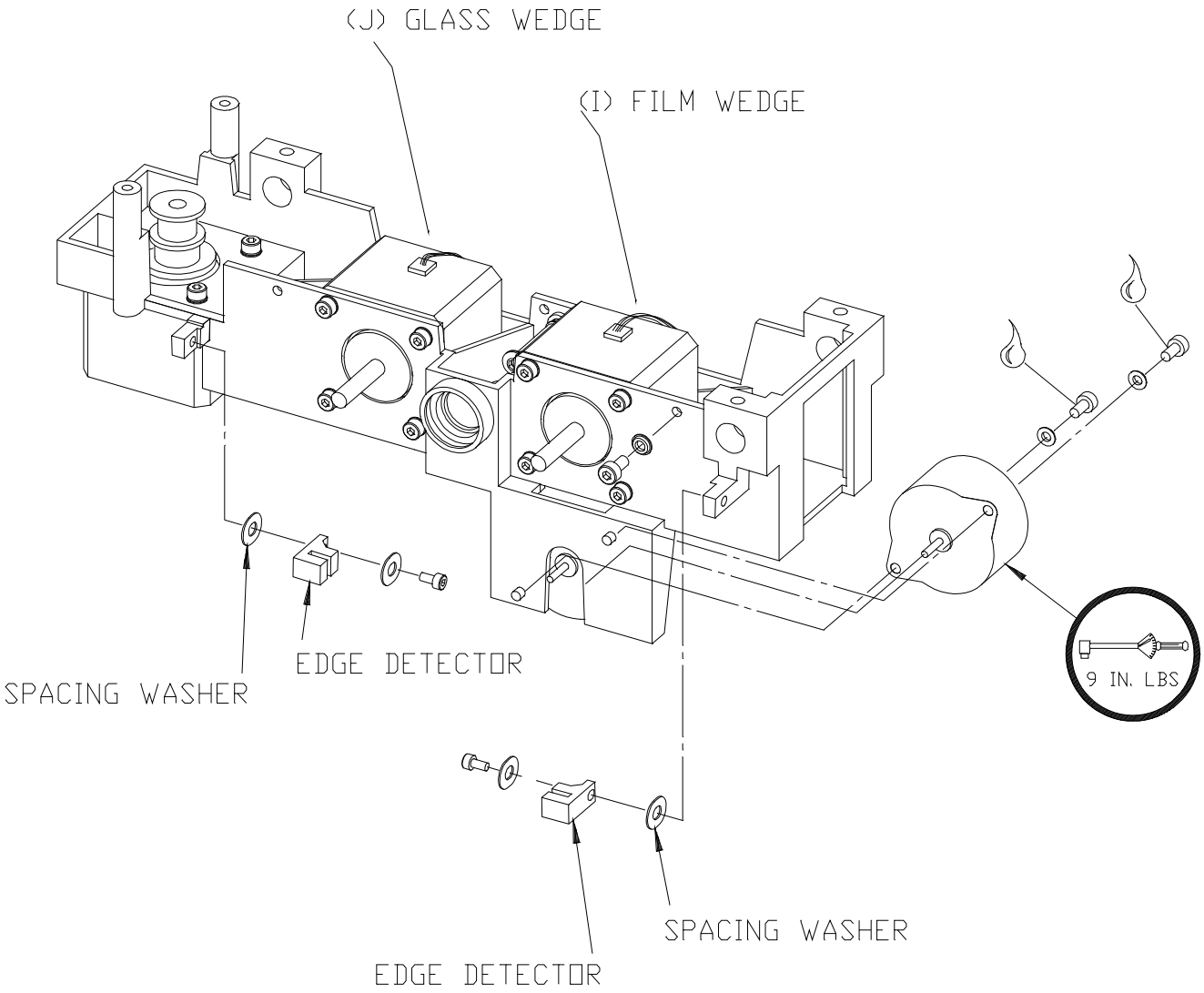

Figure 1. Glass & Film Wedge Detectors P/N 67417 - Note Spacing Washer Placement

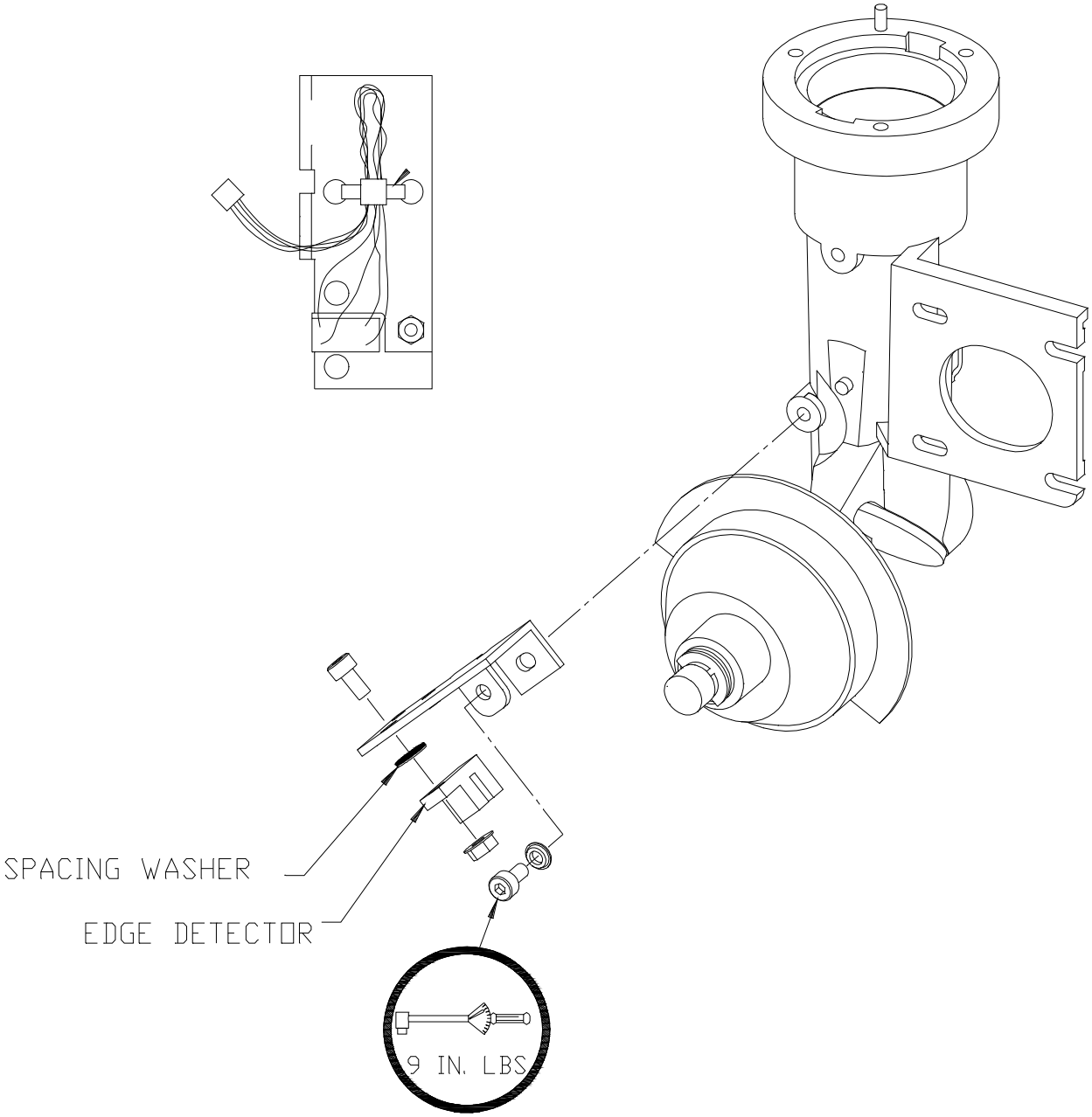

Figure 2. Y Motor Turret Detector P/N 67418 – Note Spacing Washer Placement

Field Analyzer II - *i*

DESCRIPTION	PART #
Common Supply Items	
Diskettes, 3-1/2", 1.44MB DSHD, Formatted (Box of 10)	48024
Diskette, Magneto Optical, 230 MB, Formatted	33905
Diskette, Magneto Optical, 640 MB, Formatted	51474
Dust Cover	51799
Eyepatch, Black, w/Elastic Strap	08025
Patient Button Assy	29575
Primer, HFA2	57400
Lamps, Fuses	
Projection Lamp Assy	30323
Lamp (for Yellow Bowl) 12V, 20W	29954
Yellow Lamp Assy	30071
Fuses:	
Fuse, 4 Amp, 250V, Slo-Blo, Metric, 100-120V (Main Line)	21453
Fuse, 2 Amp, 250V, Slo-Blo, Metric, 220-240V (Main Line)	21455
Fuse, 6.3 Amp, 250V, Fast-Blo, Metric (Pwr Supply)	30241
Fuse, 3 Amp, 250V, 2AG (Z-Axis Monitor)	30298
Fuse, 8 Amp, 125V, Slo-Blo, Metric, 100-120V units (HPT4 Table)	46446
Fuse, 6.3 Amp, 250V, Slo-Blo, Metric, 220-240V units (HPT4 Table)	50319
Fuse, 2 Amp, 250V, Slo-Blo, Metric, 100-120V units (Printrex Prtr)	21455
Fuse, 1.6 Amp, 250V, Slo-Blo, Metric, 220-240V units (Printrex Prtr)	32314
Other Accessory Items	
Power Cord, CEE 7/7, 10A.5M, 220-240V (HFA II-i to Power Table)	30147
Power Cord, 100-120V (Pwr Table to Wall Outlet	22511
Power Cord, CEE7/7, 220-240V (Pwr Table to Wall Outlet)	22581
Power Cord, 90LH, IEC 320, 6A 250V, 36" (HFA II-i to Power Table)	42050
Keyboard w/Touch Pad (includes adapters)	51467
Keyboard Adapter Cable, Male, DB9 to Male Mini-DIN	51112
Trial Lens Holder, Misc. Parts:	
Retaining Ring	08112
Spring, Compression	29520
Flag, Brkt, Edge Detector	29476
Edge Detector Assy	29581
Ball .250 SST	29524
Belts, Cables, Switches	
Belts, Stepper Motor:	
Belt, Chinrest (X) Horz., (370/2.03/6.0)	29551
Belt, Chinrest (Y) Vert., (102/2.03/6.0)	29395-102
Belt, Turret (X) Horz., (100/2.03/6.0)	29395-100
Belt, Carriage (F) Focus, (195/2.03/6.0)	29395-195
Belt, Turret (Y) Vert., (112/2.03/6)	29395-112

Field Analyzer II - *i*

DESCRIPTION	PART #
Cable, Serial Transfer, HFA I to HFA II - i	52416
Cable, Serial Transfer, HFA II to HFA II - i	52417
Cable, Printer, Parallel, 4' (HP LaserJet, Lexmark and Brother Printers)	51472
Cable Assy, Brightness Pot	29695
Other Miscellaneous	
Fan Assy, Bottom	29793
Filter, Fan, Bottom	29381
Filter, Fan, Top	30561
Door, Fan, Filter	29380
Door Assy, Lamp Access, w/Caution Label	29991
Brightness Detector Misc. Parts:	
Washer, Wavy	06711
Window, Glass, Spot Intensity (Blue)	08105
Filter, Plastic, CIE Correction (Green)	08098
Stepper Motor Assemblies:	
Motor, (X) Stepper, Chin/Headrest	29677
Motor, (Y) Stepper, Chinrest	29678
Motor, Stepper, Shutter	29584
Motor, (X) Stepper, Turret	29583
Motor, (Y) Stepper, Turret	29582
Motor, (Film or Glass Wedge, Focus) Stepper	29583
Assy, Shutter	30106
Assy, IR, LED	52755
Assy, Fixation PCBA	52756
Edge Detector Assemblies:	
Edge Detector, (Y) Axis	30442
Edge Detector, (X) Turret	29581
Edge Detector, Film and Glass Wedges	30453

DESCRIPTION	PART #

Major Assemblies

PCBAs, CPU/Backplane in Enclosure, w/shipping box	F 51804
Shipping Box for CPU/Backplane Enclosure	51978
CPU/Backplane and Enclosure PN 51072	Order F 51804
PCBA, Backplane PN 49700	Order F 51804
PCBA, CPU, 433 MHz PN 51477	Order F 51804
PCBA, CPU, 433 MHz PN 55392	Order F 51804
DIMM, 64MB, PC100, NonECC	49443
PCBA, Motor Driver	F 48530-3
PCBA, Interconnect, Projection System	29550
PCBA, Interconnect, Patient Support Assy	29570
PCBA, Brightness Detector Assy	50610
PCBA, Chinrest Switch Assy	29610
PCBA, Fixation	48820
Assy, Power Entry Module, w/Cables	29735
Assy, Trial Lens Holder (720i)	49681-1
Assy, Trial Lens Holder (740i/750i)	49681-23
Assy, ND Film Wedge	29981
Assy, ND Glass Wedge	29969
Assy, Color Wheel (730i/735i/740i)	29979-2
Assy, Color Wheel (745i/750i)	29979-3
Assy, Aperture Wheel	29978
Assy, Cable, Turret, Flex (3 Flex Cables w/Brackets)	29971
Assy, Background Light , Left (replace left and right as a set)	29990
Baffle, Background Light, Left	48482
Assy, Background Light, Right (replace left and right as a set)	29989
Baffle, Background Light, Right	48481
Assy, Chinrest Switch	29992
CCD Camera Assy	F 47117
CCD Camera Kit, including Support PCBA and cable	F 53850
Drive, Hard, IDE 20GB (Formatted, but no software loaded)	F 52036
Drive, Floppy, 3-1/2", 1.44 MB High Density TEAC	29244
Drive, Floppy, 3-1/2", 1.44 MB High Density SONY	53355
Drive, Magneto Optical, 3-1/2" ATAPI (uses 6-32 screws to mount)	51476
Drive, Magneto Optical, 3-1/2" ATAPI (uses M3x6 screws to mount)	54568
NOTE: Refer to Service Bulletin FA2i-003x for more information regarding MO Drives.	
Drive, Magneto Optical Upgrade Kit (720, 740, 745)	52969

Field Analyzer II - *i*

	DESCRIPTION	PART #
	Touchscreen, 12" CRT (cannot be used with 29320-4 CPU PCBA)	30411
	Monitor Assy, Z-axis (CRT, Yoke, & PCBA)	30434
	CRT, 12" P4	30432
	PCBA, CRT, Z-Axis	30086
	Yoke, Z-Axis	30087
	Power Supply, with added bracket and fan, for HFA2i's before 11/04	F 51487-1
	Power Supply Fan	52363
	Power Supply, for HFA2i's after 10/04	57974
	Projection System Assemblies:	
†	Projection System Assy (720i)	29994-1
	Projection System (740i)	F 29994-2
	Projection System (750i)	F 29994-3
	Patient Support Assy (Complete with ChinRest/Trial Lens Assy*):	
†	Patient Support Assy (720i)	29980-1
	Patient Support Assy (740i/745i/750i)	29980-23