CHROMA Colorimeter
Model 252

Operator's Manual

Copyright 1996 Sherwood Scientific Ltd., All rights reserved

Contents

Section 1
Introduction

1.1 Accessory List

Cat. No.	Item	Qty
252 91 501	252 Operator's Manual	1
950 12 001	Sample holder	1
471 88 300	Pack of 100 cuvettes	1
001 44 137	Spare lamp	1
	AC/DC voltage adaptor	1

1.2 Installation

1. Unpack the instrument and accessories.
2. Check that all the items on the accessory list have been delivered. Contact your distributor if you have any problems.
3. Connect a suitable plug to the AC/DC adaptor mains cable. Check that the correct colour coded leads are connected to the plug terminals. Follow the plug manufacturer's fitting instructions.

Rear Panel

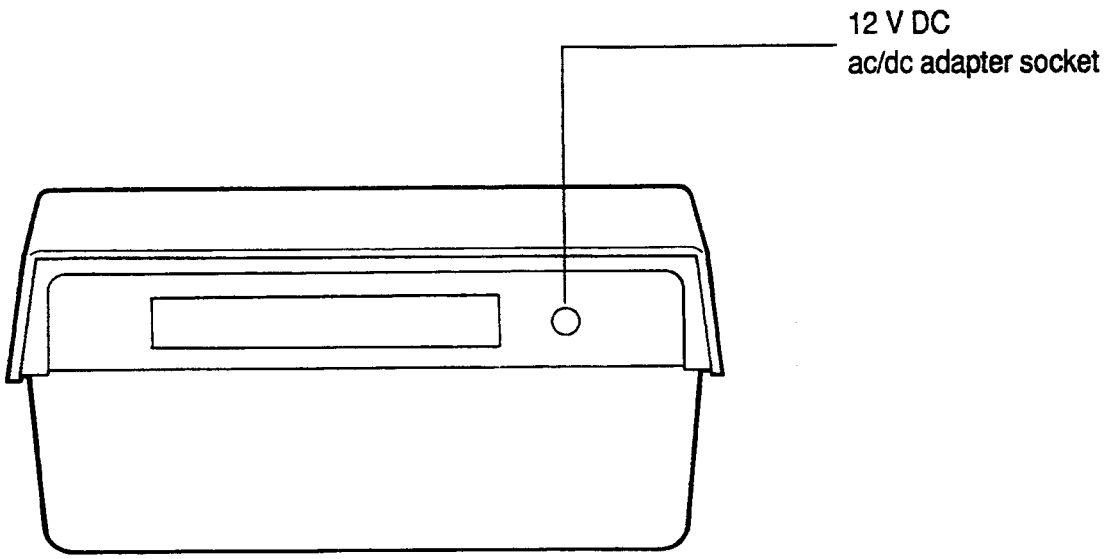

1.3 Principles of Operation

When light of a selected wavelength and intensity is introduced to a sample it can be absorbed, scattered or reflected, thereby reducing the light intensity leaving the sample. Ignoring losses due to scatter and reflection, the amount of light reduction due to absorption has been found to be directly proportional to pathlength of the sample and the concentration of the particular substance responsible for absorbing the light. The intensity of light is normally measured as ***transmittance*** or ***absorbance***, the change which occurs to the intensity of light is a quantitative measure of the absorbing substance, the *analyte.*

Defining the intensity of light generated at the source (a light bulb) as I, the light passes through a blank sample, not containing an analyte, and placed in a cuvette, having a defined pathlength (usually 1 cm.). The radiant intensity following the blank is I_0, which is reduced by a constant value related to window absorption and reflections. The ***transmittance***, T, can then be defined as the ratio of these intensities, namely:

$$T = \frac{I}{I_0}$$

Absorbance, A, is defined as a log to the base 10 of the reciprocal of ***transmittance*** that is:

$$A = \log_{10} \frac{1}{T} \text{ or } = -\log_{10} \frac{I}{I_0}$$

Although either ***transmittance or absorbance*** measurements can be made on our photometer, the latter is more often used since it normally is found to be a linear function to the concentration of the analyte.

1.3 Principles of Operation (continued)

The two most basic laws which describe the foundations of a quantitative analysis by photometry are attributed to Lambert and Beer. ***Lambert's Law*** states that the intensity of transmitted light decreases logarithmically as the path length increases arithmetically. ***Beer's Law*** states that increasing the concentration of analyte has the same effect as a proportional increase in the path length. Both laws use a constant related to the amount of light absorbed per analyte molecule, ie. specific absorption. (This property has been given many names in the literature, such as molar absorptivity and extinction coefficient. These names are simply trying to introduce the concept that different analyte molecules are able to absorb a different amount of light per molecule, which relates to the energy states of their electrons.)

The combined laws are now simply referred to as ***Beer's Law*** and is expressed as follows:

$$\log_{10} \frac{I}{I_0} = abC$$

where a is an absorptivity constant,
b is related to pathlength
and C is analyte concentration

or $-A = abC$

Since in most analytical work, the pathlength is kept constant using a 1 cm cell, the calibration graph generated for a particular analyte is linear with a measurement given in absorbance units over a wide range.

Once the linearity of a calibration curve has been established, an analyst has the convenient option of using a ***factor***, ***f*** and converting the reading into ***Concentration units***, ***C*** shown as follows:

$C = fA$ where the ***factor***, ***f***, combines the previous pathlength and absorptivity factors, a and b

Section 2
Operating Hints

2.1 Operating Hints

1. Some solution chemistries do not comply with Beer's law. When developing a new method check the linearity over a range of standard concentration.
2. To avoid errors, keep all plastic and glassware clean and free from scratches. Handle only by the rim to avoid fingermarks.
3. Take care to avoid air bubbles in the sample and spillage on the outside of the cuvette/test tube.
4. When using test tubes be sure to align the etched mark with the line on the cuvette holder.
5. Use the filter specified in the method, or select the filter that gives the maximum absorbance for a standard solution. Alternatively use the colour complement.

   Blue - Yellow
   Green/Blue - Orange
   Blue/Green - Red
   Green - Red or Blue

   e.g. for a blue sample use a yellow filter
   for a red sample use a blue/green filter.
6. Allow 15 minutes warm-up time before use.
7. Check blank and standard calibration at the beginning and end of each batch of samples.
8. For greatest accuracy, use samples and standards in the 0 to 0.70 Absorbance range. Dilute if necessary.

Section 3
Specification

3.1 Technical Specification

Operating Range

0 to 1.0	Abs
100 to 0	%T

Resolution

0.01	Abs (to 0.7)
1	%T

Warm Up Time

15 Mins.

Wavelength Range

400 - 710 nm

Power Requirements

90 to 127 or 198 to 264V or 12V DC lead acid battery.

Section 4
Operating Instructions

Controls/Displays

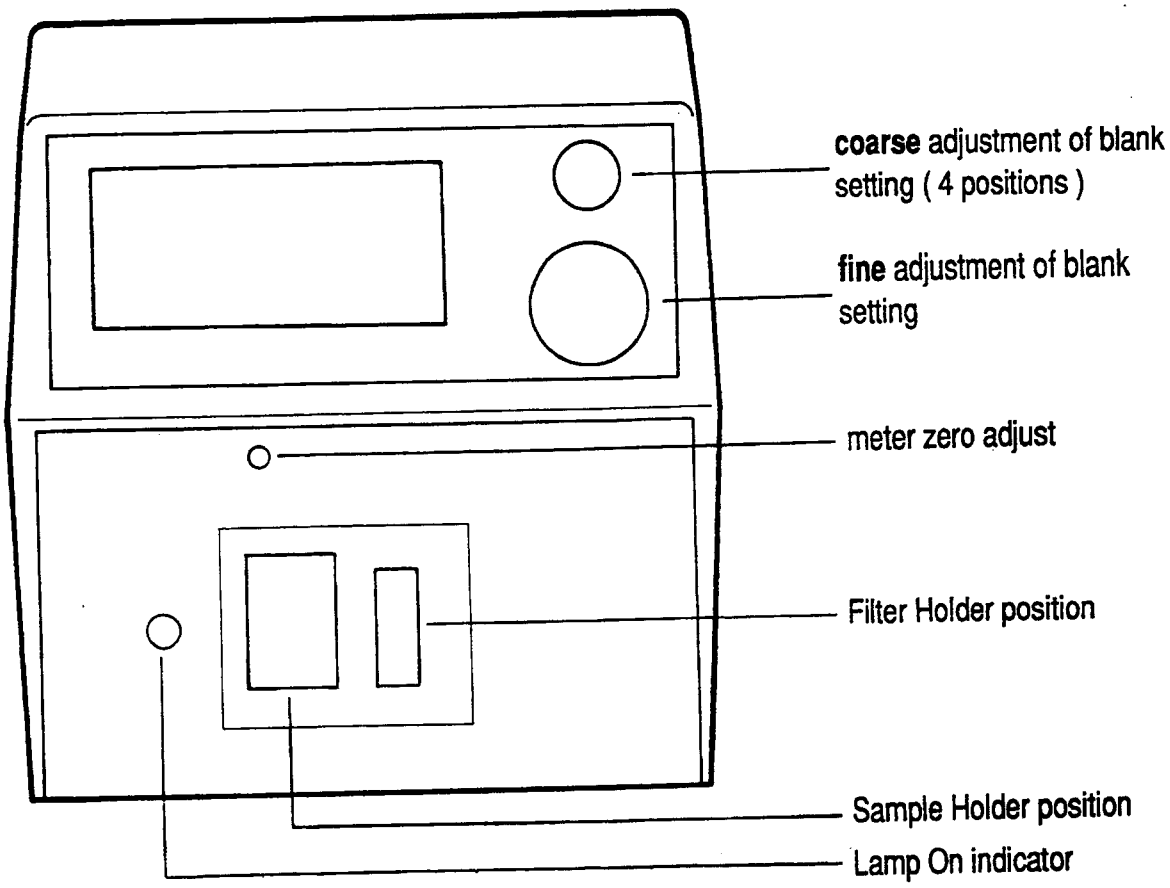

4.1 To Set Blank

1. Select and insert filter.
2. Insert sample holder.
3. Place the blank sample in sample holder.
4. Set display to 0 Absorbance (100 %T) using coarse and fine controls.

4.2 To Measure Absorbance

1. Set Blank.
2. Place the unknown sample in sample holder.
3. Note reading on Absorbance scale.
4. For each new sample, repeat 2 and 3.

4.3 To Measure %T

1. Set Blank.
2. Place the unknown sample in sample holder.
3. Note reading on %T scale.
4. For each new sample, repeat 2 and 3.

4.4 To Calculate Concentration

1. Set Blank.
2. Place standard solution of known concentration in sample holder.
3. Note reading on Absorbance scale.
4. Calculate the Concentration Factor (CF)

$$CF = \frac{\text{standard concentration}}{\text{Absorbance}}$$

5. Measure sample Absorbance and determine concentration by multiplying Absorbance reading by CF.

4.5 Calibration

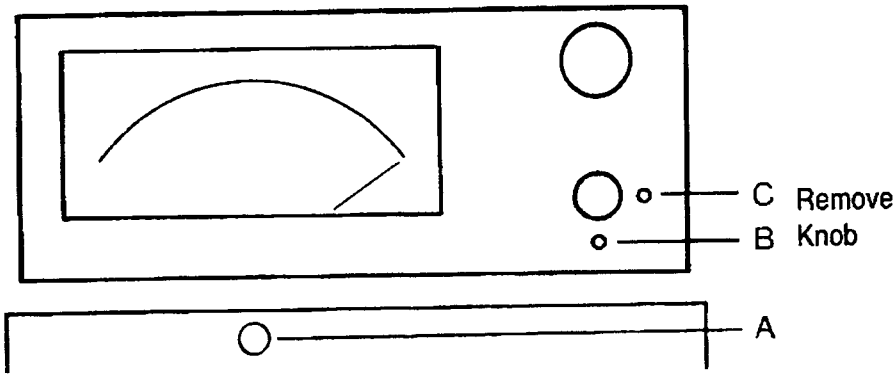

1. Disconnect power supply.
2. Align meter with 0 %T mark (remove plug at 'A' and use a small screwdriver).
3. Reconnect power supply.
4. Fit a filter and block the light through the sample well using a piece of thick card. Adjust 'B' for to align meter with 0 %T.

   Adjust 'C' only if it is not possible to set blank using the 410 or 710 filters.

Section 5
Problem Solving

5.1 Problem Solving

1. No meter deflection: Check power connection, check lamp.
2. Cannot set zero with blank sample:
   Check blank solution
   Check filter
   Check lamp.

5.2 Lamp Replacement

1. Remove the base. Do not strain the earth wire.
2. Slacken the lamp contact screw and remove lamp.
3. Fit the new lamp and tighten the contact screw.
4. Refit the base.

Section 6
Accessories

6.1 Optional Accessories

Cat. No.	Item	Qty
252 15 001	Standard filter 430 nm	
252 16 001	Standard filter 470 nm	
252 17 001	Standard filter 490 nm	
252 18 001	Standard filter 520 nm	
252 19 001	Standard filter 540 nm	
252 20 001	Standard filter 580 nm	
252 21 001	Standard filter 600 nm	
252 22 001	Standard filter 710 nm	
252 26 001	Set of 8 Standard filters	
252 31 001	Standard filter 410 nm	
471 89 000	Interference filter 510 nm	1
471 89 100	Interference filter 546 nm	1
471 89 150	Interference filter 600 nm	1
471 89 200	Interference filter 660 nm	1
471 89 300	Interference filter 680 nm	1
471 89 400	Interference filter 725 nm	1
471 88 300	Disposable plastic cuvettes (100)	1 pk
252 05 002	Glass cuvette 2.5 mm path length	1
252 05 001	Glass cuvette 5 mm path length	1
222 99 013	Glass cuvette 10 mm path length	1
002 99 013	12 matched test tubes - small	1 pk
002 99 012	12 matched test tubes - medium	1 pk
002 99 011	12 matched test tubes - large	1 pk
252 13 001	Pour in suck out cuvette and holder	1
252 10 001	Sample holder for small test tubes and 2.5 mm cuvette	1
252 11 001	Sample holder for medium test tubes and 5 mm cuvette	1
252 12 001	Sample holder for large test tubes and 10 mm cuvette	1
471 88 400	Flow cell	1
471 88 500	Water jacketed flow cell	1
258 00 604	Small volume cuvette	1
473 56 900	Printer (110V AC)	1
473 56 901	Printer (UK)	1
473 56 902	Printer (Euro)	
473 56 700	Printer consumable kit	1
471 88 200	Battery lead	1
471 88 100	Chart recorder	1

Sherwood Scientific Limited
Warranty Statement

Product Warranty

Serial Number _____

Warranty Term: 12 Months

Sherwood Scientific warrants, subject to the conditions itemized within this document, through either Sherwood Scientific personnel or personnel of its authorized distributors, to repair or replace free of all charges, including labour, any part of this product which fails within the warranty time specified above, appertaining to this particular product. Such failure must have occurred because of a defect in material or workmanship and not have occurred as a result of operation of the product other than in accordance with procedures described in the instructions furnished with this product.

Conditions and specific exceptions which apply to the above statement are as follows:

1. End-user warranty time commences on the date of the delivery of product to end-user premises.

2. 'Free of all charges' statement applies only in areas recognised by Sherwood as being services either directly by its own personnel, or indirectly through personnel of an authorized distributor. Products purchased outside these areas requiring service during the warranty period will incur charges relative to the travel/transit costs involved. However, products purchased in such areas will be serviced during the warranty period free of all charges providing they are returned, carriage paid, to either Sherwood or by pre-arrangement to an authorized Sherwood distributor.

3. All maintenance (other than operator maintenance as described in the instructions), repairs or modifications have been made by Sherwood or Sherwood authorized personnel.

4. This product has where applicable been operated using Sherwood specified supplies and reagents.

5. Sherwood reserves the right to make any changes in the design or construction of future products of this type at any time, without incurring any obligation to make any changes whatsoever to this particular product.

6. Reagents, supplies, consumables, accessories and user maintenance items are not included in this warranty.

7. Repairs or replacement of any part failing due to abnormal conditions including the following, are excluded from this warranty:
   a) Flood, lightning, earthquake, tornado, hurricane, or any other natural or man-made disaster.
   b) Fire, bombing, armed conflict, malicious mischief or sprinkler damage.
   c) Physical abuse, misuse, sabotage or electrical surge.
   d) Damage incurred in moving the product to another location.

8. User agrees to permit Sherwood personnel or personnel of its authorized distributor to make changes in the product which do not affect results obtained, but do improve product reliability.

Representations and warranties purporting to be on behalf of Sherwood Scientific made by any person, including distributors and representatives of Sherwood, which are inconsistent or in conflict with the terms of this warranty (including but not limited to the limitations of the liability of Sherwood as set forth above), shall not be binding upon Sherwood unless reduced to writing and approved by an officer of Sherwood Scientific.

Except for the obligations specifically set forth in this warranty statement, in no event shall Sherwood Scientific Limited be liable for any direct, indirect, special, incidental, or consequential damages, whether based on contract, tort or any other legal theory and whether advised of the possibility of such damages.

Neither Sherwood nor any of its third party suppliers makes any otherm warranty of any kind, whether expressed or implied, with respect to Sherwood Products.

Sherwood Scientific Ltd.,
1 The Paddocks,
Cherry Hinton Road,
Cambridge,
CB1 8DH,
England