Publication No. II 3053-3
July 1998
supersedes II3053-3
Feb. 1998
and II 3053-2
Sept. 1995

SUPPLEMENT to the INSTALLATION INSTRUCTIONS

for the

KODAK MULTILOADER 700

to include the

KODAK MULTILOADER 700 PLUS

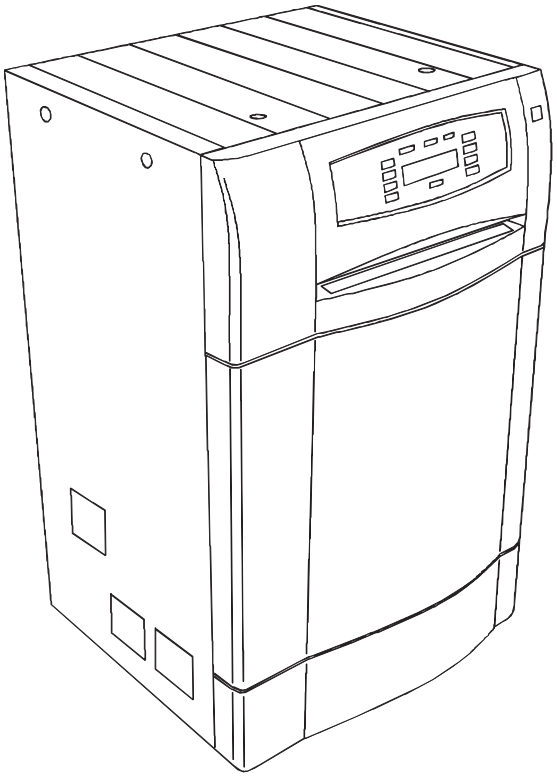

© KODAK AG STUTTGART, 1995, 1998

PLEASE NOTE

The information contained herein is based on the experience and knowledge relating to the subject matter gained by Kodak prior to publication.No patent license is granted by this information. Kodak reserves the right to change this information without notice, and makes no warranty, express or implied, with respect to this information. Kodak shall not be liable for any loss or damage, including consequential or special damages, resulting from the use of this information, even if loss or damage is caused by Kodak's negligence or other fault.

TABLE OF CONTENTS

MAINS PLUG AND EQUIPOTENTIAL EQUILIZATION DEVICE 1-1

ELECTRICAL SAFETY 1-1

JUMPER SETTING PCB A0 1-2

Up to SN 3372 (50 Hz) and SN 7273 (60 Hz) 1-2

From SN 3373 (50 Hz) and SN 7274 (60 Hz) 1-3

JUMPER SETTING PCB A9 Plus 1-4

HUMIDIFIER 1-7

INSTALLATIONS OUTSIDE US and CANADA 1-9

Note

This supplement contains only information describing the differences between the KODAK MULTILOADER 700 and the KODAK MULTILOADER 700 PLUS. Information common for both units is described in the INSTALLATION INSTRUCTIONS SP 3053.

MAINS PLUG AND EQUIPOTENTIAL EQUILIZATION DEVICE

Note

This information is for installations in Europe only!

According to European safety regulations for medical devices, the following conditions must be fulfilled: If the unit is operated within a distance of 1.5 m from the patient , the KODAK Multiloader 700 Plus must be properly connected to the mains with a CEE plug, **type 248 16-6h/220-240V~, 2P + Ground with VDE approval**. In that case it must also be connected to the equipotential equalization device (E^2D). E^2D with cable and the CEE plug must be provided by the customer. The purpose of the equipotential equalization device is to ensure that all medical devices are connected to the same ground potential.
If, on installation, the KODAK SERVICE PROVIDER connected the KODAK Multiloader 700 Plus to the equipotential busbar using the equipotential bonding plug, this connection may not be interrupted, i. e. the customer is not allowed to pull off the cable coming from the equipotential busbar (see illustration below).

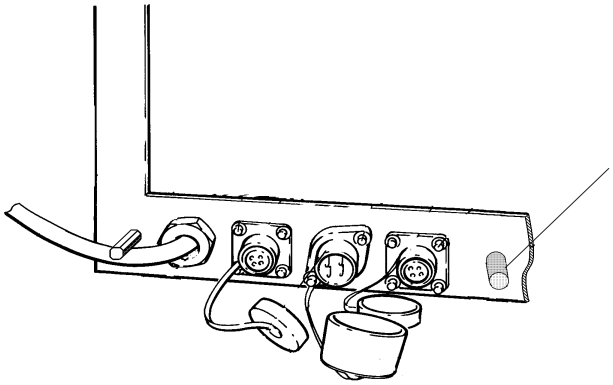

figure 1-1

ELECTRICAL SAFETY

After installation the ML700 Plus must be checked for electrical safety according to your local and national safety regulations.

JUMPER SETTING PCB A0

Up to SN 3372 (50 Hz) and SN 7273 (60 Hz)

For the ML700 Plus a single LANGUAGE EPROM is used. It contains all languages. This EPROM does not fit into the socket of U35 on PCB A0. Therefore a small ADAPTER is used in between the socket U35 and the new LANGUAGE EPROM. The JUMPER on this ADAPTER PCB has to be out. At ML700 with mod 24 the very same ADAPTER is used. However a smaller LANGUAGE EPROM is used too and a different JUMPER SETTING is needed.

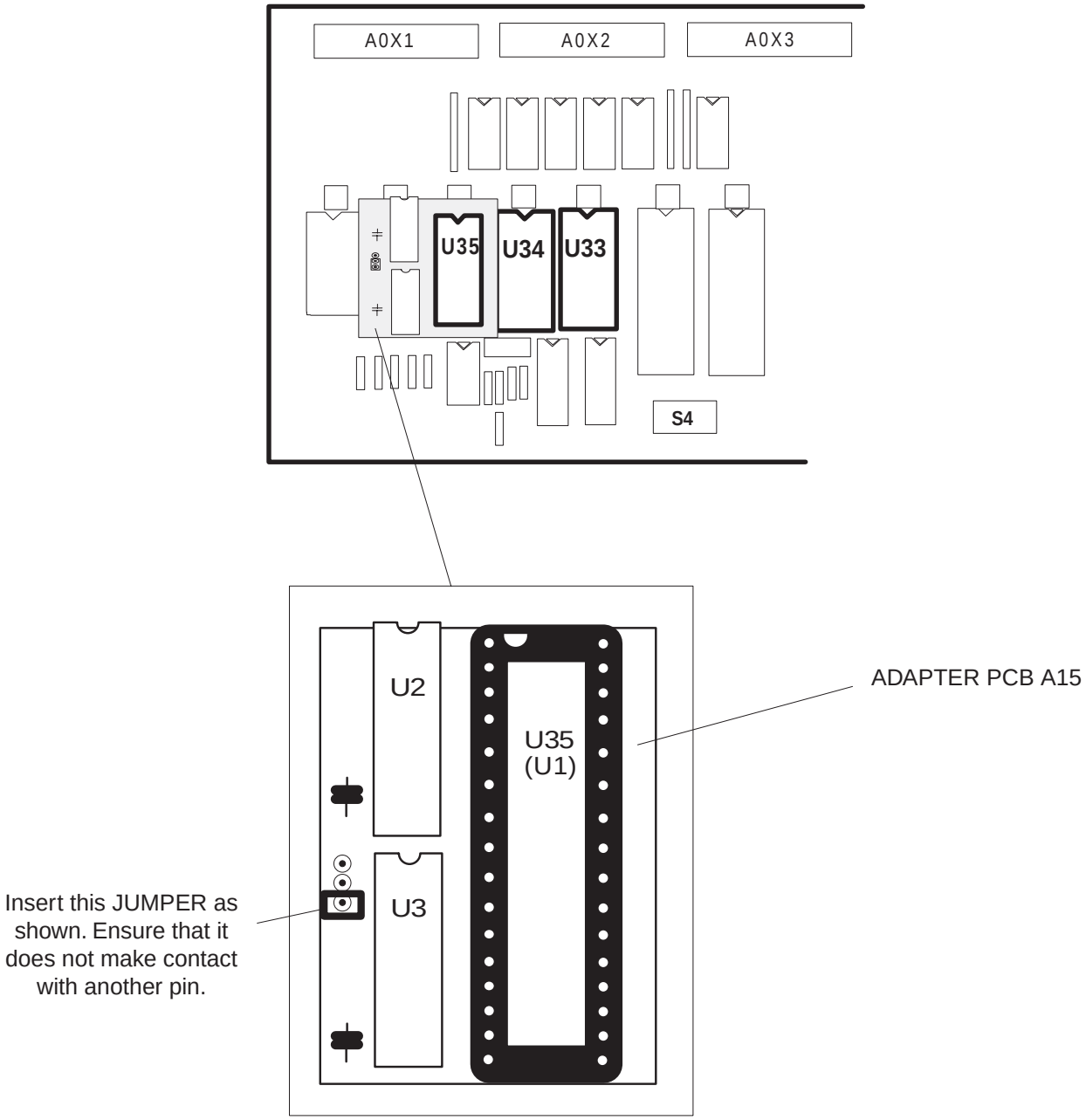

figure 1-2

From SN 3373 (50 Hz) and SN 7274 (60 Hz)

The ADAPTER PCB A15 is no longer used. The LANGUAGE EPROM U35 is inserted into the SOCKET U35 on PCB A0.

The JUMPER A0X11 must be set as shown in the figure below.

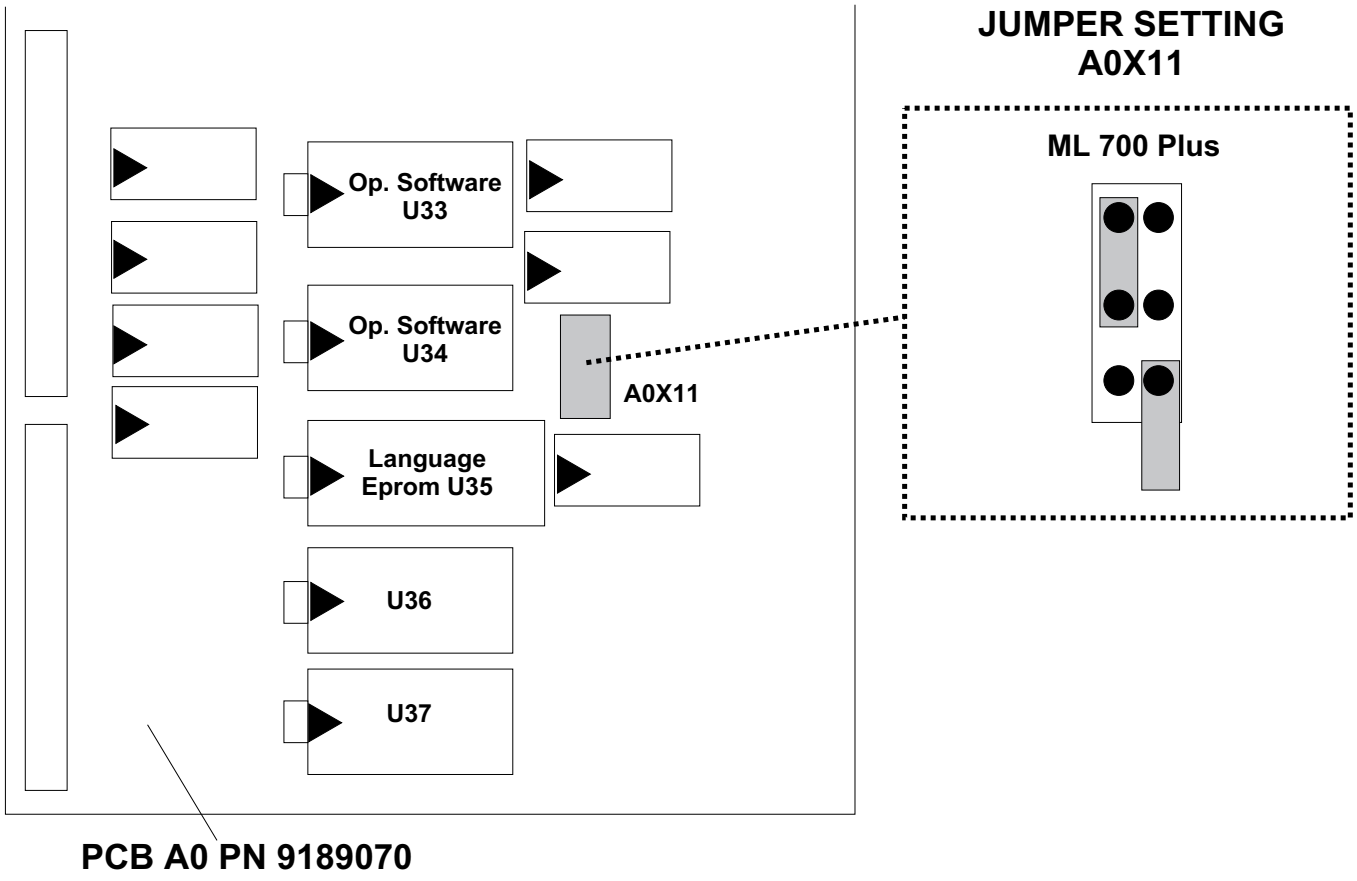

figure 1-3

JUMPER SETTING PCB A9 Plus

JUMPER SETTING A9X14

A9X14	PROCESSOR SPEED	PROCESSOR DELAY TIME
1-2	38.0 - 83 cm/min 15 - 32.6 in/min	25.4 sec
3-4	83.1-132.5 cm/min 32.7 - 52.1 in/min	6.2 sec
5-6	> 132.5 cm/min > 52.1 in/min	0.23 sec

JUMPER SETTING A9X15

SIDE-BY-SIDE	TUNNEL
A9X15 1-3	A9X15 3-5
A9X15 2-4	A9X15 4-6

Note

For details see figure 1-4 and 1-5.

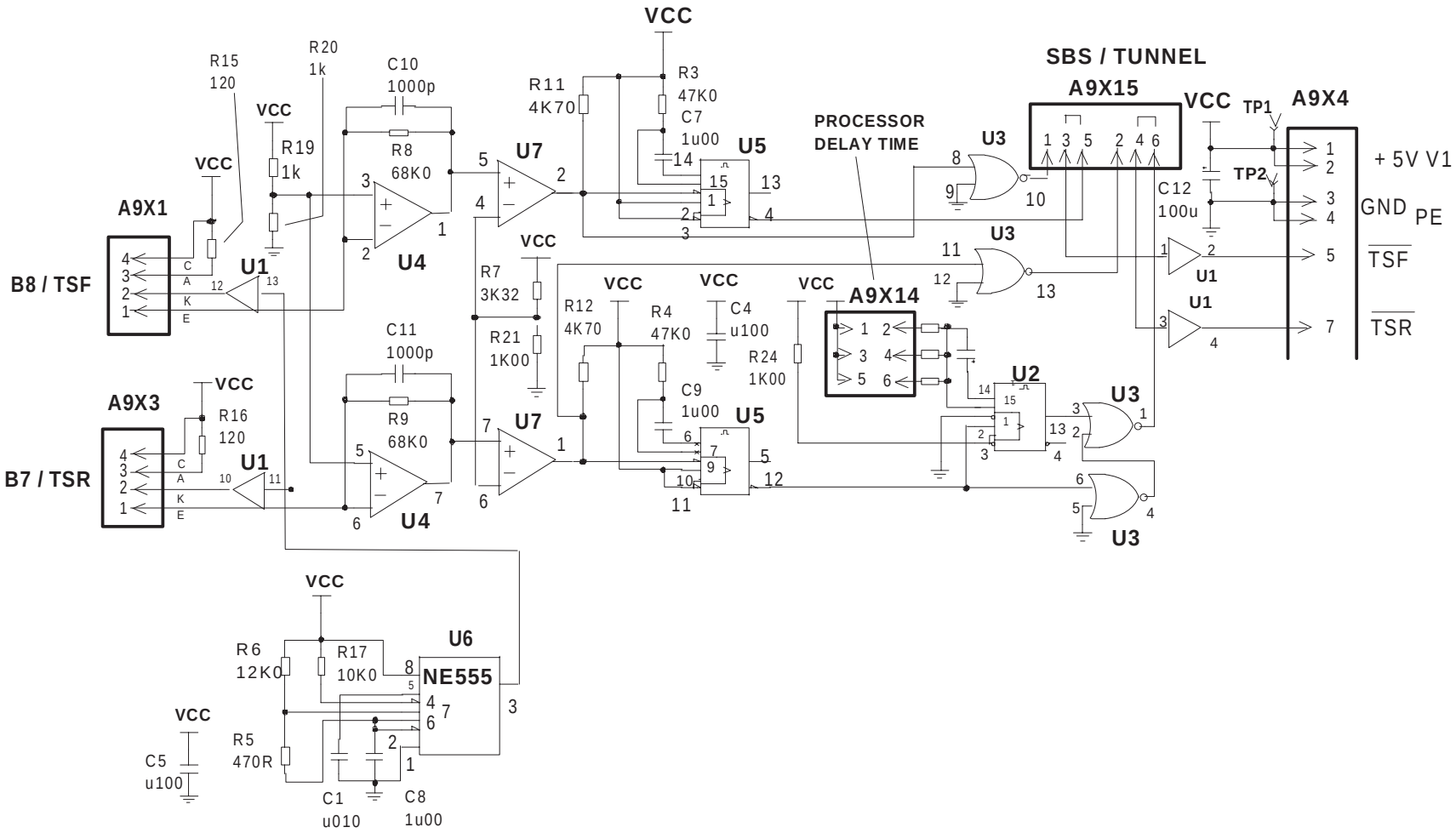
VCC
R3
47K0
C7
1u00
U5
R11
4K70
R15
120
R20
1k
C10
1000p
R8
68K0
R19
1k
U7
U4
A9X1
B8 / TSF
U1
R7
3K32
R21
1K00
R12
4K70
R4
47K0
C4
u100
R24
1K00
C9
1u00
A9X14
PROCESSOR
DELAY TIME
U3
SBS / TUNNEL
A9X15
TP1
TP2
A9X4
C12
100u
+ 5V V1
GND
PE
TSF
TSR
C11
1000p
R9
68K0
A9X3
B7 / TSR
R16
120
U2
U6
NE555
R6
12K0
R17
10K0
R5
470R
C5
u100
C1
u010
C8
1u00

figure 1-4

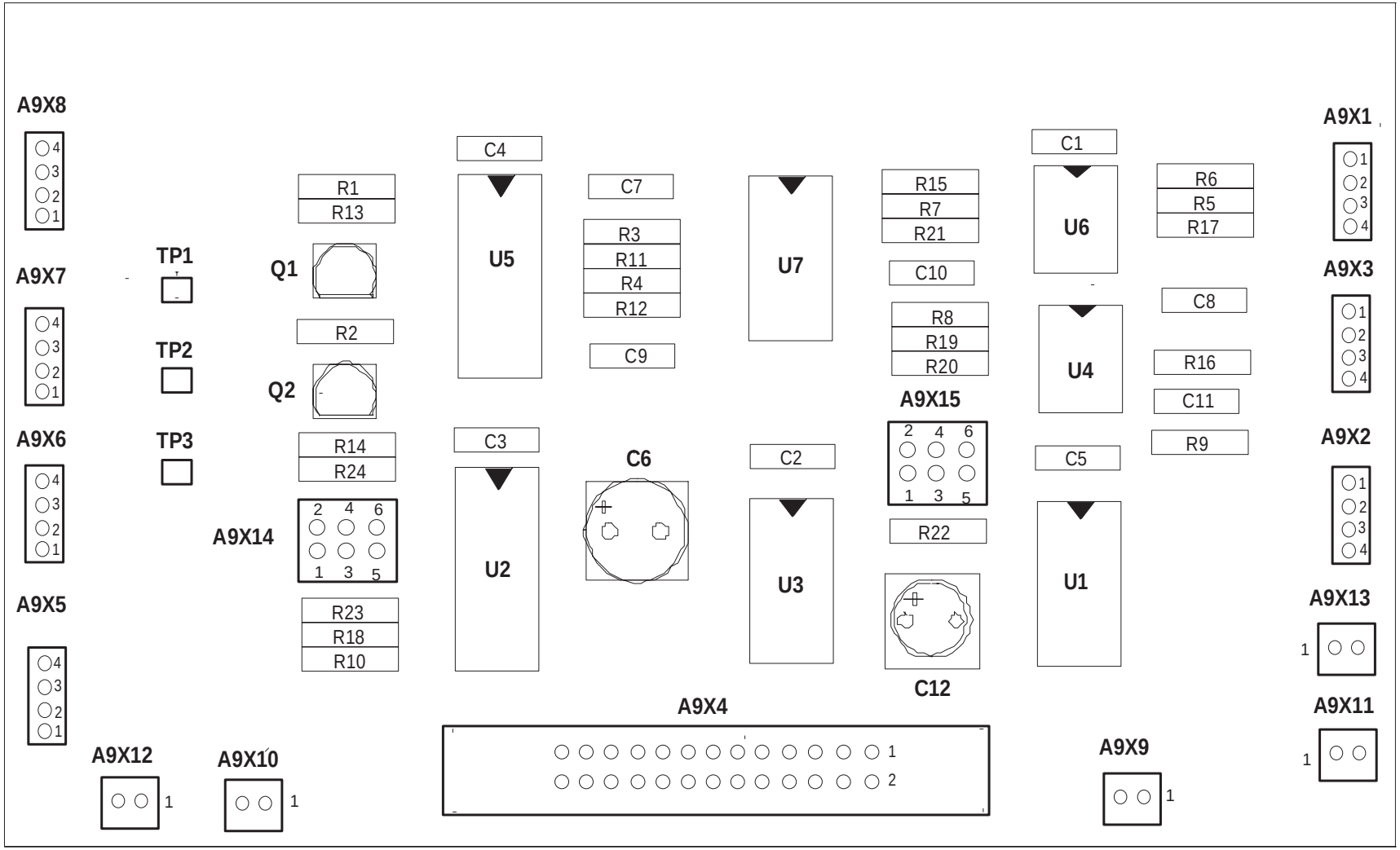
A9X8
A9X7
A9X6
A9X5
A9X12
A9X10
TP1
TP2
TP3
Q1
Q2
R1
R13
R2
R14
R24
A9X14
R23
R18
R10
C4
U5
C3
U2
C7
R3
R11
R4
R12
C9
C6
U7
C2
U3
R15
R7
R21
C10
R8
R19
R20
A9X15
R22
C12
A9X4
C1
U6
U4
C5
U1
R6
R5
R17
C8
R16
C11
R9
A9X9
A9X1
A9X3
A9X2
A9X13
A9X11

figure 1-5

HUMIDIFIER

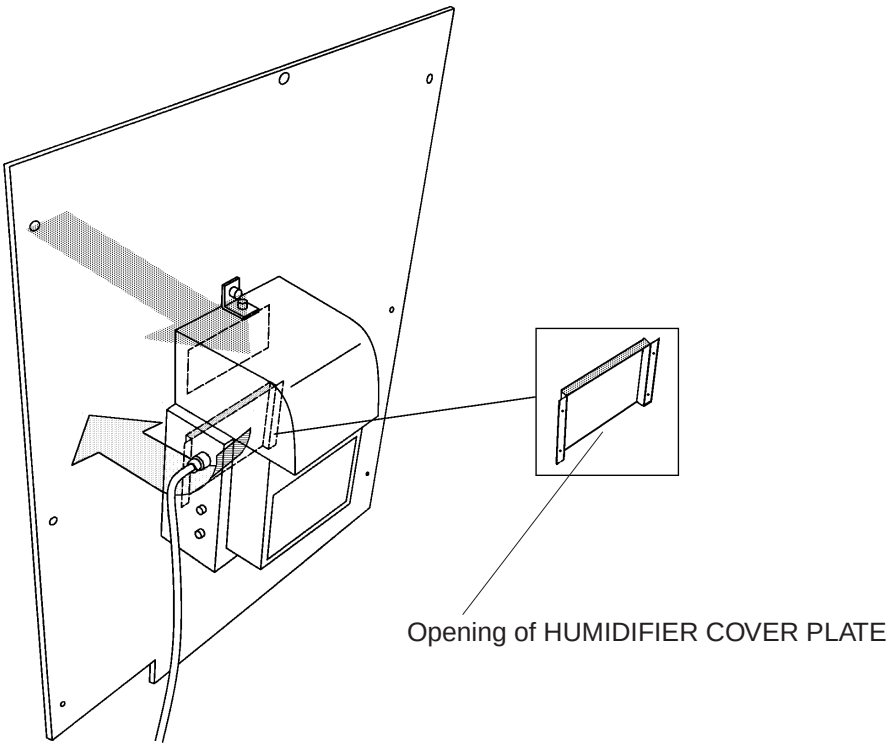

figure 1-6

1. Install the HUMIDIFIER COVER PLATE with the OPENING down. If this PLATE is installed with the OPENING up the efficiency of the humidifier will be decreased.

2. Adjust the voltage between TP2 (Gnd) and TP5 (plus) on PCB A16 to 4.0 volts (this is equal to 40% relative humidity).
For details see the WIRING DIAGRAM on the next page.

NOTE

In contrast to the ML700 the DOOR FAN of the ML700 Plus is not controlled by PCB A16. The DOOR FAN of the ML700 Plus is running as long as the ML700 Plus is switched on.

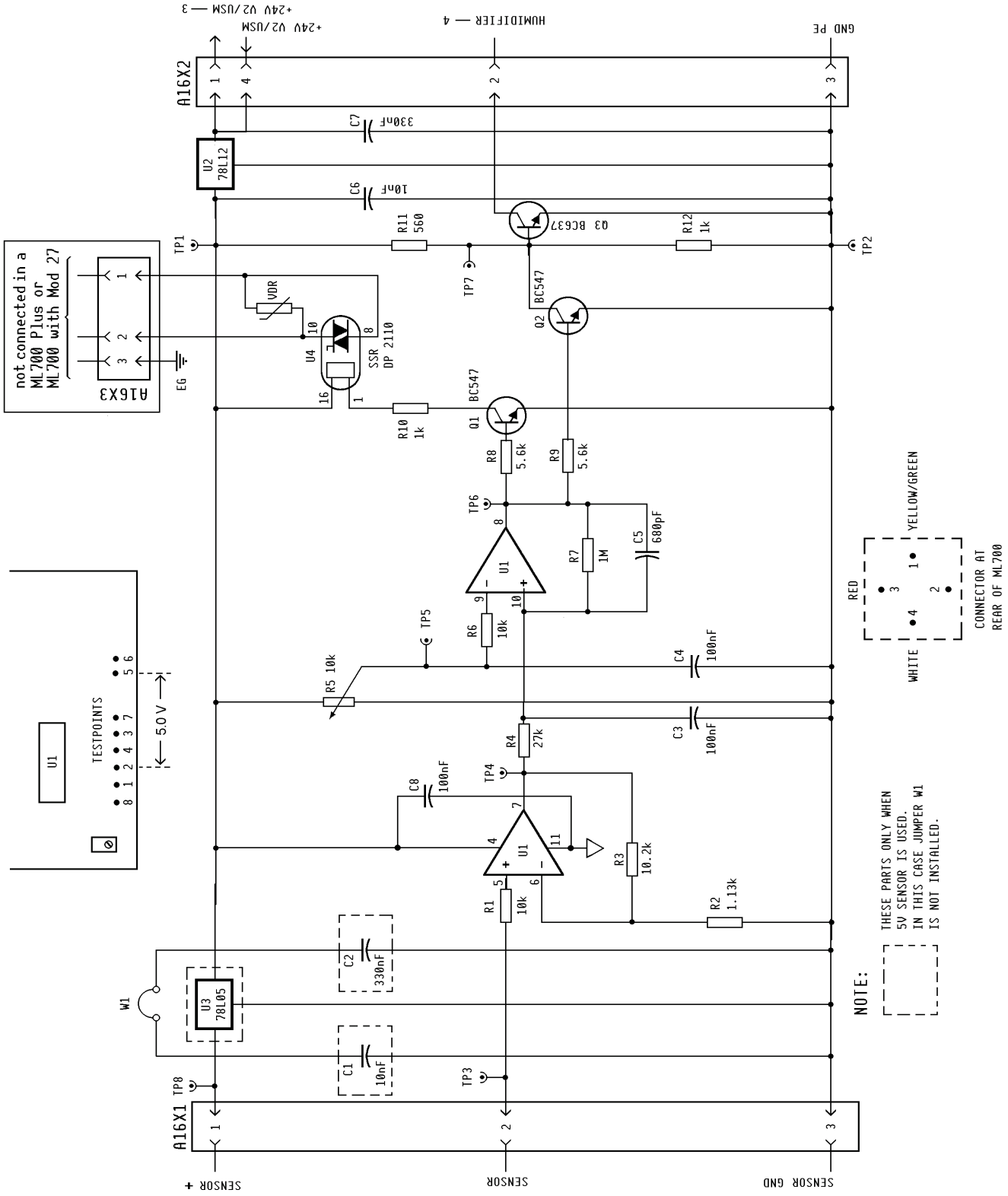
A16X2
+24V V2/USM — 3
+24V V2/USM
HUMIDIFIER — 4
GND PE
U2 78L12
C7 330nF
C6 10nF
R11 560
Q3 BC637
R12 1k
TP1
TP2
TP7
Q2 BC547
VDR
U4 SSR DP 2110
A16X3
not connected in a ML700 Plus or ML700 with Mod 27
EG
R10 1k
Q1 BC547
R8 5.6k
R9 5.6k
TP6
U1
R7 1M
C5 680pF
TP5
R6 10k
C4 100nF
R5 10k
C3 100nF
R4 27k
TP4
C8 100nF
R3 10.2k
R1 10k
R2 1.13k
U1
TESTPOINTS
5.0 V
C2 330nF
W1
U3 78L05
C1 10nF
TP8
TP3
A16X1
SENSOR +
SENSOR
SENSOR GND
YELLOW/GREEN
RED
WHITE
CONNECTOR AT REAR OF ML700
NOTE:
THESE PARTS ONLY WHEN 5V SENSOR IS USED. IN THIS CASE JUMPER W1 IS NOT INSTALLED.

figure 1-7

INSTALLATIONS OUTSIDE US and CANADA

Note

Due to safety regulations, the selected line voltage must be shown on the ML700 Plus DATA PLATE and in the OPERATING INSTRUCTIONS.

1. Take the selfadhesive LABEL with the selected line voltage and stick it into the indicated field on the DATA PLATE.

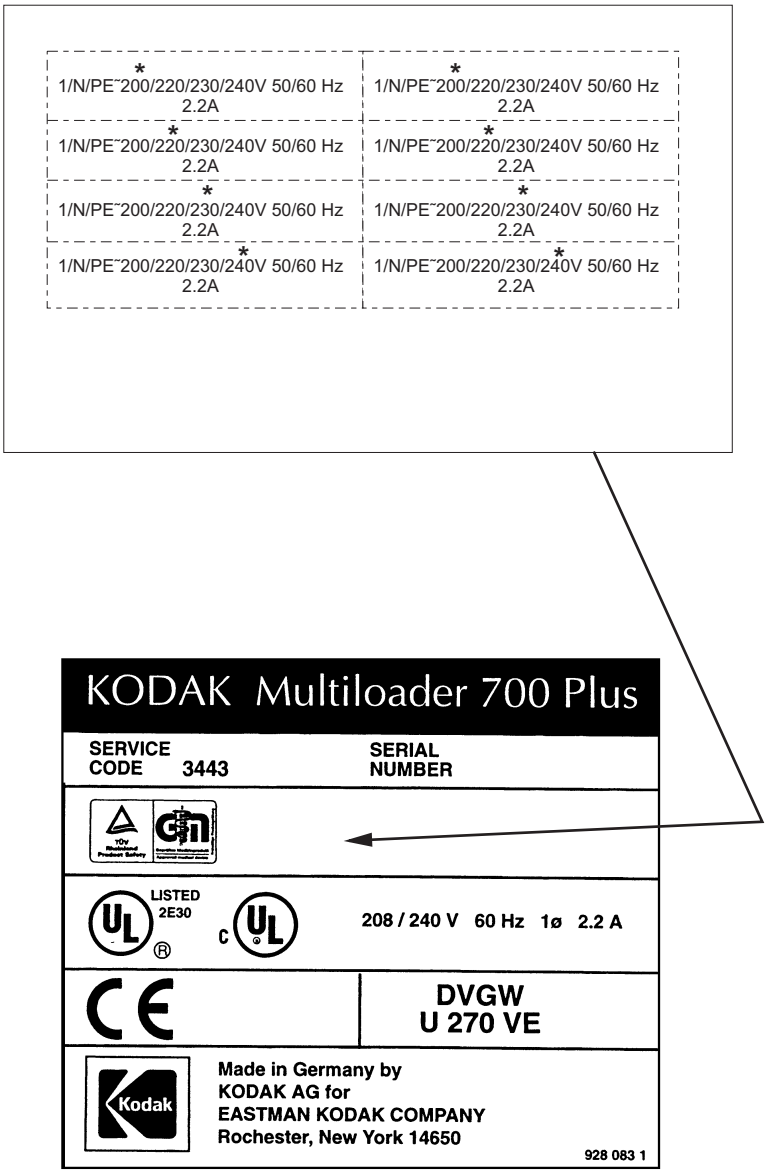

figure 1-8

2. Take the second LABEL with the selected line voltage and stick it into the provided space in section SPECIFICATIONS of the OPERATING INSTRUCTIONS.

Kodak AG
Hedelfinger Str. 54-60
70327 Stuttgart
Germany

Kodak, Min-R, X-Omat and X-Omatic are trademarks

CUSTOMER EQUIPMENT SERVICES KODAK AG STUTTGART