Publication No. 5B6341
January 1996
Supersedes October 1995

THEORY GUIDE
for the
Kodak X-Omat 5000 RA PROCESSOR

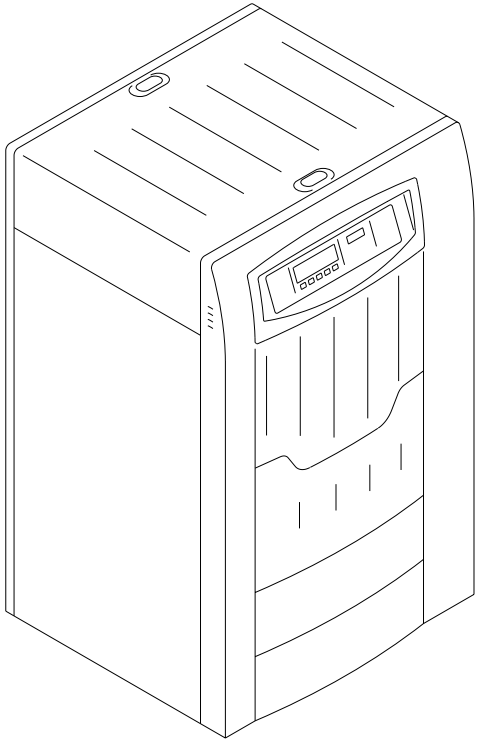

H148_0004GA

© Eastman Kodak Company

PLEASE NOTE The information contained herein is based on the experience and knowledge relating to the subject matter gained by Eastman Kodak Company prior to publication.

No patent license is granted by this information.

Eastman Kodak Company reserves the right to change this information without notice, and makes no warranty, express or implied, with respect to this information. Kodak shall not be liable for any loss or damage, including consequential or special damages, resulting from any use of this information, even if loss or damage is caused by Kodak's negligence or other fault.

Table of Contents

Description	Page
Introduction	3
Product Description	3
Operation	4
System Initialization	5
Film Transport	6
Overview	6
Film Detection	7
Drive System	8
Processing	11
Developer	11
Fixer	18
Wash	22
Dryer	24
Replenishment	27
Overview	27
Replenishment Modes	28
Filling the TANKS for the Developer and Fixer:	28
Control Circuit for Replenishment	29
Calibration	30
Standby Mode	31
Sleep Mode	32
THERMISTORS	33
DISPLAYS	34
DISPLAY PANEL	34
CONTROL PANEL	35
Power Distribution	36
AC Distribution	36
DC Distribution	36
Publication History	38

Section 1: Introduction

Product Description

The *Kodak X-Omat* 5000 RA Processor is a general purpose radiographic PROCESSOR and uses a conventional transport drive to accommodate both roll and sheet radiographic film.

The Processor provides 4 film cycles that operate at 4 default transport speeds:

- K/RA
- Rapid
- Standard
- Extended

All cycles, except for the K/RA cycle, use standard RP chemicals and film. The K/RA cycle requires the use of RA chemicals and film. Each of the 4 cycles has default parameters for

- transport speed
- developer and fixer replenishment volumes
- developer, fixer, and dryer temperatures

The default parameters are stored in memory and can be modified by the user. A battery in the CLOCK/MEMORY MODULE supplies uninterrupted power to memory. The parameters do not change when the operator de-energizes the PROCESSOR.

The 5000 RA includes several new features:

- A “Sleep Mode” that automatically energizes and de-energizes the PROCESSOR and includes the features “Roller Jog” and “Cool Down”
- Automatic logging of films by size
- Automatic logging of chemical solution usage
- Adjustments for the volume of the audio ALARM
- An Access code that the operator can select
- Internal diagnostic software that allows the service personnel to test components without a portable computer

Service personnel no longer replace EEPROMS when installing new operating software or when installing replacements for the 5000 MICROPROCESSOR BOARD or the 6000 FILM ACCUMULATOR BOARD. Using a portable computer, service personnel can quickly download software simultaneously to both the 5000 and 6000 BOARDS through the PROCESSOR INTERFACE CONNECTOR (PIC). The PIC is located on the INTERFACE CONTROL PANEL (J2001) and at the service RS232 CONNECTOR (J22) on the RECEIVING END of the PROCESSOR. If the 5000 BOARD must be replaced, service personnel will have to transfer the CLOCK/MEMORY MODULE from the existing 5000 BOARD to the replacement 5000 BOARD. The CLOCK/MEMORY MODULE contains all of the operating parameters for that specific site. When you transfer this MODULE, you eliminate the need to program the PROCESSOR again.

Important

Please review the following list to help you better understand this Theory Guide:

- The sections “Film Transport” and “Processing” describe the operating mode of the PROCESSOR. See Pages 31 and 32 for operation of the PROCESSOR during Standby Mode or Sleep Mode.
- For more detailed information regarding the block diagrams in this Theory Guide, see the Diagrams, Publication Part No. 5B6344.
- See the Component Locator, Publication Part No. 5B6343, to determine the location of parts referred to in this Theory Guide.
- This Theory Guide refers to error codes for certain malfunctions of the PROCESSOR. See the Diagnostics, Publication Part No. 5B6342, for more information on these errors.

Operation

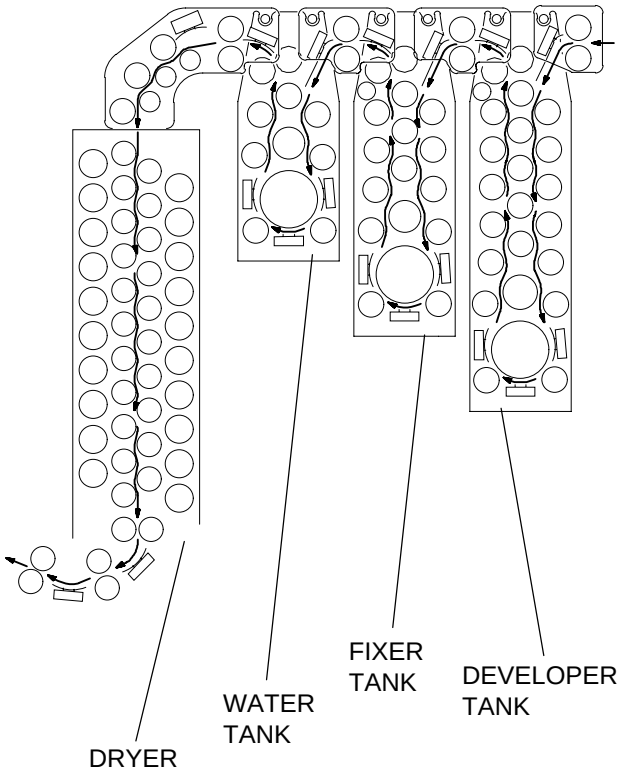

H108_0293CCA
H108_0293CA

The operator feeds film onto the feed tray of the PROCESSOR, actuating the film-transport. This network of motor-driven RACKS transports the film through 3 TANKS, each containing a different solution:

- The **developer** solution converts the invisible latent image on the film to a visible image.
- The **fixer** solution removes unused silver halide crystals from the film, stopping the continued development of the visible image. The fixer also increases the permanency of the visible image by hardening the emulsion. The RA fixer does not include a hardener because the RA film has a pre-hardened emulsion.
- The **water** removes excess developer and fixer from the film, preparing the film for drying and ensuring a permanent image on the film.

The rollers transport the film from the WASH RACK through the dryer in which a blower circulates warm air across the film. The dry, processed film then exits the PROCESSOR.

The following 6 CIRCUIT BOARDS monitor and control the PROCESSOR:

- 5000 microprocessor board
- 2000 INTERFACE board
- 3000 display board
- 6000 FILM ACCUMULATOR board
- 7000 DRIVE INTERLOCK BOARD
- 8000 CURRENT SENSE BOARD

To ensure optimum processing conditions while the film moves through PROCESSOR, the 5000 BOARD:

- maintains correct film-transport speed
- maintains the correct temperatures of the developer and fixer
- maintains correct replenishment rate of the developer and fixer
- maintains correct temperature in the dryeR

Section 2: System Initialization

When you either energize or reset the PROCESSOR, the software initializes certain components and checks the setup and operation of the PROCESSOR. Initialization is complete when the “Ready” indicator illuminates; see Page 34.

During initialization, the software:

- initializes Input/Output PORTS, the film accumulator, and the display paneL
- checks the operation of the RAM on the 5000 BOARD
- evaluates the checksum of the main program EEPROM
- evaluates the checksum of the bootstrap EPROM
- energizes the transport for 4 minutes, when the “Wait” indicator is illuminated, to feed any remaining film through the PROCESSOR
- opens the wash water solenoid for 4 minutes
- checks the developer and fixer solution levels
- activates the replenishment PUMPS to fill the TANKS for developer and fixer
- energizes the recirculation pump after the solutions reach operating levels
- maintains the temperature of the solutions at the operating setpoints
- energizes the dryer bloweR and the DRYER HEATER to attain setpoint temperature

After the initialization sequence completes successfully,

- The PROCESSOR displays a “Ready” message at the DISPLAY PANEL.
- The status LED DS18 on the 5000 MICROPROCESSOR BOARD provides a flash at 1/2-second intervals after the software initializes correctly.
- The PROCESSOR enters the “Standby Mode” if the FILM DETECTOR does not detect film.

Section 3: Film Transport

Overview

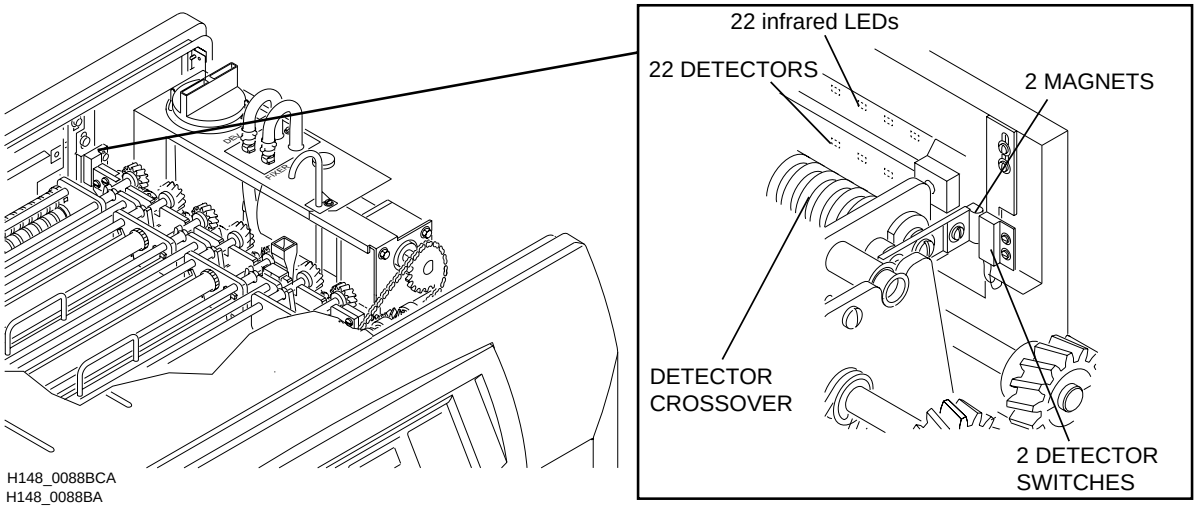

H148_0088BCA
H148_0088BA

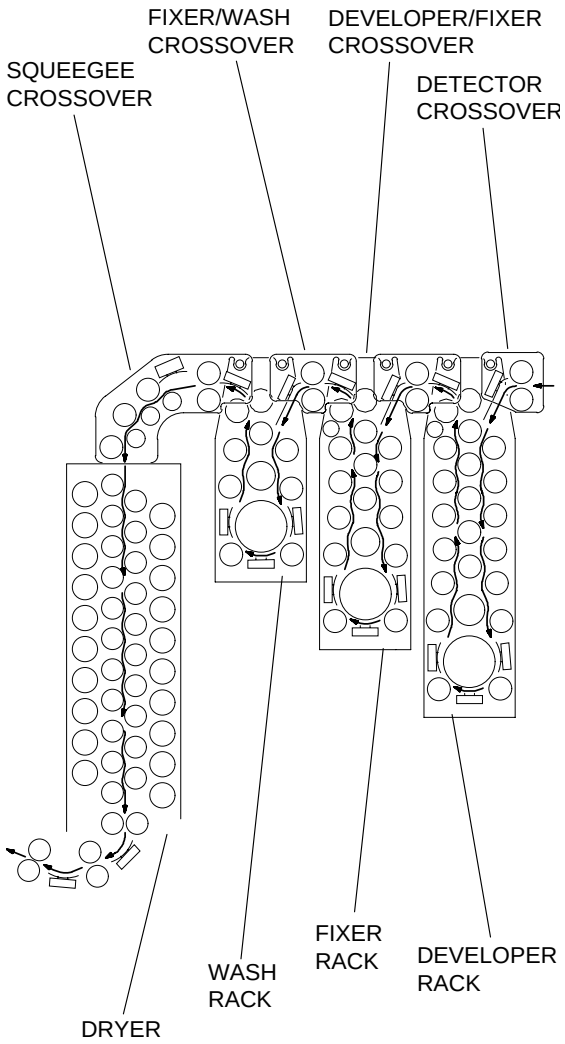

H108_0293CCB
H108_0293CA

When the operator feeds the exposed film into the PROCESSOR, the film accumulator detects the film. The status of the PROCESSOR then changes from the Standby Mode to the Operating Mode:

- The film transport operates.
- The dryer blower energizes; If the temperature is low, the DRYER HEATER energizes.
- The safelight receptacle de-energizes if the operator selected the Safelight Receptacle Mode.
- The wash water solenoid opens.

The transport drive moves the film through the developer rack, fixer rack, and wash rack. Each rack consists of a series of rollerS driven by CHAIN and GEAR. The 3 RACKS are similar in design but different in size.

Caution

To prevent contamination of chemicals, do **not** interchange the RACKS for the developer and fixer.

The crossover transports the film between RACKS. Pressure applied by the ROLLERS in these crossovers removes residual solution from film.

The SQUEEGEE CROSSOVER moves the film into the DRYER, spreading remaining drops of water across the film surface to provide fast, uniform drying. The ROLLERS in the DRYER then move the film out of the PROCESSOR.

Film Detection

6000 FILM ACCUMULATOR BOARD

Overview

1. The leading edge of the film separates the ROLLERS of the DETECTOR CROSSOVER.
2. The magnets on either end of these ROLLERS then actuate one or both of the FILM detector switches.
3. The film accumulator BOARD begins recording film area:

   The FILM ACCUMULATOR BOARD contains 22 LEDs that emit infrared light onto 22 DETECTORS. As film moves through the film accumulator, the film interrupts the infrared signal between some or all of these 22 pairs of LEDs and DETECTORS. Smaller film sizes will not interrupt the signals of all 22 pairs. The film accumulator BOARD determines film area as long as film interrupts the infrared signal between LEDs and DETECTORS and one of the FILM DETECTOR SWITCHES is actuated.
4. After detecting 1535 cm2 (238 in.2) of film, the FILM ACCUMULATOR BOARD sends a signal to the 5000 microprocessor board. The microprocessor uses this information to determine when to replenish the developer and fixer solutions.
5. When the trailing edge of the film has traveled 7.6 cm (3.0 in.) into the PROCESSOR, the audio ALARM on the film accumulator BOARD emits one sound to indicate that the operator can feed another sheet of film into the PROCESSOR.

Note

The Safelight/Accessory Receptacle on the feed end of the PROCESSOR provides power to SAFELIGHTS and accessories. The operator selects the required mode at the display panel. In the **Safelight Mode**, the PROCESSOR does not apply power to the receptacle when the FILM ACCUMULATOR BOARD detects film. After the ALARM emits one sound, indicating that the trailing edge of film has exited the FILM ACCUMULATOR, the MICROPROCESSOR applies power to the RECEPTACLE. In the **Accessory Mode**, the PROCESSOR applies power to the receptacle when the operator energizes the PROCESSOR.

Calibration

Caution

- Do not allow external light to illuminate the DETECTORS while the PROCESSOR energizes.
- Do not leave film in the FILM ACCUMULATOR.

When the operator energizes the PROCESSOR, the FILM ACCUMULATOR calibrates itself, automatically adjusting the power applied to the LEDs to compensate for performance changes caused by wear or environmental conditions.

Error Detection

The software continuously monitors all 22 pairs of LEDs and DETECTORS for correct operation and indicates the error message “Film Accumulator LED Error” at the DISPLAY PANEL when any 2 adjacent pairs **or** any 3 pairs malfunction. When this error occurs, the PROCESSOR automatically switches to a continuous Standby Mode and replenishes the solutions based on film length. While in this mode, the MICROPROCESSOR constantly operates the transport drive and calculates the length of processed film based on the length of time that the FILM DETECTOR SWITCHES are actuated.

The DISPLAY PANEL displays the error message “Loss of Film Accumulator Data Link” when a communication malfunction occurs between the 6000 board and the 5000 board. The audio ALARM emits 2 sounds if the PROCESSOR has an error condition when the film accumulator detects film.

Drive System

Control of the DC DRIVE MOTOR

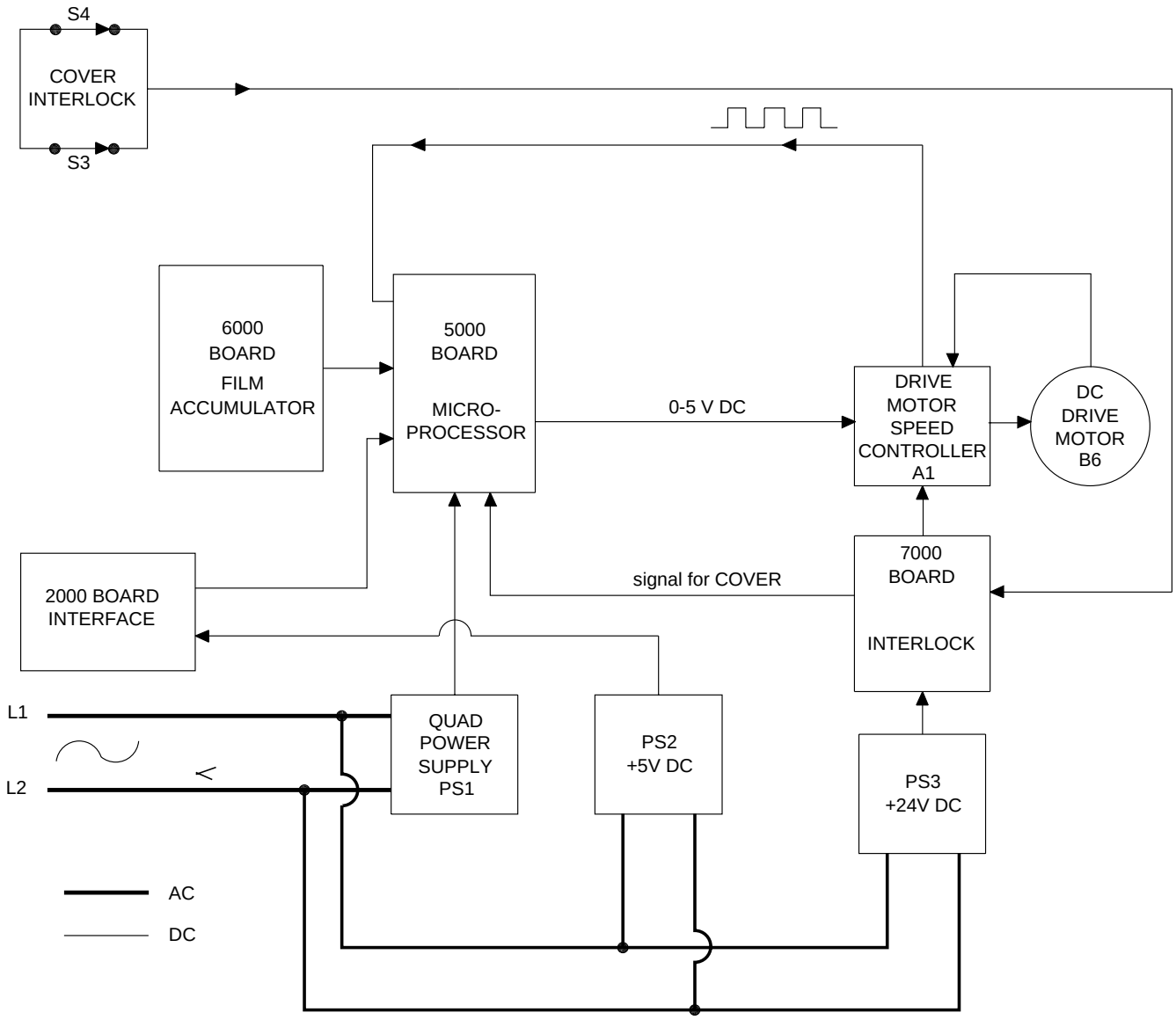

H148_9012DC

Typical* Control Voltages of the 4 Processing Cycles

Cycle	V DC
Extended	0.85
Standard	1.55
Rapid	2.25
K/RA	3.00

Note

*The control voltages can vary from one PROCESSOR to another PROCESSOR.

Actuating the Transport Drive

After receiving the feed signal from either the FILM ACCUMULATOR or the PROCESSOR interface connector (PIC), the microprocessor actuates the transport drive. The MICROPROCCESOR will not actuate the transport drive if any of the following conditions occur:

- If the cover is removed, the cover interlock switch indicates that the cover is removed, and the LCD displays the error “Top Cover Not Closed”.
- If the operator has selected either “Go To Setup” or “Select Cycle” from the main menu.
- If the operator has selected “Temperature Lockout” and the temperature of the developer is not within 0.3° C (0.5° F) of the setpoint temperature.

Speed Control

The POWER SUPPLY PS3 supplies +24 V DC to the drive motor controller. A brushless, variable-speed DC DRIVE MOTOR drives the film transport, which operates at a different speed for each of the 4 processing cycles. See the table at the bottom of the previous page. A DIGITAL to ANALOG (D/A) CONVERTER on the 5000 BOARD converts the digital value of the required speed to one of 4 analog values between 0 and 5 V DC. The table indicates the typical control voltages.

The 5000 board applies the required control voltage to the drive motor controller:

- The DC DRIVE MOTOR contains a pulse GENERATOR (not indicated in the diagram) that produces a feedback signal of 12 pulses per revolution. This feedback signal indicates the speed of the DC DRIVE MOTOR.
- The DRIVE MOTOR CONTROLLER receives the feedback signal and sends it to the MICROPROCESSOR.
- If necessary, the MICROPROCESSOR adjusts the speed of the DC DRIVE MOTOR by varying the analog voltage applied to the DRIVE MOTOR CONTROLLER.

Transport Errors

- **Inoperative Transport:** If the feedback indicates a pulse count less than a threshold value, the MICROPROCESSOR determines that the transport speed is zero. The DISPLAY PANEL displays the fatal error message “Inoperative Transport”.
- **Loss of Transport Speed Control:** If the speed of the transport drive assembly varies by 7.62 cm/minute (3 in./min) above or below the setpoint speed for 10 seconds, the DISPLAY PANEL displays the non-fatal error message “Loss of Transport Speed Control”.

Drive Components

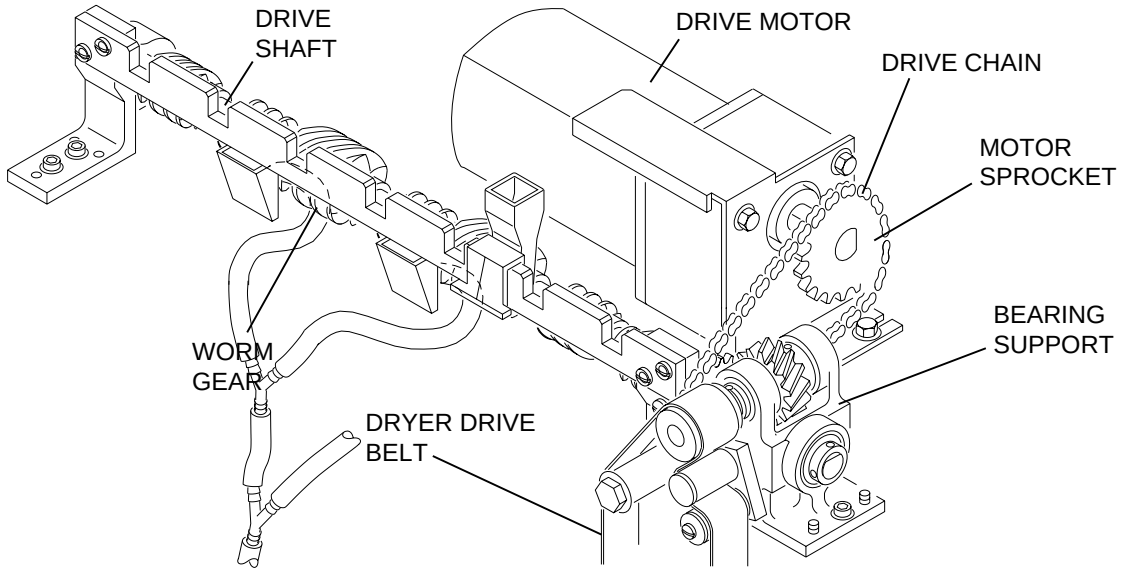

H148_0102BCB
H148_0102BA

The above diagram indicates components of the transport drive. When the drive motor energizes, the drive shaft and worm gears rotate, transferring drive to the drive gears, rotating the transport rollers of each racK to move the film through the PROCESSOR.

Section 4: Processing

Developer

Recirculation

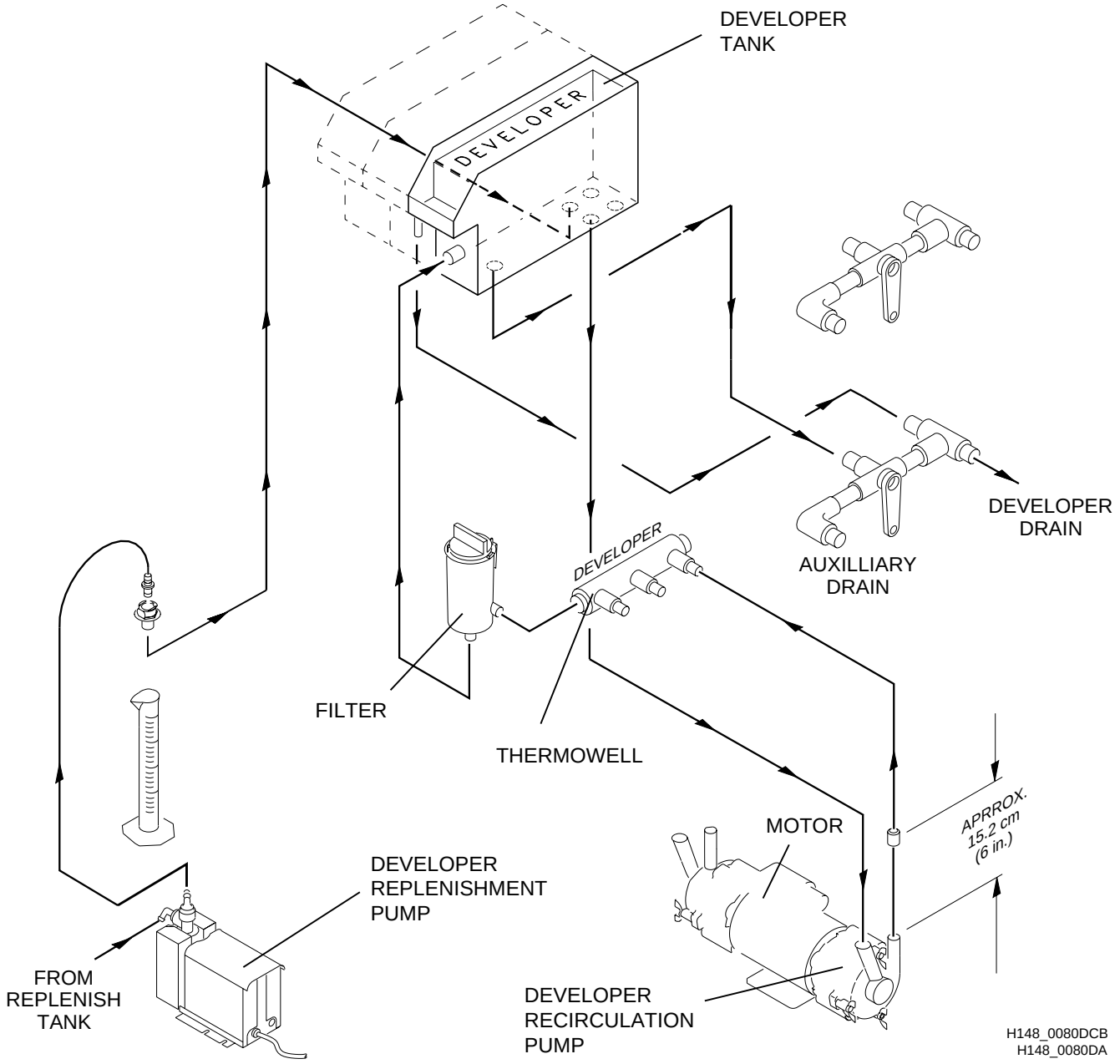

The transport drive moves the film into the developer tank, which contains 10.6 L (2.8 gal) of developer solution, a mixture of developer chemical and water. The developer solution converts the invisible latent image on the film to a visible image. An external tank of replenishment or an automixer automatically adds developer to the DEVELOPER TANK. For more information about replenishment, see Page 27.

Recirculation takes place only when the tanks for both the developer and fixer are full. A LEVEL PROBE in each tank monitors the level of solution.The PROCESSOR contains a DUAL-HEADED RECIRCULATION PUMP, consisting of a MOTOR that is magnetically coupled to the DEVELOPER RECIRCULATION PUMP and the FIXER RECIRCULATION PUMP. The MOTOR drives both PUMPS. The developer recirculation pump circulates the developer solution continuously through the thermowell, the filter, and the DEVELOPER TANK.

Control Circuit for Recirculation of Developer and Fixer

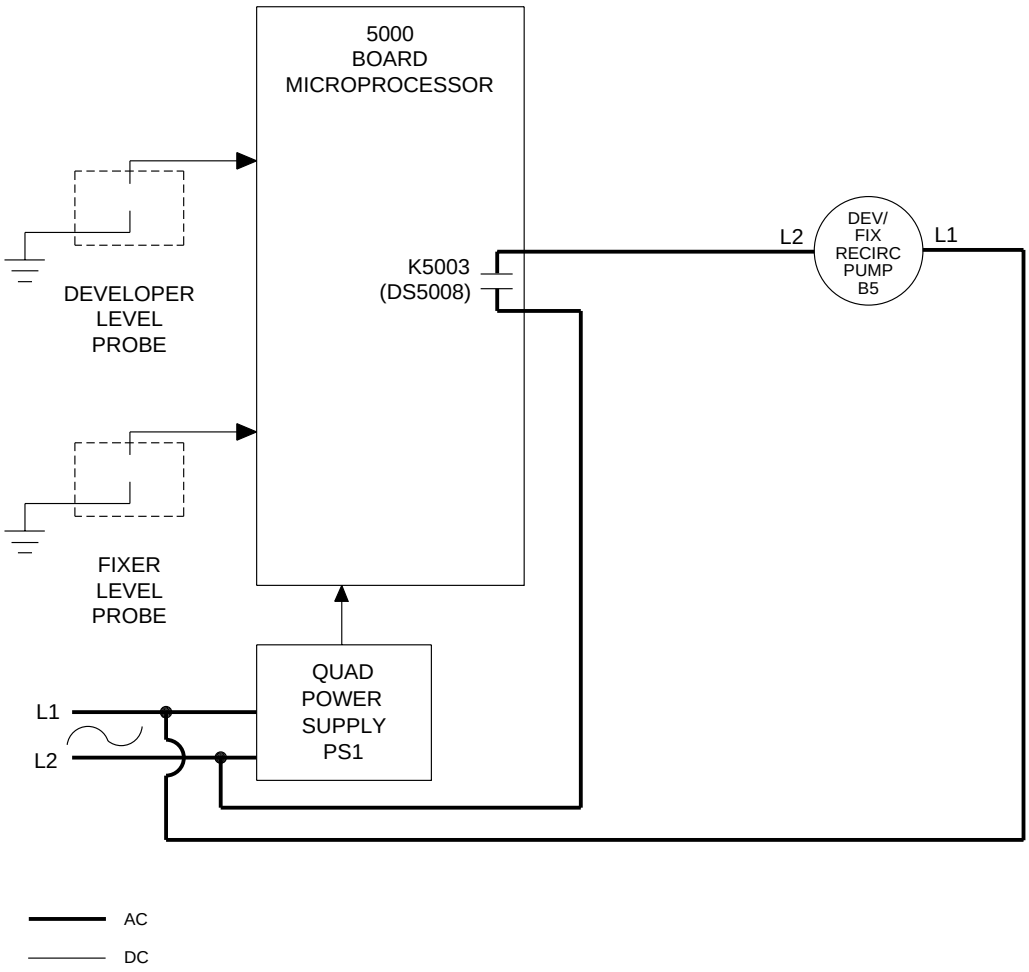

H148_9006DC

The control circuits for recirculation of the developer and the fixer are the same. A LEVEL SENSOR assembly contains a pair of LEVEL PROBES, one for the DEVELOPER TANK and one for the FIXER TANK. A correct level of solution in both TANKS immerses the 2 LEVEL PROBES, providing a path to ground. The microprocessor monitors the resistance of this path:

- If either level PROBE is not immersed in solution for 10 consecutive readings, approximately 5 seconds, the MICROPROCESSOR detects a high resistance and determines that the level is low.
- If both level PROBES are immersed in solution, the MICROPROCESSOR detects a low resistance and determines that the solutions are at the correct operating levels.

When the MICROPROCESSOR detects that **both** solution levels are correct, it closes the contacts of the electromechanical relay K5003, energizing the recirculation pump. The LED DS5008 illuminates. If the solution does not reach the correct level within 4 minutes, the MICROPROCESSOR indicates a “Tank-fill error” at the DISPLAY PANEL.

Developer Temperature

Overview

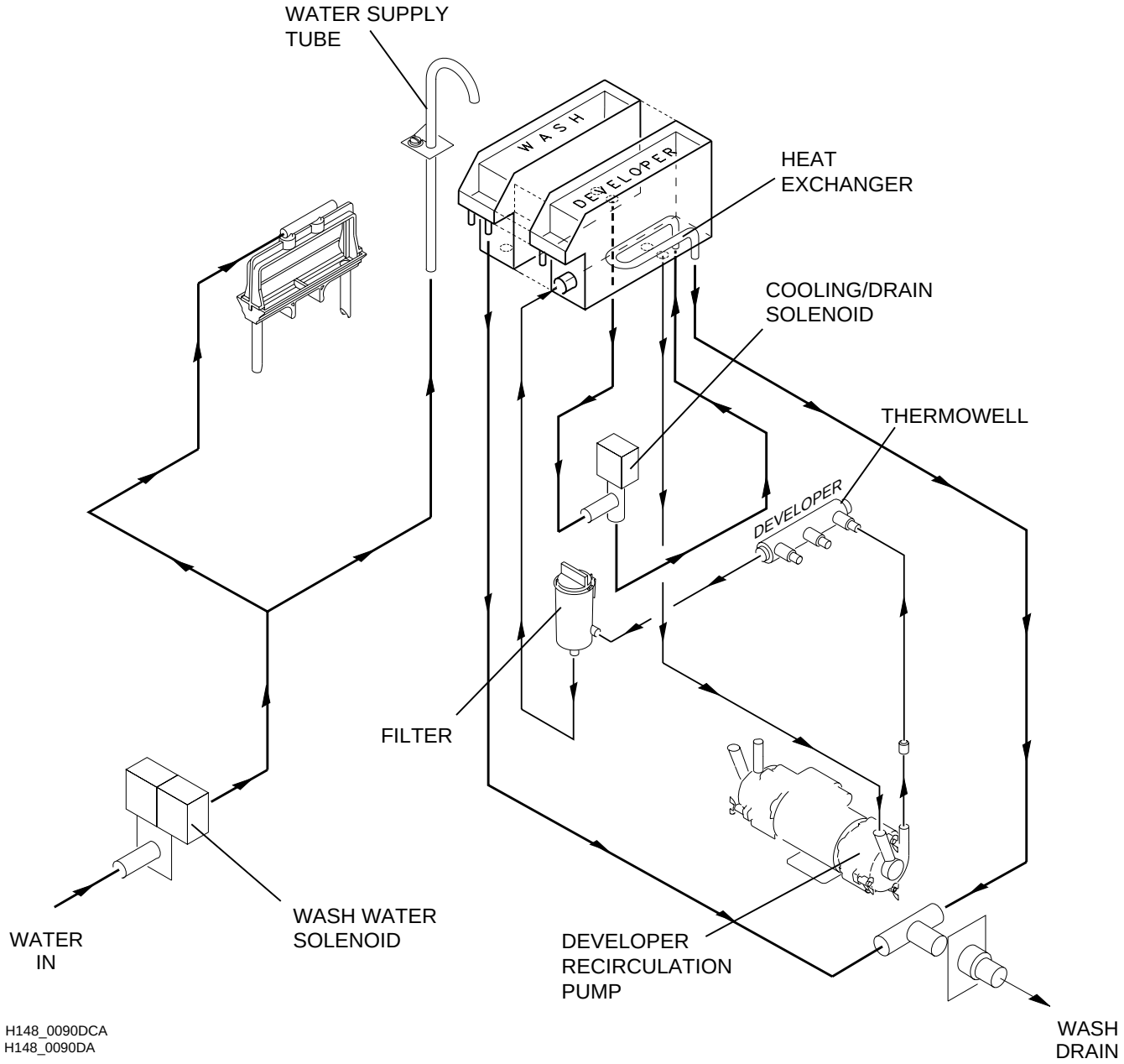

H148_0090DCA
H148_0090DA

Developer Heating

The MICROPROCESSOR maintains the temperature of the developer at the setpoint plus or minus 0.3°C (0.5°F) for optimum processing of the film. The setpoint temperature depends on the cycle. The microprocessor continuously monitors the resistance of the thermistor in the thermowell. This resistance changes inversely with the temperature of the developer. For more information about the thermistor, see Page 33.

The thermowell contains a heater that energizes at different duty cycles to maintain the temperature. The microprocessor uses an algorithm to control the duty cycle:

X=Setpoint temperature in °F minus solution temperature in °F	Duty Cycle of the Developer HEATER
$X \geq 0.5$	100%
$0.3 \leq X < 0.5$	60%
$0.1 \leq X < 0.3$	40%
$0 < X < 0.1$	20%
$X \leq 0$	0%

Therefore, the HEATER

- operates continuously when the solution temperature is at least 0.3°C (0.5°F) below the setpoint temperature
- operates on a duty cycle of 60% when the solution temperature is between at least 0.17°C (0.3°F) and 0.3°C (0.5°F) below the setpoint temperature
- operates on a duty cycle of 40% when the solution temperature is between at least 0.06°C (0.1°F) and 0.17°C (0.3°F) below the setpoint temperature
- operates on a duty cycle of 20% when the solution temperature is between the setpoint temperature and 0.06°C (0.1°F) below the setpoint temperature
- de-energizes when the solution temperature is greater than or equal to the setpoint temperature

Developer Cooling

1. The cooling/dRain solenoid opens when the temperature of the developer exceeds the setpoint temperature by 0.17°C (0.3°F) for 5 seconds.
2. Water from the wash tank flows at 0.5 gallons per minute into a heat exchanger, cooling the developer.
3. The water exiting the heat exchanger flows to the DRAIN. At the same time, the WASH water solenoid supplies water at a rate of 1.0 gallon per minute to the wash tank to keep it full during the cooling operation.
4. The cooling cycle continues until the developer temperature is sufficiently cooled.
5. The cooling/ dRAIN solenoid energizes (closes), preventing water flow to the heat exchanger.

Developer Temperature Display

The MICROPROCESSOR calculates the developer temperature by averaging 10 consecutive readings and updates the value displayed at the LED on the display panel approximately every 10 seconds.

Control Circuit for Developer Temperature

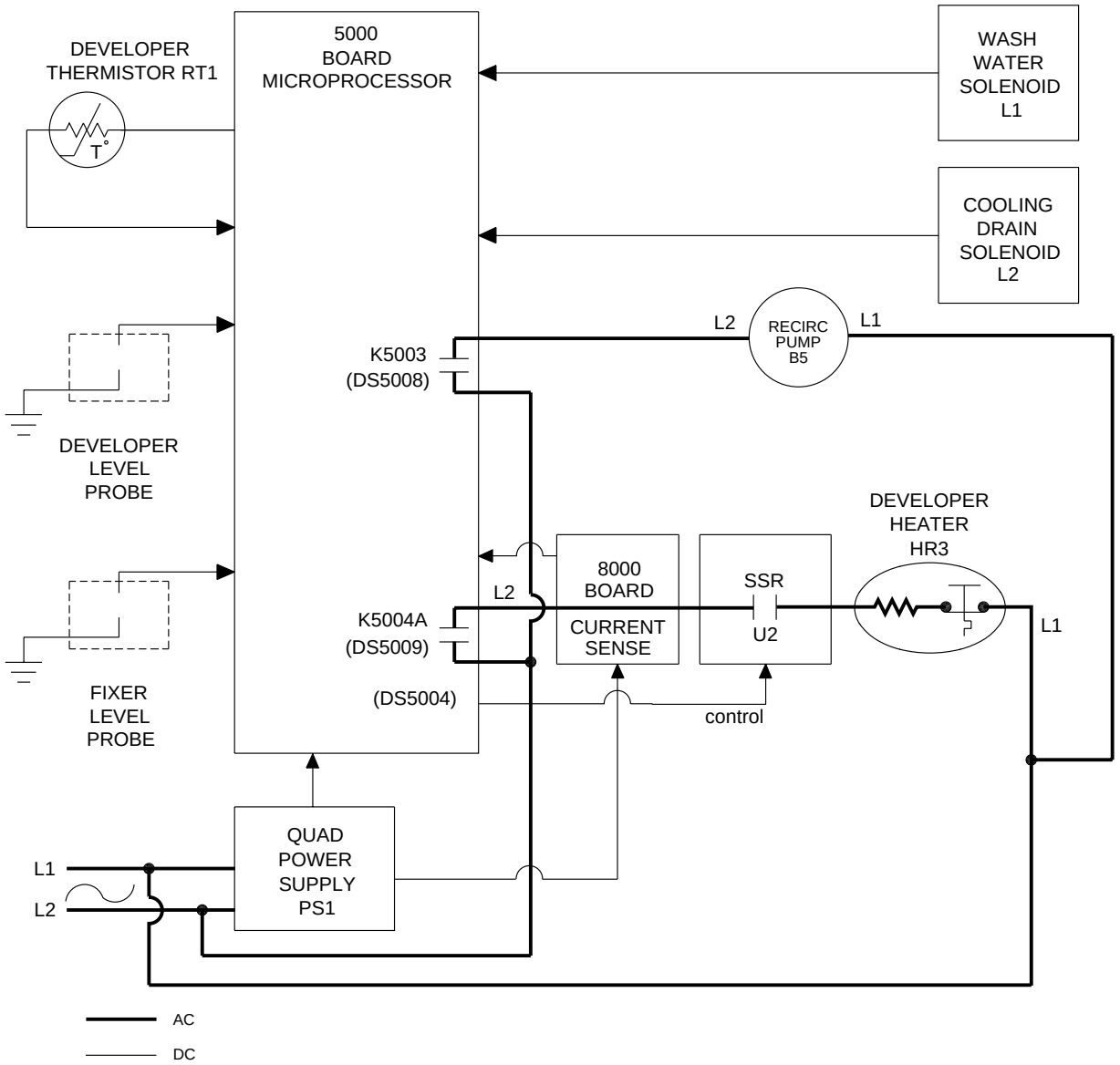

H148_9011DC

1. Correct levels of solution in each of the TANKS for developer and fixer immerse the LEVEL PROBES, providing separate paths to ground.
2. The MICROPROCESSOR detects the decreased resistance of the immersed LEVEL PROBES and actuates the RELAYS K5003, K5004A and K5004B.
3. The RELAY K5004A enables the DEVELOPER HEATER HR3. The LED DS5009 illuminates when the RELAY K5004A enables HR3.
4. The RELAY K5003 energizes the recirculation pump B5. The LED DS5008 illuminates when the RELAY K5003 energizes B5.
5. The control signal from the 5000 BOARD energizes the SOLID STATE RELAY SSR-U2, which energizes the DEVELOPER HEATER HR3. This HEATER operates as necessary to maintain the setpoint temperature of the developer solution. The LED DS5004 illuminates when the 5000 BOARD energizes SSR-U2.
6. An ANALOG to DIGITAL (A/D) CONVERTER on the 5000 BOARD converts the analog resistance of the THERMISTOR to digital data.

7. The MICROPROCESSOR applies an algorithm that converts the digital data to temperature. Every one second, the MICROPROCESSOR compares this temperature to a setpoint temperature and determines if the solution requires either heating or cooling.
8. If the temperature of the developer solution is
   - below the setpoint, the microprocessor applies DC voltage at the correct duty cycle to control the RELAY SSR-U2, energizing the developer heater at the correct duty cycle. The duty cycle depends on the difference between the temperature of the developer solution and the setpoint temperature.
   - above the setpoint, the microprocessor de-energizes the developer heater and opens the WASH WATER solenoid (if it is not already open) and the cooling/DRAIN solenoid. The cooling/DRAIN solenoid allows water to flow through the heat exchanger, cooling the developer.
9. When either the DEVELOPER HEATER or the FIXER HEATER operates, the 8000 BOARD detects current from the corresponding HEATER and sends a signal to the 5000 BOARD.

Developer Temperature Control Errors

- **DEVELOPER THERMISTOR:** If the thermistor **either** opens or shorts, the DISPLAY PANEL displays the error message “Developer Thermistor Failure”. For more information, see Page 33.
- **A/D CONVERTER:** If the A/D converter malfunctions, the DISPLAY PANEL displays the error message “A/D Converter Failure”.
- **DEVELOPER HEATER:** If the MICROPROCESSOR does not receive the signal from the 8000 BOARD indicating that the DEVELOPER HEATER is operating, the DISPLAY PANEL displays the error message “Developer Heater Failure”.
- **Developer Cooling Ability:** The MICROPROCESSOR checks that the temperature of the developer decreases at a minimum cooling rate of 0.05°C (0.1°F) every 3 minutes. If the developer temperature does not decrease at the correct rate, the DISPLAY PANEL displays the error message “Loss of Developer Cooling Ability”. This error will clear when either the rate corrects itself or the solution temperature reaches the setpoint temperature.

Fixer

Recirculation

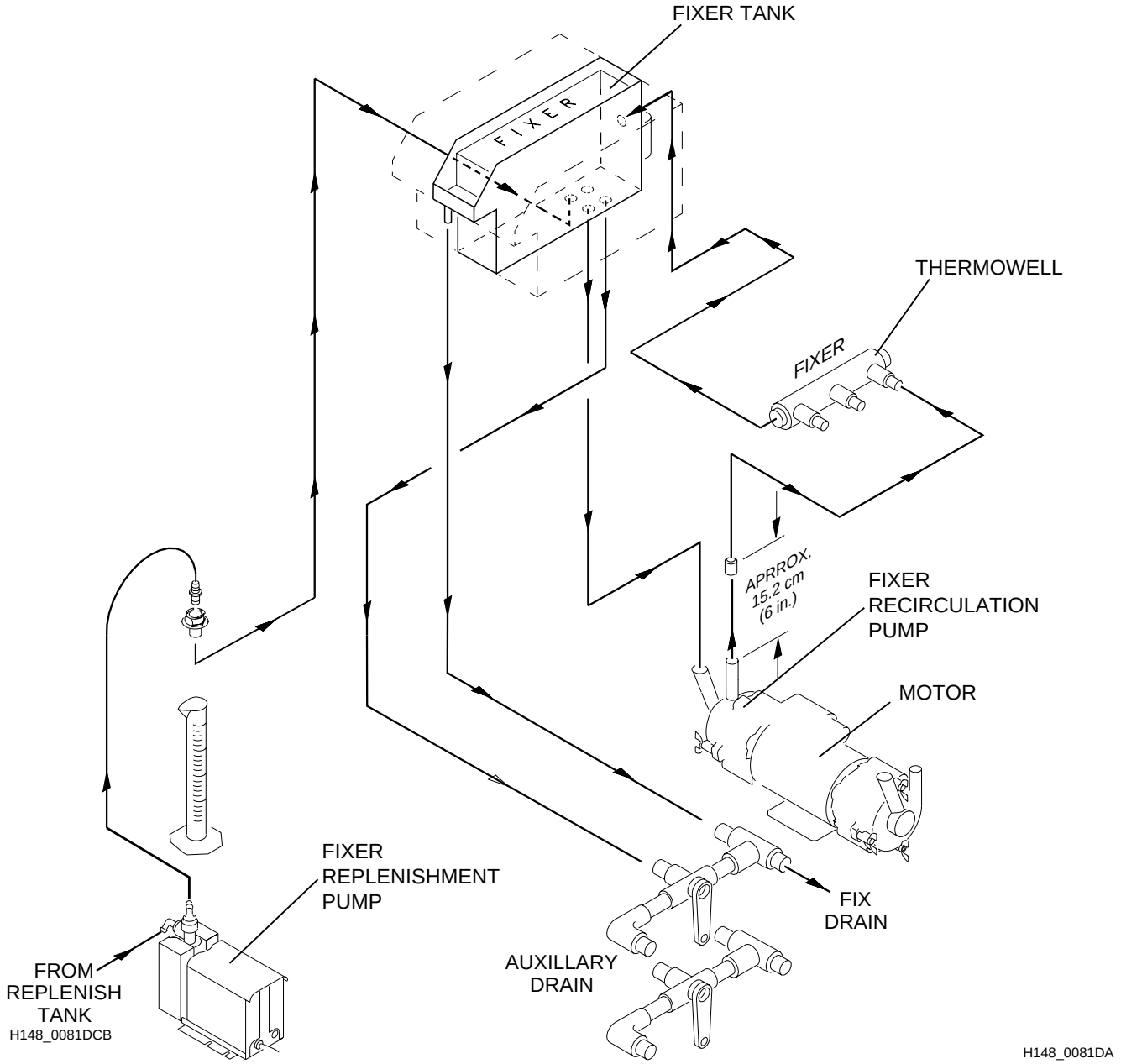

The transport drive moves the film from the DEVELOPER TANK through a CROSSOVER into the FIXER TANK. The fixer solution removes unused silver halide from the film, stopping unnecessary further development of the visible image and increasing the permanency of the visible image. Like the DEVELOPER TANK, the fixer tank can be filled and replenished automatically from an external container of fixer solution. For more information about the replenishment cycle, see Page 27.

Recirculation takes place only when the tanks for both the developer and fixer are full. A LEVEL PROBE in each tank monitors the level of solution. The PROCESSOR has a DUAL-HEADED PUMP, which consists of a MOTOR that is magnetically coupled to the DEVELOPER RECIRCULATION PUMP and the FIXER RECIRCULATION PUMP. The MOTOR drives both PUMPS. The FIXER recirculation pump circulates the fixer solution through a thermowell and the FIXER TANK. When necessary, the FIXER HEATER Hr4 in the THERMOWelL heats the solution.

Note

The control circuit for the recirculation of the fixer is the same as the control circuit for recirculation of the developer; see Page 12.

Fixer Temperature

Overview

The fixer must be heated to a minimum specified temperature to ensure optimum processing of the film.

The THERMOWELL contains a thermistor. The resistance of the THERMISTOR changes inversely with the temperature of the fixer solution. For more information about the control circuit of the thermistor, see Page 33.

Fixer Heating

The fixer heater operates at full capacity when the fixer temperature is below the setpoint temperature. When the temperature is above the setpoint, the HEATER de-energizes.

The fixer solution should reach the setpoint temperature within approximately 20 minutes after you energize the PROCESSOR.

Fixer Cooling

The fixer operates effectively at higher temperatures and does not have to be cooled.

Fixer Temperature Display

The operator can display the fixer temperature by pressing a SOFT KEY on the DISPLAY PANEL.

Control Circuit for Fixer Temperature

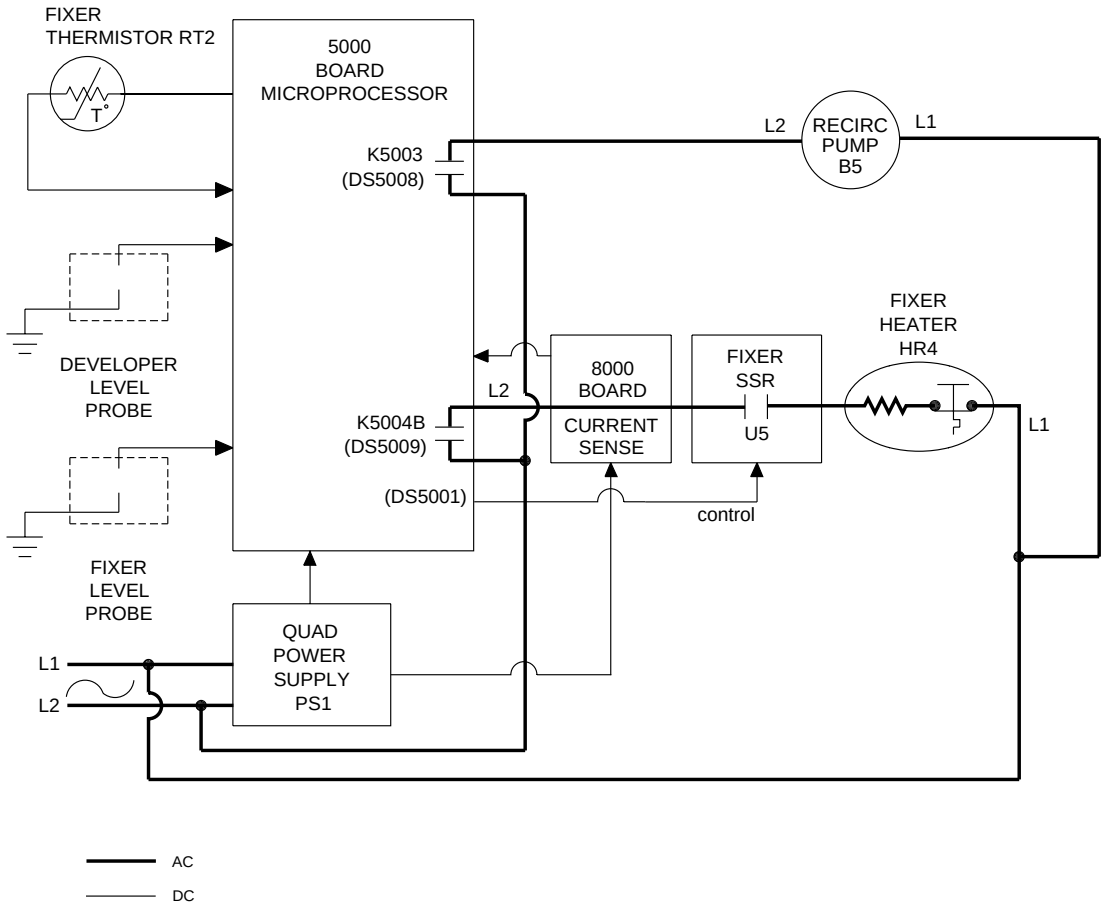

H148_9010DC

The control circuits for the fixer and developer are similar, except that the fixer does not include a cooling circuit. Both circuits use the RelayS K5003 and K5004.

1. Correct levels of solution in each of the TANKS for developer and fixer immerse the LEVEL PROBES, providing separate paths to ground.
2. The MICROPROCESSOR detects the decreased resistance of the immersed LEVEL PROBES and actuates the RELAYS K5003, K5004B and K5004A.
3. The RELAY K5004B enables the FIXER HEATER HR4.The LED DS5009 illuminates when the RELAY K5004B enables HR4.
4. The RELAY K5003 energizes the recirculation pump B5. The LED DS5008 illuminates when the RELAY K5003 energizes B5.
5. The control signal from the 5000 BOARD energizes the SOLID STATE RELAY SSR-U5, which energizes the FIXER HEATER HR4. This HEATER operates as necessary to maintain the setpoint temperature of the fixer solution. The LED DS5001 illuminates when the 5000 BOARD energizes SSR-U5.
6. An A/D CONVERTER on the 5000 BOARD converts the analog resistance of the THERMISTOR to digital data.

7. The MICROPROCESSOR applies a software algorithm that converts the digital data to temperature. The MICROPROCESSOR continuously compares this temperature to a setpoint temperature and determines if the solution requires heating.
8. When the temperature is below the setpoint temperature, the MICROPROCESSOR applies a DC voltage to SSR-U5, energizing the fixer heater.
9. When either the DEVELOPER HEATER or the FIXER HEATER operates, the 8000 BOARD detects current flow from the corresponding HEATER and sends a signal to the 5000 BOARD.

Fixer Temperature Control Errors

- **FIXER THERMISTOR:** If the thermistor **either** opens or shorts, the DISPLAY PANEL displays the error message “Fixer Thermistor Failure”. For more information, see Page 33.
- **A/D CONVERTER:** If the A/D converter malfunctions, the DISPLAY PANEL displays the error message “A/D Converter Failure”.
- **FIXER HEATER:** If the MICROPROCESSOR does not receive the signal from the 8000 BOARD indicating that the DEVELOPER HEATER is operating, the DISPLAY PANEL displays the error message “Developer Heater Failure”.

Wash

System

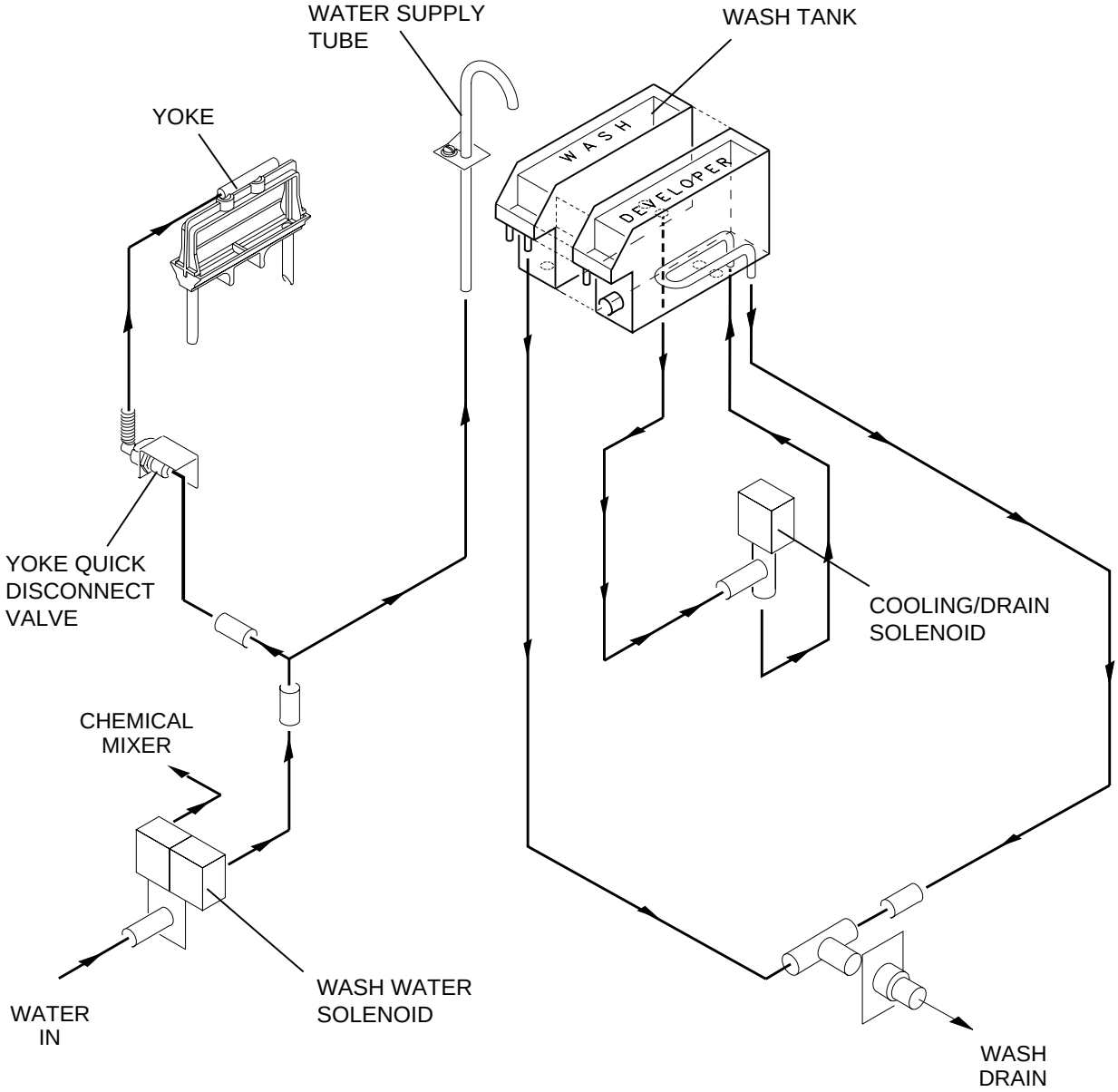

H148_0082DCB
H148_0082DA

Excess solutions remaining on the film can cause artifacts on the film during the drying process and reduce the permanency of the image. The wash TANK supplies fresh water that removes all excess developer and fixer solutions from the film.

The customer's external water supply provides water to the WASH RACK. The temperature of the water must be 4 - 29.4°C (40 - 85°F) and at least 5.5°C (10°F) below the operating setpoint of the developer temperature. The water flows through a 50-micron filter, which the customer supplies, to a connection at the back of the PROCESSOR.

Control Circuit for Wash Water

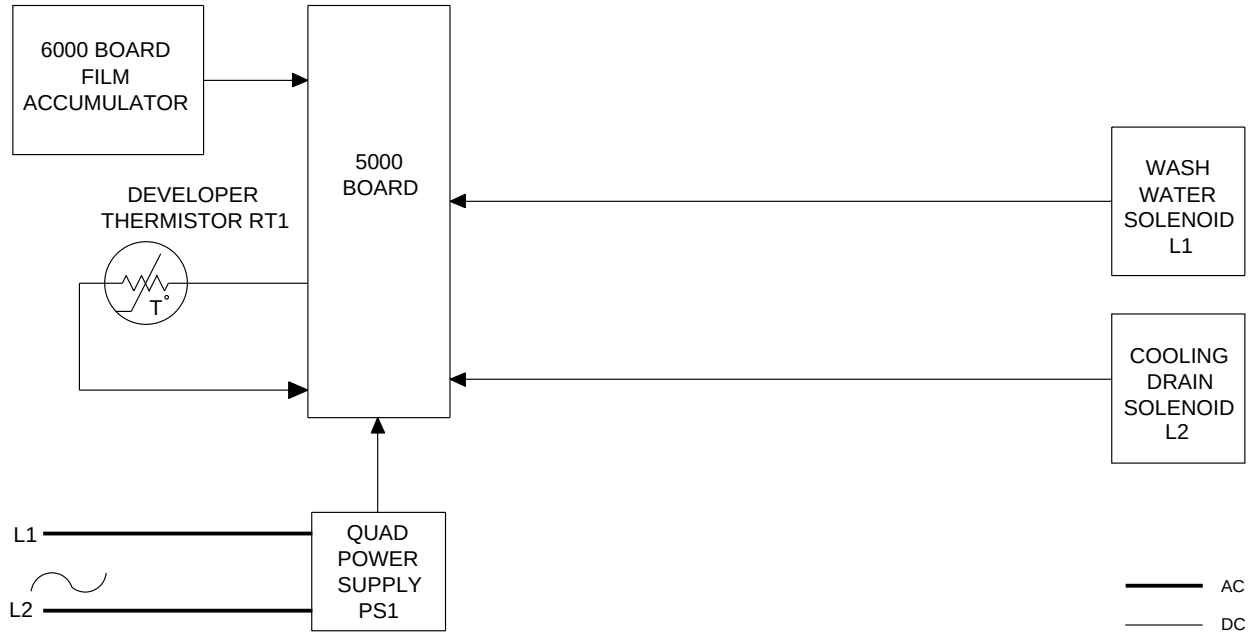

H148_9009HC

The WASH WATER SOLENOID L1

- opens when the leading edge of the film enters the DETECTOR CROSSOVER to allow water to flow at a rate of 3.9 L (1.0 gal) ±10% per minute into the PROCESSOR
- closes approximately 15 seconds after the film exits the WASH RACK, if no additional films enter the PROCESSOR and cooling of the developer is not required.
- opens to allow flow of water onto the HEAT EXCHANGER to cool the developer as necessary

From the WASH WATER SOLENOID, the water flows through the FLOW CONTROL VALVE and the WATER SUPPLY TUBE into the WASH TANK. Water also flows through the YOKE QUICK DISCONNECT VALVE to the YOKE. The YOKE distributes the water to the CROSSOVER TROUGHS, reducing chemical deposits on the CROSSOVER ROLLERS.

Dryer

System

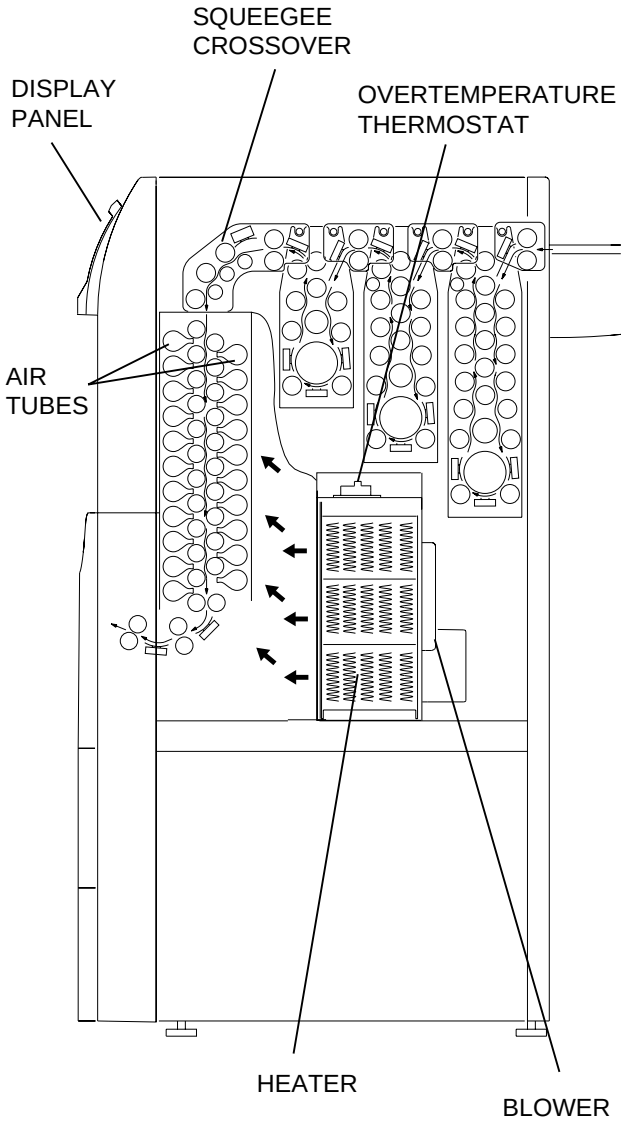

H148_0089CCA
H148_0089CA

The film exits the wash RACK and passes through the squeegee CROSSOVER, which spread remaining drops of water across the film surface to eliminate water spots.

The DRYER BLOWER forces hot air through the air tubes, which circulate the air across both sides of the film as it moves through the DRYER. The DRYER heater heats the air to a temperature of 2 - 68.33°C (70 - 155°F). The temperature of the DRYER can be adjusted in increments of either 1°C or 1°F at the display panel.

If the temperature is greater than 74.4°C (166°F) near the DRYER HEATER, the OVERTEMPERATURE THERMOSTAT opens, de-energizing the DRYER HEATER. The THERMOSTAT must be manually reset before the DRYER HEATER can operate.

The DISPLAY PANEL indicates the setpoint temperature for the dryer.

Dryer Temperature

Control Circuit for Dryer Temperature

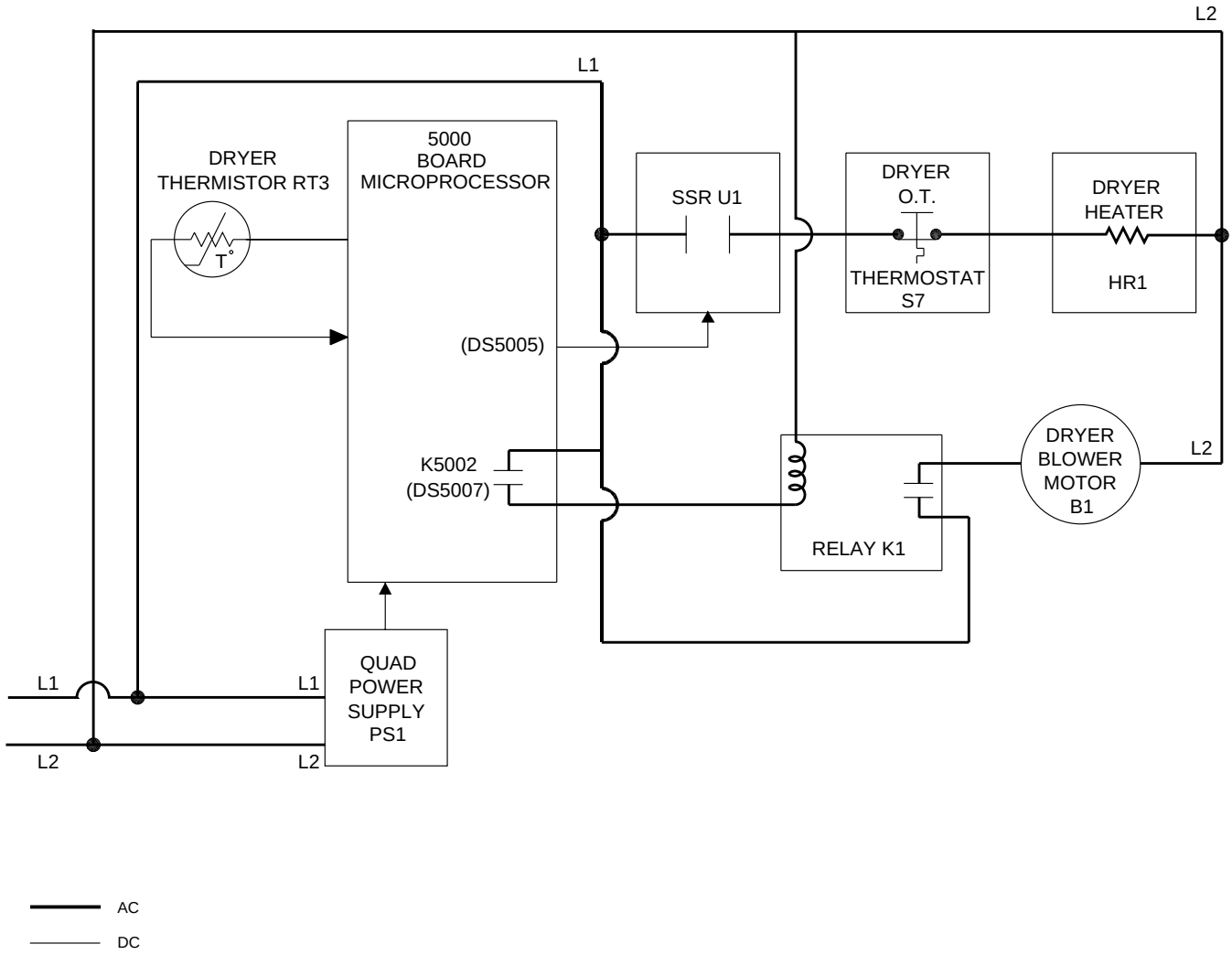

H148_9008DC

When the film accumulator detects film

1. The RELAY K5002 energizes the RELAY K1, energizing the DRYER BLOWER B1. The LED DS5007 illuminates when the 5000 BOARD energizes K5002.
2. The microprocessor applies a software algorithm that converts the resistance of the DRYER thermistor RT3 to temperature. The MICROPROCESSOR continuously compares this temperature to the setpoint temperature.
3. When the temperature decreases below the setpoint temperature, the microprocessor sends a DC signal to the SOLID STATE RELAY SSR-U1, energizing the DRYER HEATER HR1. The LED DS5005 illuminates when the 5000 BOARD energizes SSR-U1.To prevent damage to the DRYER heater, the DRYER HEATER energizes 3 seconds after the MICROPROCESSOR energizes the DRYER BLOWER.

Temperature Control Errors

- **DRYER HEATER:** Under certain conditions, the MICROPROCESSOR checks that the temperature of the air around the THERMISTOR RT3 increases at a minimum rate of 0.3°C (0.5°F) every 2 minutes. If this rate is not correct, the DISPLAY PANEL displays the error message “Loss of Heater Dryer Ability”. The conditions under which the MICROPROCESSOR checks the rate of heating include when:
  - The DRYER HEATER is operating.
  - No film is in the PROCESSOR.
  - After the PROCESSOR completes the self-check.
- **DRYER THERMISTOR:** If the thermistor opens or shorts, the DISPLAY PANEL displays the error message “Dryer Thermistor Failure”. For more information, see Page 33.
- **A/D CONVERTER:** If the A/D converter malfunctions, the DISPLAY PANEL displays the error message “A/D Converter Failure”.
- **OVERTEMPERATURE THERMOSTAT:** If the temperature near the DRYER HEATER is greater than 74.4°C (166°F), the OVERTEMPERATURE thermostat opens, de-energizing the DRYER HEATER. The MICROPROCESSOR indicates an overtemperature condition and displays the error message “Dryer Over Maximum Temperature”. The BLOWER and the transport drive continue to operate.

Section 5: Replenishment

Overview

During film processing, the film absorbs developer and fixer solutions. The operator must add new chemicals periodically to maintain an effective level of chemical activity. The MICROPROCESSOR monitors film usage and uses an algorithm to automatically replenish these solutions from an external source or an AUTOMIXER. This algorithm determines when to energize the replenishment pumps for both developer and fixer solutions. Using the DISPLAY PANEL, the operator can change the amount of replenishment added during each replenishment cycle. The new solutions are pumped directly into the TANKS for the developer and fixer and enter the recirculation system.

The replenishment pumps can be disabled to allow maintenance of the PROCESSOR. The operator can disable the replenishment pumps using one of 2 methods:

1. **Removing the top cover** disables the Replenishment pumps and displays the error message “Top Cover not closed”.
2. **Selecting “Pump Disable”** at the DISPLAY PANEL disables the replenishment pumps and displays the error message “Replenishment Pumps Disabled”.

The PROCESSOR provides 2 modes of replenishment: Automatic and Flooded. The operator can select either mode at the DISPLAY PANEL. Both modes use the film area, which the film accumulator determined, to calculate the necessary replenishment.

Replenishment Modes

Calculation of Replenishment

The software calculates the length of time that the PUMPS should be energized by dividing the *replenishment volume*, which is stored in memory, by the *replenishment flow rate*.

Automatic

The Automatic Replenishment mode is standard and occurs under 2 conditions:

- High Film Usage occurs when the PROCESSOR is energized for 24 hours and processes more than 75 sheets of film in that 24 hours. The software algorithm starts the replenishment cycle each time the PROCESSOR processes approximately 1500 cm^2 (238 $in.^2$) of film. This area is equal to one 35 x 43 cm (14 x 17 in.) sheet of film. The operator can adjust, within the range of 20 mL to 500 mL, the volume of replenishment that is added for each 1500 cm^2 (238 $in.^2$) of processed film. The default volumes are 60 mL of developer and 85 mL of fixer.
- Low Film Usage occurs when the PROCESSOR processes less than 75 sheets of film within 24 hours. During that time, the PROCESSOR must be energized either for the full 24 hours or twice, the second time for more than 3.5 hours. In either application, the different replenishment volumes depend on the number of films processed. The replenishment pumps automatically energize every half hour during a 4-hour period:

Film Count	Replenishment Added during 4 Hours
less than 55	1 liter (125 mL / 1/2 hour)
55 - 65	750 mL (93 mL / 1/2 hour)
66 - 74	400 mL (50 mL / 1/2 hour)

Flooded

The PROCESSOR uses the flooded replenishment mode in very low-volume applications: 25 or less sheets of 35 x 43 cm (14 x 17 in.) film (or equivalent film area) processed in 24 hours. In this mode replenishment occurs every 5 minutes of operation and after 1500 cm^2 (238 $in.^2$) of film has been processed. The software determines the amount of replenishment. The operator can modify this amount, within the range of 20 mL to 500 mL.

Filling the TANKS for the Developer and Fixer:

During Initialization or Normal Operation

If the solution level in the PROCESSOR is low during initialization or normal operation, the corresponding replenishment pump energizes.

Tank-Fill Mode

At installation or after periodic maintenance, select this mode at the DISPLAY PANEL to fill an empty TANK. This mode de-energizes the DRYER heater, DRYER blower, and drive motor. The DISPLAY PANEL displays the error message “Tanks Currently Being Filled”.

When the level PROBES detect correct solution levels, the MICROPROCESSOR disables the “Tank Fill Mode,” activates the reCIRCULATION pump, enables the heater, blower, and drive motor. The DISPLAY PANEL removes the error message.

Replenishment Errors

When the developer or fixer solutions do not reach the correct level within the allowed time limit, the error message “Developer Tank Fill” or “Fixer Tank Fill” occurs, and the MICROPROCESSOR de-energizes the pumps. The allowed time limits are 2 minutes during initialization or normal operation and 10 minutes if the PROCESSOR is in the “Tank-Fill Mode.”

Control Circuit for Replenishment

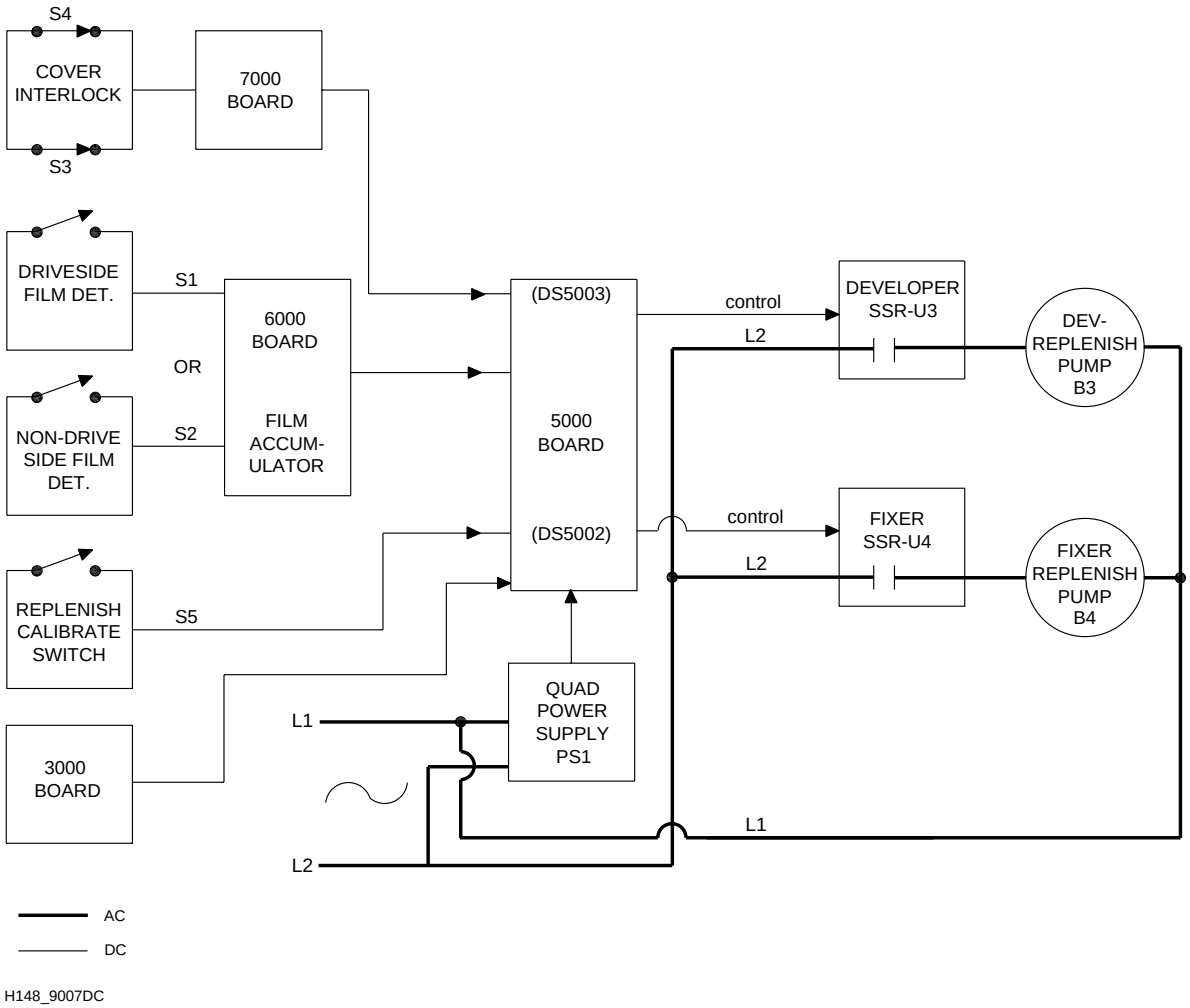

With S3 and S4 closed, any of the following actions causes the MICROPROCESSOR to actuate this circuit:

- When the operator first energizes the PROCESSOR.
- In the AUTOMATIC or FLooded replenishment Modes, when S1 or S2 actuates and the 6000 BOARD detects 0.15 m2 (238 in.2) of film.
- If the operator selected either “Tank Fill” or “Calibration” at the 5000 Display Board, the microprocessor actuates the circuit when necessary.
- If the operator presses and holds the “Calibration Switch” for more than 5 seconds.
- Every 5 minutes during Flooded Replenishment Mode and as necessary during Low Film Usage in the Automatic Replenishment Mode.
- When the LEVEL PROBES detect low levels of solutions.

To actuate the replenishment circuit, the microprocessor sends DC voltage to SSR-U3 or SSR-U4 or both of these RELAYS, which then provide AC voltage to the replenishment pumps.

When replenishment is complete, the MICROPROCESSOR removes the DC voltage from the solid state relays, de-energizing the PUMPS.

Calibration

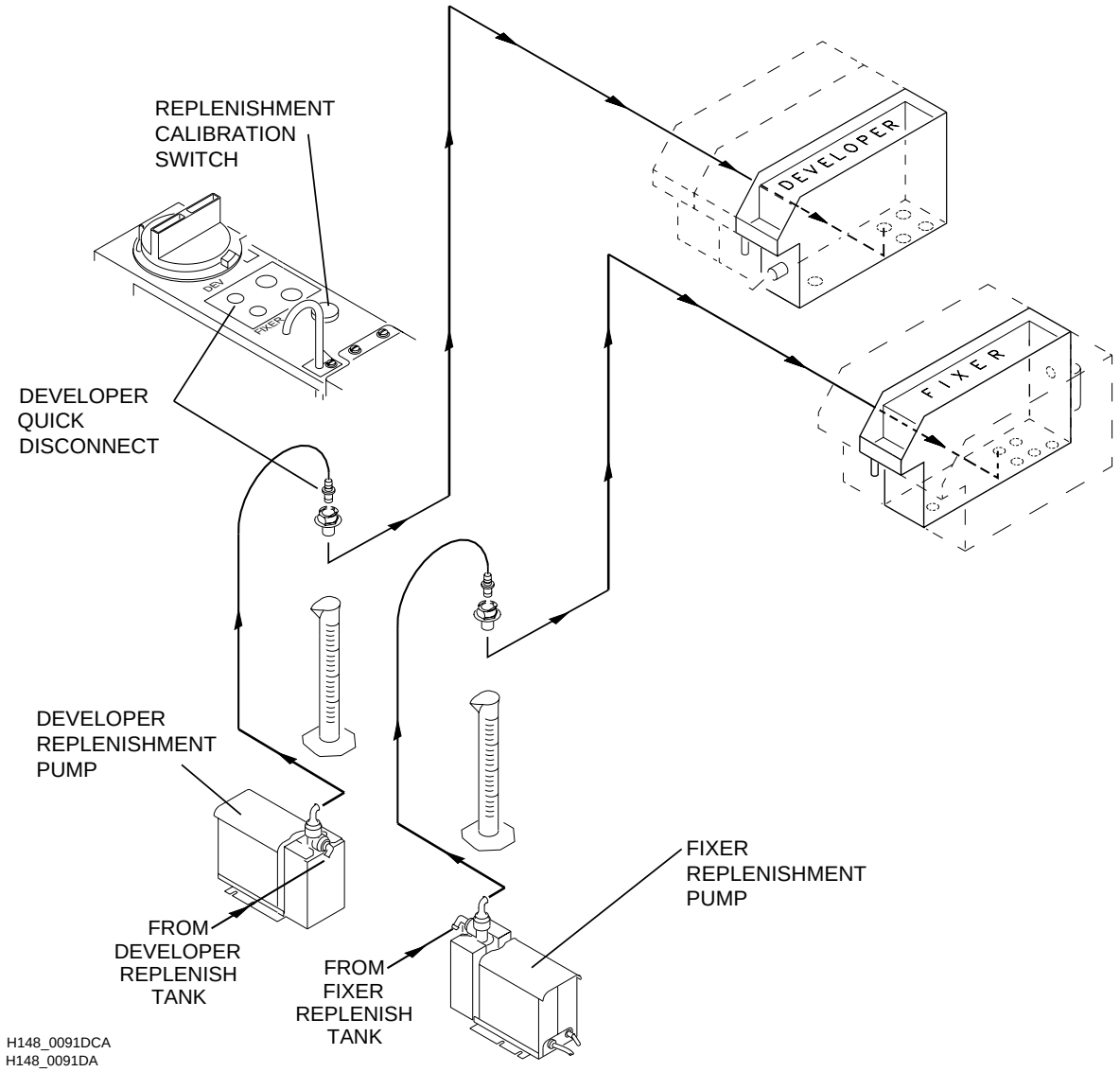

The operator enables the calibration procedure for the appropriate PUMP, using the menus displayed at the display panel. See the procedure for “Calibrating the Replenishment System” in the Operator Manual, Publication Part No. 5B6729.

- The operator activates the REPLENISHMENT CALIBRATION SWITCH.
- The MICROPROCESSOR energizes the REPLENISHMENT PUMP for a fixed amount of time, approximately 5 seconds, dispensing a volume of solution.
- The operator measures the volume (mL) of solution and enters that measurement at the DISPLAY PANEL.
- The MICROPROCESSOR calculates the correct volume rate (mL/second) from the measured volume and the and the corresponding operating time of the REPLENISHMENT PUMP.

Note

The volume measured during the calibration procedure is not the same as the replenishment volume added to the TANK for a 14 x 17 in. (or equivalent area) film.

Replenishment Verification: With the TOP COVER removed, the operator presses and holds the replenishment calibration switch for 5 seconds to energize both pumpS. The PUMPS dispense a volume specified for a 1535 cm^2 (238 $in.^2$) of film.

Section 6: Standby Mode

The Standby Mode provides conservation of energy and at the same time the capability to quickly begin processing film. If no new film enters the PROCESSOR, the PROCESSOR will enter the Standby Mode approximately 15 seconds after the last film has exited. Based on the transport speed and length of the film path, the software determines when the last film exited the PROCESSOR. When the PROCESSOR enters the Standby Mode, the MICROPROCESSOR:

- closes the WASH WATER SOLENOID, unless water is needed for developer cooling and for wetting the ROLLERS
- maintains the developer and fixer temperatures
- maintains the temperature in the DRYER
  1. de-energizes the dryer BLOWER and the DRYER HEATER for 4 minutes
  2. energizes the DRYER BLOWER and reads the temperature of the air in the DRYER RACK
  3. energizes the DRYER HEATER if the temperature in the DRYER is below the setpoint temperature
  4. de-energizes for 4 minutes both the DRYER BLOWER and DRYER HEATER when the temperature in the DRYER equals the setpoint temperature
- operates the transport drive, depending on which of the 2 Standby Modes the customer selects: continuous or interval.

In the “Continuous Standby Mode” the transport drive remains energized, operating at a low speed 86.4 cm/minute (34 in./minute) after the film exits the PROCESSOR.

In the “Interval Standby Mode” the PROCESSOR operates in cycles of 90-second intervals and 8-minute intervals. At the beginning of each 90-second interval:

- The 90-second timer on the MICROPROCESSOR begins.
- The TRANSPORT DRIVE operates at the setpoint speed.
- The WASH WATER SOLENOID opens every 4th cycle, wetting the ROLLERS.

At the beginning of each 8-minute interval:

- The 90-second timer expires, and the 8-minute timer begins.
- The TRANSPORT DRIVE de-energizes.
- The WASH WATER SOLENOID closes.

The PROCESSOR automatically enters the operating mode when the film accumulator detects film or the 2000 board receives a signal from a peripheral device.

Section 7: Sleep Mode

The “Sleep Mode” allows the customer to disable most of the PROCESSOR, conserving energy. The operator selects the “Sleep Mode” at the DISPLAY PANEL or at the INTERFACE CONTROL PANEL. Also, the operator can program the PROCESSOR to automatically energize at a selected time. The DISPLAY PANEL displays the time at which the PROCESSOR will exit the Sleep Mode.

If the operator does not program the PROCESSOR to automatically energize at a selected time, the DISPLAY PANEL displays the message “Processor in Sleep Mode.”

When the PROCESSOR enters the Sleep Mode, the MICROPROCESSOR

- de-energizes all HEATERS and the RECIRCULATION PUMPS
- disables all LEVEL PROBES
- monitors the SLEEP SWITCH
- monitors the TIMER
- displays at the DISPLAY PANEL the “wake-up” time if the operator set the TIMER
- executes the optional “Roller Jog” or optional “Cool Down” (if selected)

The operator can select 2 options for the “Sleep Mode”: “Roller Jog” option and “Cool Down” option. The “Roller Jog” option drives the transport drive periodically to prevent chemicals from accumulating on the ROLLERS. The “Cool Down” option energizes the DRYER BLOWER to cool the solutions slowly, preventing condensation. The following table describes the operations that occur for different combinations of these 2 options.

“Cool Down” On “Roller Jog” On	Cool Down Phase: • The EXHAUST BLOWER operates for 3 hours. • The transport drive stops operating and the WASH WATER SOLENOID closes for 10 minutes • The transport drive operates and the WASH WATER SOLENOID opens for 90 seconds • The COOLING/DRAIN SOLENOID opens. • The RECIRCULATION PUMPS operate when the transport drive operates and the solution levels are not low.
	Dormant Phase: At the end of 3 hours: • The EXHAUST BLOWER de-energizes. • The transport drive and the WASH WATER SOLENOID operate in cycles: 30 minutes off, 90 seconds on.
“Cool Down” Off “Roller Jog” On	Same as Dormant Phase above.
“Cool Down” On “Roller Jog” Off	Cool Down Phase: Same as Cool Down Phase above.
	Dormant Phase: At end of 3 hours • The EXHAUST BLOWER does not operate. • The transport drive does not operate.
“Cool Down” Off “Roller Jog” Off	• The EXHAUST BLOWER does not operate. • The transport drive and the WASH WATER SOLENOID do not operate.

Section 8: THERMISTORS

The MICROPROCESSOR maintains the correct temperatures of the developer and fixer solutions and of the DRYER. The A/D CONVERTER on the 5000 BOARD sends digital data that indicates the changing resistance of the THERMISTOR to the MICROPROCESSOR, which applies a software algorithm that converts this digital data to temperature.

The MICROPROCESSOR checks that the A/D CONVERTER and the THERMISTORS function correctly.

To check the operation of the A/D CONVERTER, the MICROPROCESSOR monitors the resistance of a precision resistor (also on the 5000 BOARD) approximately every 5 seconds. If the value of this resistor is not correct for 5 consecutive readings, the MICROPROCESSOR determines that the A/D CONVERTER malfunctioned and displays the fatal error message “Analog-to-Digital Converter Failure” at the DISPLAY PANEL.

A malfunction of the THERMISTOR occurs if it opens or shorts. To check each THERMISTOR, the MICROPROCESSOR determines whether the digital data from the A/D CONVERTER is within the correct limits. If this data is outside of the correct limits for 5 consecutive readings, the MICROPROCESSOR determines that the thermistor is opened or shorted and displays a fatal error at the DISPLAY PANEL:

- “Developer Thermistor Failure”
- “Fixer Thermistor Failure”
- “Dryer Thermistor Failure”

Section 9: DISPLAYS

DISPLAY PANEL

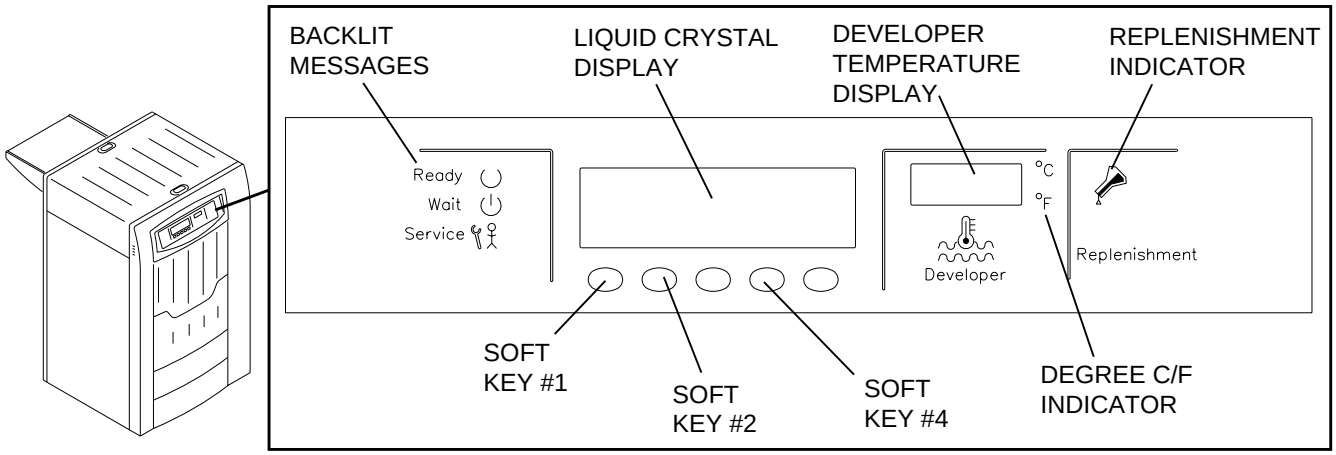

H148_0105BCC
H148_0105BA

The display panel on the front of the PROCESSOR allows the operator to select operating modes, change some parameters, and monitor the status of the PROCESSOR. The 5000 DISPLAY BOARD controls the circuit for the DISPLAY PANEL.

The 3 BACKLIT MESSAGES indicate operating status:

- The “Ready” light indicates when the PROCESSOR is ready to receive film.
- The “Wait” light indicates that the PROCESSOR has not reached optimum operating conditions.
- The “Service” light indicates when the PROCESSOR has an error that the operator cannot repair.

The LIQUID CRYSTAL DISPLAY displays menus from which the operator can select the modes and control values for the PROCESSOR. The operator uses the 5 soft keys to make selections. The functions of the soft keys change according to the displayed menu. Some of the these selections include contrast of the display, operating mode, and operating temperatures. An access code is required to change default values preset at the factory or to change to or from the K/RA cycle.

The DEVELOPER TEMPERATURE DISPLAY indicates the actual developer temperature in either °C or °F.

The REPLENISHMENT INDICATOR illuminates when both REPLENISHMENT PUMPS are energized.

CONTROL PANEL

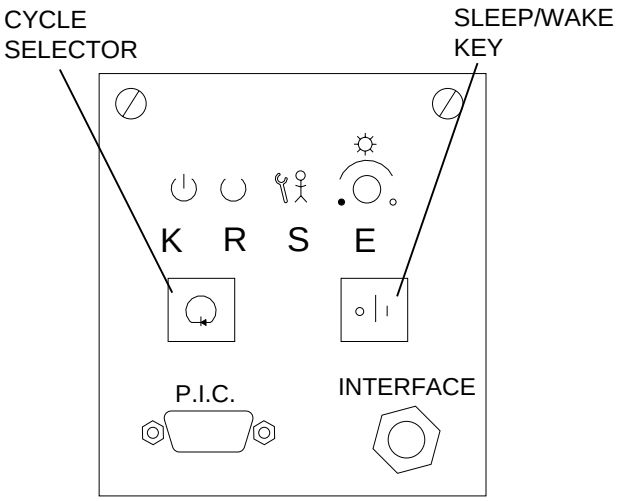

H150_0159ACA
H150_0159AA

The control panel provides an electrical interface for the PROCESSOR:

The Interface Jack receives a command from an external device to place the PROCESSOR in operating mode.

The SLEEP/WAKE SWITCH allows the operator to command the PROCESSOR to enter or exit the Sleep Mode.

The **CONTROL PANEL** displays 3 messages indicating the operating status of the PROCESSOR: “Ready”, “Wait”, and “Service”. These messages are the same as the messages that the display paneL displays. See Page 34 for more information about these messages.

The Cycle SelectOR allows the operator to change the operating cycle: “Rapid,” Standard,” or “Extended.” The **CONTROL PANEL** indicates the selected processing cycle.

Description of the Data Lines for the PIC

Line	Signal Description	Type
1	Shield	ground
2	Transmit Data (TxD)	output
3	Receive Data (RxD)	input
4	Request to Send (RTS)	output
5	Clear to Send (CTS)	input
6	Common / Return	input
7	Processor Cycle (C0)	output
8	Processor Cycle (C1)	output
9	Run	input
10	Alarm	output
11	Service	output
12	Ready	output
13	Film Feed	output
14	Sleep / Cycle Select	input
15	+5 V DC (1 A maximum)	output

The Processor Interface Connector (PIC) provides RS-232 serial data lines, allowing communications between the PROCESSOR and a computer. The table at left provides a description of the signal on each data line of the PIC.

Logic Levels of the 4 Cycles for the PROCESSOR

Cycle	C1	C0
K/RA	1	1
Rapid	1	0
Standard	0	1
Extended	0	0

Note

- Logic level “0” occurs when the voltage is less than or equal to 0.5 V at 4mA.
- Logic level “1” occurs when the voltage is greater than or equal to 3.8 V at 4mA.

Section 10: Power Distribution

AC Distribution

See the schematic of the power distribution in the Diagrams, Publication Part No. 5B6344. The PROCESSOR operates on single-phase or 3-phase nominal 200 V AC to nominal 240 V AC. The Site Specifications, Publication Part No. 5B6338 provide a complete list of all power configurations for the 5000 RA Processor.

The CIRCUIT BREAKER CB1 directs the main power to the transformer. Depending on the power configuration of the site, the transformer raises or lowers the input voltage and distributes it across load-A, load-B, load-C, and load-D. Each load is routed through an EMI filter on the COMPONENT PLATE.

- **Load A**
  - dryer blower motor B1
  - exhaust fan motor B2
  - developer heater HR3
  - DRYER BLOWER RELAY K1
  - replenishment pump MOTORS B3 and B4
  - recirculation pump motor B5
  - SOLID STATE RELAYS SSR-U2, SSR-U3, and SSR-U4.
- **Load B**
  - dryer heater HR1
  - SOLID STATE RELAY SSR-U1
  - overtemperature thermostat S7
- **Load C**
  - fixer heater HR4
  - SOLID STATE RELAY SSR-U5
  - power supplIES PS1, PS2, and PS3.
- **Load D**
  - safelight receptacle

DC Distribution

Except for the DC DRIVE MOTOR, the PROCESSOR uses AC power to drive the MOTORS.The QUAD POWER SUPPLY PS1 converts the AC voltage into 4 DC voltages: +5, +12, -12, and +24. Then PS1 distributes the DC voltages:

- 2000 Board (+5, +24 V DC)
- 3000 Board (+5, +12, -12 V DC)
- 5000 Board (+5, +12, -12, +24 V DC)
- 6000 Board (+12, -12 V DC)
- 7000 BOARD (+24 V DC)
- 8000 BOARD (+5 V DC)

The +5 V DC POWER SUPPLY PS2 provides power to the 2000 BOARD. This separate POWER SUPPLY provides isolation from external equipment connected to the PROCESSOR, for example, a FILM FEEDER.

The +24 V DC POWER SUPPLY PS3 provides power to the 7000 INTERLOCK BOARD, DRIVER MOTOR CONTROLLER, and the DC DRIVE MOTOR.

The 5000 BOARD contains 5 electromechanical relays (+24 V DC):

- K5002 energizes the RELAY K1 (230V DC) in the ELECTRICAL BOX and energizes the DRYER BLOWER.
- K5003 energizes the recirculation pumpS.
- K5004A and K5004B (contained in one RELAY) enable the developer HEATER and fixer heater.
- K5005 energizes the safelight receptacle.
- K5006 energizes the EXHAUST BLOWER.

The 5 SOLID STATE RELAYS (+5 V DC) control the following components:

- SSR-U1: dRYER heater HR1
- SSR-U2: DEVELOPER HEATER HR3
- SSR-U3: developer replenishment pump B3
- SSR-U4: fixer replenishment pump B4
- SSR-U5: fixer heater HR4

Section 11: Publication History

Print Date	Pub. No.	ECO No.	Affected Pages	File Name	Notes
October 1995	5B6341	2649-029	All	tg3425_1.doc	First printing.
January 1996	5B6341	2649-062	Covers	tg3425_1_062.doc	Graphic Unification.
January 1998	5B6341	2649-062	All	tg342500.fm	First CD-ROM printing. Content is identical to January 1996 version; formatting may vary from print version.

Kodak and *X-Omat* are trademarks.