Publication No. 5B6747
January 1996
Supersedes October 1995

PREVENTIVE MAINTENANCE for the *Kodak X-Omat* 5000 RA PROCESSOR

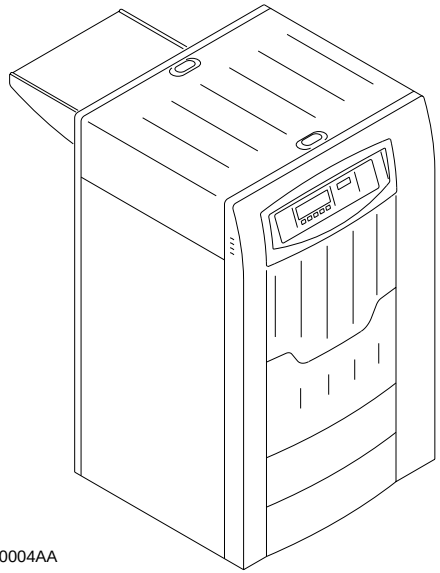

H148_0004AA

© Eastman Kodak Company

PLEASE NOTE The information contained herein is based on the experience and knowledge relating to the subject matter gained by Eastman Kodak Company prior to publication.

No patent license is granted by this information.

Eastman Kodak Company reserves the right to change this information without notice, and makes no warranty, express or implied, with respect to this information. Kodak shall not be liable for any loss or damage, including consequential or special damages, resulting from any use of this information, even if loss or damage is caused by Kodak's negligence or other fault.

Important

Reliable operation of the PROCESSOR requires that all parts are cleaned, adjusted, and lubricated correctly. More frequent maintenance may be necessary because of site characteristics or actual usage. The following guidelines are for PROCESSORS installed according to the Site Specifications, Publication Part No. 5B6338.

Table of Contents

Description	Page
Weekly Preventive Maintenance	3
Monthly Preventive Maintenance	5
3-Month Preventive Maintenance	7
Preventive Maintenance Schedule	10
Publication History	11

Section 1: Weekly Preventive Maintenance

Important

The operator of the PROCESSOR should perform the preventive maintenance procedures in this section weekly.

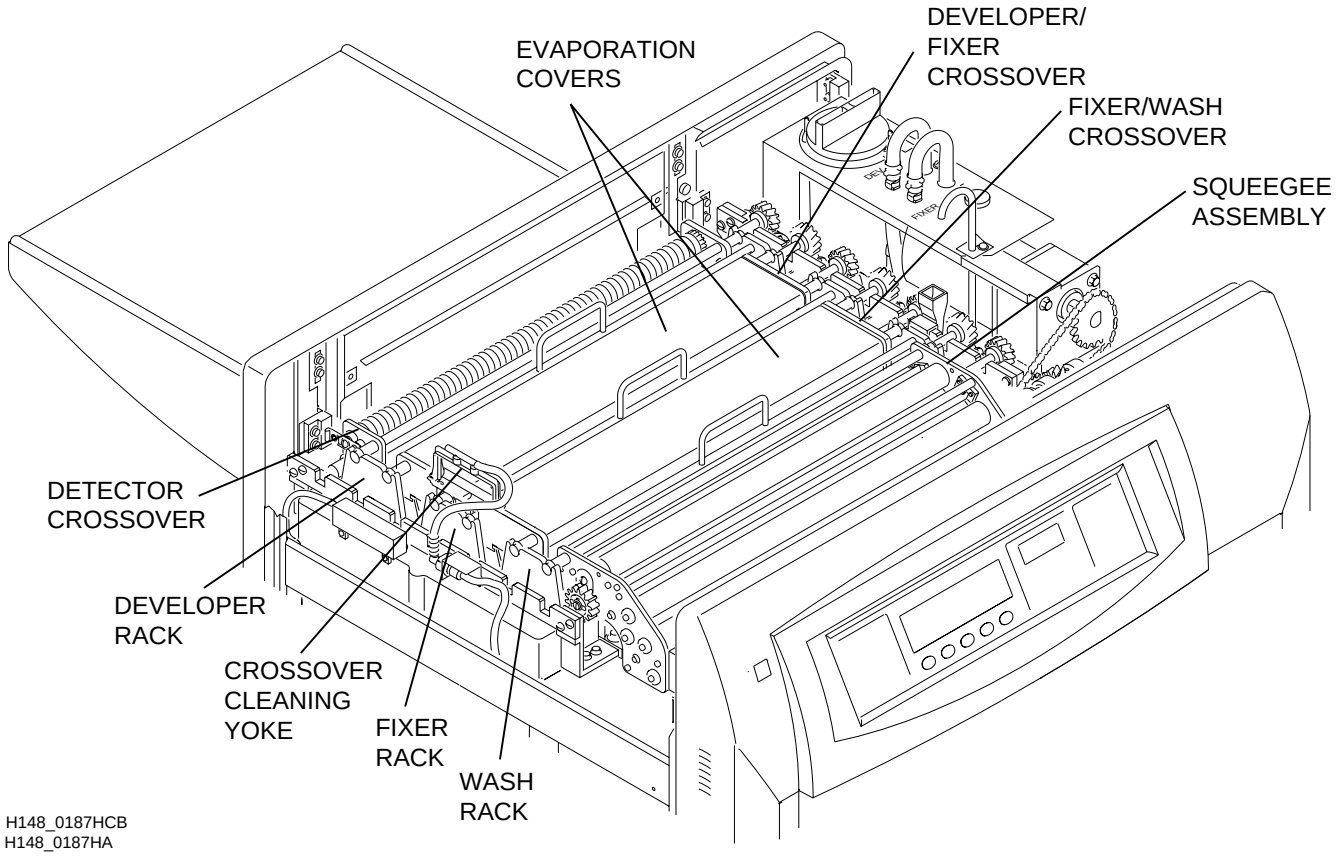

[1] De-energize the PROCESSOR.

[2] Remove the TOP COVER.

[3] Remove the EVAPORATION COVERS.

[4] Disconnect and remove the YOKE from the CROSSOVERS.

[5] Remove:

a. all CROSSOVERS

b. WASH RACK

[6] Rinse the 3 CROSSOVERS and the WASH RACK with warm water not to exceed 44[degree]C (110[degree]F). Wipe the ROLLERS and the GUIDE SHOES with a damp, soft, synthetic sponge.

[7] Allow the DETECTOR CROSSOVER to air dry before you install it in the PROCESSOR.

[8] Check that all the ROLLERS on all the CROSSOVERS and on the WASH RACK rotate freely.

[9] Check the squareness of the CROSSOVERS and the WASH RACK. See the procedures in Adjustments and Replacements, Publication Part No. 5B6340.

[10] Check that the CROSSOVER TROUGHS are not broken or cracked.

[11] Wipe any deposits from the processing section of the PROCESSOR.

Important

When you install the parts in the following steps, check that each part seats firmly.

[12] Install:

a. WASH RACK

b. all CROSSOVERS

[13] Connect the QUICK DISCONNECT VALVE.

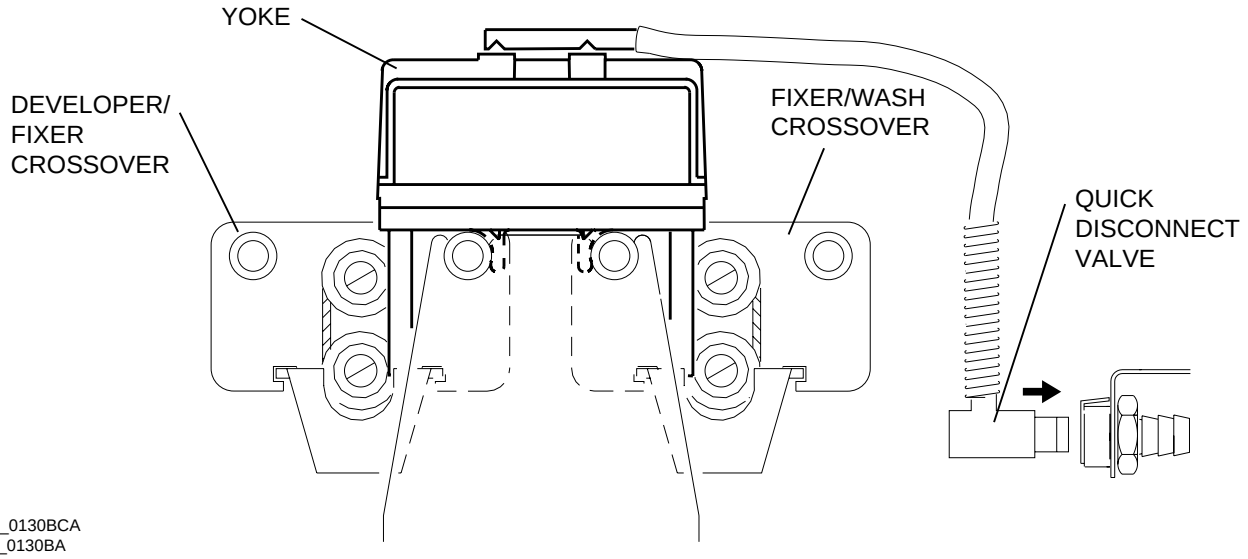

H148_0130BCA
H148_0130BA

[14] Install:

a. YOKE

b. EVAPORATION COVERS

c. TOP COVER

[15] Energize the PROCESSOR.

[16] Process a test film and check for correct operation of the PROCESSOR.

Section 2: Monthly Preventive Maintenance

Important

Completion of the monthly preventive maintenance procedures is recommended to ensure the optimum reliability of the PROCESSOR.

[1] De-energize the PROCESSOR.

[2] Remove the TOP COVER.

[3] Remove the following parts:

a. YOKE QUICK DISCONNECT and YOKE

b. EVAPORATION COVERS

c. all CROSSOVERS

d. WASH RACK

e. AIR TUBES

Caution

To prevent contamination of the developer and fixer solutions when you remove the FIXER RACK and the DEVELOPER RACK, place the SPLASH GUARD between the DEVELOPER TANK and the FIXER TANK. Use the DRIP TRAY whenever you remove or install the RACKS.

[4] Install the SPLASH GUARD between the DEVELOPER TANK and the FIXER TANK.

[5] Remove the following parts:

a. FIXER RACK

b. SPLASH GUARD

c. DEVELOPER RACK

[6] Rinse all the RACKS and the CROSSOVERS with warm water, not to exceed 44[degree]C (110[degree]F) or less. Wipe the ROLLERS and the GUIDE SHOES with a soft, synthetic sponge.

[7] Remove and clean the CROSSOVER TROUGHS. Check that the holes in the CROSSOVER TROUGHS are free from biological growth or other obstructions.

[8] Install the CROSSOVER TROUGHS.

[9] On all RACKS, check that:

a. all ROLLERS rotate freely

b. ROLLERS are clean and smooth

c. GEARS do not have excessive wear

d. BEARINGS do not have excessive wear

e. SPRINGS are not broken, missing, or corroded

[10] If necessary, install new parts.

[11] Check the RACKS for squareness. If necessary, see the procedure in the Adjustments and Replacement, Publication Part No. 5B6340.

[12] Check that the SLOTS in the AIR TUBES are clean. If necessary, do the additional steps below.

a. Remove the BAFFLES from the AIR TUBES.

b. Rinse the BAFFLES with water.

c. Clean the AIR TUBES with a bottle brush and rinse with water.

[13] Wipe any deposits from the processing section of the PROCESSOR.

[14] Change the DEVELOPER FILTER. If necessary, see the procedure in the Adjustments and Replacements, Publication Part No. 5B6340.

[15] Allow the DETECTOR CROSSOVER to air dry before you install it in the PROCESSOR.

[16] Clean the YOKE. Check that the holes in the YOKE are free of biological growth and other obstructions.

[17] Install the RACKS.

Important

When you install the parts in the following steps, check that each part seats firmly.

[18] Install:

a. CROSSOVERS

b. YOKE and YOKE QUICK DISCONNECT

c. EVAPORATION COVERS

[19] Clean the REPLENISHMENT STRAINERS that are between the REPLENISHMENT TANKS and the REPLENISHMENT PUMPS.

[20] Check the water supply FILTER. If necessary, change the FILTER.

Caution

- Any obstruction such as biological growth, small bends, or an upward sloping WASH DRAIN HOSE can cause wash water to return to the WASH TANK causing an overflow of water.
- Concentrations of chlorine bleach higher than 10% or allowing the chlorine bleach to remain in the PROCESSOR for longer than 30 minutes can cause damage to the PROCESSOR.

[21] Check the WASH DRAIN for biological growth, small bends, or other obstructions. To remove biological growth do the steps below:

a. Fill the WASH TANK and DRAIN with a 10% solution of chlorine bleach.

b. Wait a **minimum of 20 minutes and a maximum of 30 minutes.**

c. Drain the chlorine bleach solution and rinse the TANK and DRAIN thoroughly with water before you return the PROCESSOR to normal use.

Warning

- Drains must be made of chemically resistant, non-corrosive material. Use PVC or the equivalent.
- The drain must have a minimum diameter of 7.6 cm (3 in.) and be free of obstruction.
- Drain service must comply with all local codes.

[22] Correctly route the WASH DRAIN HOSE to down toward the WASH DRAIN. If necessary, install new 3/4 x 60 in. FORMED TUBING, Part No. 264986.

[23] Energize the PROCESSOR.

[24] Process a test film and check for correct operation of the PROCESSOR.

Section 3: 3-Month Preventive Maintenance

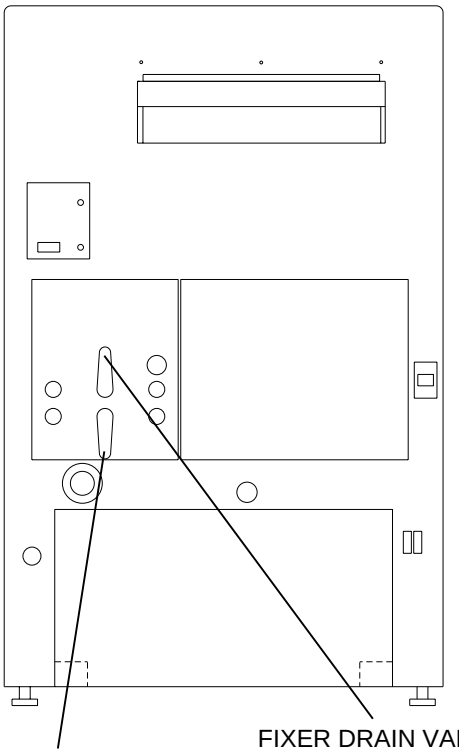

H148_0001GCB
H148_0001GA

[1] De-energize the PROCESSOR.

[2] Lift the TOP COVER.

[3] Open the FIXER and DEVELOPER DRAIN VALVES to drain the solutions from the PROCESSOR.

[4] Remove the following parts:

a. YOKE QUICK DISCONNECT and YOKE

b. EVAPORATION COVERS

c. all CROSSOVERS

d. WASH RACK

e. SQUEEGEE ASSEMBLY

f. AIR TUBES

Caution

To prevent contamination of the developer and fixer solutions when you remove the FIXER RACK and the DEVELOPER RACK, place the SPLASH GUARD between the DEVELOPER TANK and the FIXER TANK. Use the DRIP TRAY whenever you remove or install the RACKS.

[5] Install the SPLASH GUARD between the DEVELOPER TANK and the FIXER TANK.

[6] Remove the following parts:

a. FIXER RACK

b. SPLASH GUARD

c. DEVELOPER RACK

Warning

- Carefully follow all safety precautions and directions included with the *Kodak* FIXER/WASH SYSTEM CLEANER and *Kodak* DEVELOPER SYSTEM CLEANER AND NEUTRALIZER.
- The RACKS in the PROCESSOR have hollow ROLLERS. Use the instructions for cleaning RACKS with hollow ROLLERS. Do not immerse RACKS with hollow ROLLERS in SYSTEM CLEANER. SYSTEM CLEANER that remains inside the ROLLERS will contaminate the processing solutions.
- When circulating SYSTEM CLEANER or water through the recirculation system, energize the RECIRCULATION PUMP using the internal diagnostics. See Diagnostics, Publication Part No. 5B6342. Otherwise the following may occur:
  - The effectiveness of the DEVELOPER SYSTEM CLEANER AND NEUTRALIZER will be greatly reduced because of the developer remaining in the recirculation lines.
  - The DEVELOPER SYSTEM CLEANER AND NEUTRALIZER remaining in the recirculation lines will contaminate the new developer when the PROCESSOR is returned to operation.

[7] Clean the DEVELOPER RACK and the DEVELOPER TANK with *Kodak* DEVELOPER SYSTEM CLEANER AND NEUTRALIZER, CAT No. 843 4615.

[8] Clean the FIXER RACK, the WASH RACK, and the FIXER TANK with *Kodak* FIXER/WASH SYSTEM CLEANER, CAT No. 139 5110.

[9] Clean the WASH TANK with *Kodak* FIXER/WASH SYSTEM CLEANER or, if biological growth exists, with a 10% solution of chlorine bleach.

[10] If necessary, clean the LEVEL SENSOR PROBES with the correct SYSTEM CLEANER.

[11] Rinse the following parts with warm water, 44[degree]C (110[degree]F) or less. Wipe the ROLLERS and the GUIDE SHOES with a soft, synthetic sponge.

a. CROSSOVERS

b. EVAPORATION COVERS

Important

To clean the CROSSOVER TROUGHS, apply DEVELOPER SYSTEM CLEANER AND NEUTRALIZER on the DEVELOPER/FIXER CROSSOVER and FIXER/WASH SYSTEM CLEANER on the FIXER/WASH CROSSOVER.

[12] Remove and clean the CROSSOVER TROUGHS. Check that the holes in the CROSSOVER TROUGHS are free of biological growth or other obstructions.

[13] Install the CROSSOVER TROUGHS.

[14] On all RACKS, check that:

a. all ROLLERS rotate freely

b. ROLLERS are clean and smooth

c. GEARS do not have excessive wear

d. BEARINGS do not have excessive wear

e. SPRINGS are not broken, missing, or corroded

[15] If necessary, install new parts.

[16] Check the RACKS for squareness. If necessary, see the procedure in the Adjustments and Replacements, Publication Part No. 5B6340.

[17] Check that the SLOTS in the AIR TUBES are clean. If necessary, do the additional steps below.

a. Remove the BAFFLES from the AIR TUBES.

b. Rinse the BAFFLES with water.

c. Clean the AIR TUBES with a bottle brush and rinse with water.

[18] Wipe above and below the ENTRANCE SLOT on the 6000 FILM ACCULMULATOR BOARD with a damp, synthetic sponge.

[19] Wipe any chemical deposits from the processing section of the PROCESSOR.

[20] Install a new DEVELOPER FILTER. If necessary, see the procedure in the Adjustments and Replacements, Publication Part No. 5B6340.

[21] Allow the DETECTOR CROSSOVER to air dry before you install it in the PROCESSOR.

[22] Clean the YOKE. Check that the holes in the YOKE are free of biological growth and other obstructions.

Important

When you install the parts in the following step, check that each part seats firmly.

[23] Install:

a. RACKS

b. CROSSOVERS

c. YOKE QUICK DISCONNECT and YOKE

d. EVAPORATION COVERS

e. TOP COVER

[24] Clean the REPLENISHMENT STRAINERS located between the REPLENISHMENT TANKS and the REPLENISHMENT PUMPS.

[25] Check the water supply FILTER. If necessary, change the FILTER.

Caution

- Any obstruction such as biological growth, small bends, or an upward sloping WASH DRAIN HOSE can cause wash water to return to the WASH TANK causing an overflow of water and damage to the ELECTRICAL BOX or COMPONENT PLATE.
- Concentrations of chlorine bleach higher than 10% or allowing the chlorine bleach to remain in the PROCESSOR for longer than 30 minutes can cause damage to the PROCESSOR.

[26] Check the WASH DRAIN for biological growth, small bends, or other obstructions. To remove biological growth do the steps below:

a. Fill the WASH TANK and DRAIN with a 10% solution of chlorine bleach.

b. Wait a **minimum of 20 minutes and a maximum of 30 minutes.**

c. Drain the chlorine bleach solution and rinse the TANK and DRAIN thoroughly with water before you return the PROCESSOR to normal use.

Warning

- Drains must be made of chemically resistant, non-corrosive material. Use PVC or the equivalent.
- The drain must have a minimum diameter of 7.6 cm (3 in.) and be free of obstruction.
- Drain service must comply with all local codes.

[27] Correctly route the WASH DRAIN HOSE down toward the WASH DRAIN. If necessary, install new 3/4 x 60 in. formed tubing, Part No. 264986.

[28] Check the DRIVE CHAIN.

(a) If the DRIVE CHAIN is dry, apply lubricant to the DRIVE CHAIN. Use NLG1 - No. 2 LITHIUM BALL and ROLLER BEARING GREASE TL-2324.

(b) If the DRIVE CHAIN is rusty, remove it and install a new DRIVE CHAIN.

(c) Adjust the tension of the DRIVE CHAIN. If necessary, see the procedure in the Adjustments and Replacements, Publication Part No. 5B6340.

[29] Check the operation of the DETECTOR SWITCHES. If necessary, adjust the DETECTOR SWITCHES. See the procedures in the Adjustments and Replacements Manual, Publication Part No. 5B6340.

[30] Close the DRAIN VALVES and fill the processing TANKS with processing solutions and starter where necessary. See the Operator Manual, Publication Part No. 5B6729, for filling instructions.

[31] Energize the PROCESSOR.

[32] Process a test film and check the PROCESSOR for correct operation.

[33] Check the negative pressure at the EXHAUST VENT for the DRYER. See the Installation Instructions, Publication Part No. 5B6339.

Note

An AUXILIARY VENTILATION FAN KIT is available for sites that do not meet exhaust requirements.

[34] Calibrate the REPLENISHMENT PUMPS. See the section “Calibrating the Replenishment System” in the Operator Manual, Publication Part No. 5B6729.

Section 4: Preventive Maintenance Schedule

Part or Assembly	Weekly*	Monthly†	3-Month Schedule‡
DETECTOR CROSSOVER	C		
DEVELOPER/FIXER CROSSOVER	C		
FIXER/WASH CROSSOVER	C		
WASH RACK	C		C(2)
DEVELOPER RACK		I,C	C(1)
FIXER RACK		I,C	C(2)
SQUEEGEE ASSEMBLY		I,C	
DRYER ROLLERS		I,C	
RACK BEARINGS, CHAINS, and DRIVE GEARS		I	
Squareness of RACKS		I	
DRYER AIR TUBES		I,C	
DEVELOPER FILTER		R	
REPLENISHMENT STRAINERS and FILTERS		C,R	
Water Supply FILTER		R	
DRAIN HOSES		I,R	
6000 CIRCUIT BOARD HOUSING	C(3)	C(3)	
6000 CIRCUIT BOARD		I	
Ventilation Exhaust			T
DRIVE MOTOR CHAIN			I,L
LEVEL SENSOR PROBES			C
DEVELOPER PROCESSOR TANK			C(1)
FIXER and WASH PROCESSOR TANK			C(2)
Calibration of the REPLENISHMENT PUMPS			T
DETECTOR SWITCHES			T
YOKE		C	C

I	=	Inspect for condition and adjust or install new parts, if necessary.
L	=	Lubricate with recommended material.
R	=	Replace, if necessary.
T	=	Test and adjust, if necessary.

C	=	Rinse and clean carefully and completely using warm water and a soft synthetic sponge.
C(1)	=	Clean with *Kodak* DEVELOPER SYSTEM CLEANER AND NEUTRALIZER.
C(2)	=	Clean with *Kodak* FIXER/WASH SYSTEM CLEANER.
C(3)	=	Clean with a damp, synthetic sponge.

* The weekly preventive maintenance procedures can be performed by either the operator of the PROCESSOR or by the trained service provider.

† Completion of the monthly preventive maintenance procedures is recommended to ensure the optimum reliability of the PROCESSOR.

‡ The 3-month schedule is a guideline for sites adhering to the site specifications issued by Kodak. Actual usage and site characteristics may require shorter intervals between maintenance.

Section 5: Publication History

Print Date	Pub. No.	ECO No.	Affected Pages	File Name	Notes
October 1995	5B6747	2649-029	All	pm3425_1_029.doc	First printing.
January 1996	5B6747	2649-062	Covers	pm3425_1_062.doc	Graphic Unification.
January 1998	5B6747	2649-062	All	pm342500.fm	First CD-ROM printing. Content is identical to January 1996 version; formatting may vary from print version.

Kodak and *X-Omat* are trademarks.

pm342500.fm

Printed In USA

HEALTH IMAGING

EASTMAN KODAK COMPANY ● ROCHESTER, N.Y. 14650