Section 3: Racks and Crossovers

Table of Contents

Description	Page
Racks and Crossovers	3-1
Detector Crossover	3-2
Developer Rack Assembly	3-4
Developer Rack - Top Exit Rollers	3-6
Developer Rack - Other Rollers	3-8
Developer Rack - Turnaround Rollers	3-10
Developer/Fixer Crossover	3-12
Fixer Rack Assembly	3-14
Fixer Rack - Top Exit Rollers	3-16
Fixer Rack - Other Rollers	3-18
Fixer Rack - Turnaround Rollers	3-20
Fixer/Wash Crossover	3-22
Wash Rack Assembly	3-24
Wash Rack - Squeegee Rollers	3-26
Wash Rack - Other Rollers	3-28
Wash Rack - Turnaround Rollers	3-30
Squeegee Assembly	3-32
Squeegee Assembly - Drive Side	3-34
Squeegee Assembly - Nondrive Side	3-36

Figure 3–1 Detector Crossover

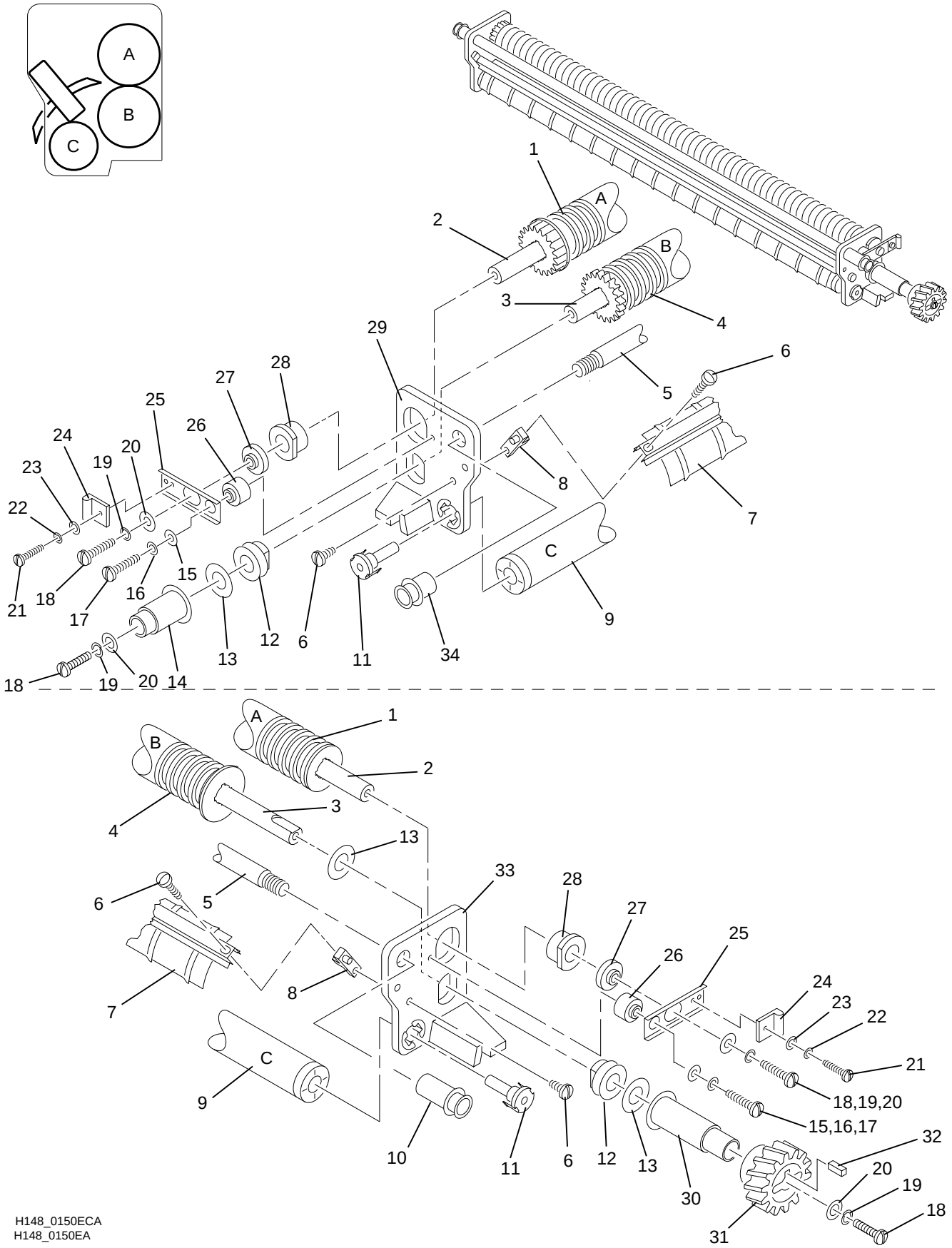

Figure 3–1

Item	Part No.	Description	Qty.	Notes
	1C7377	Detector Crossover Assembly		
1	490109	Roller - Black Rubber	1	A. Driven.
2	458175	Shaft	1	
3	458235	Shaft	1	
4	490108	Roller - Black Rubber	1	B. Drive.
5	458170	Rod - Tie	1	
6	5B6316	Screw	4	
7	458953	Shoe - Guide, Crossover	1	
8	594233	Bracket - Guide Shoe	2	
9	1C7552	Roller - Black Plastic	1	C. Idler.
10	472756	Nut - Tie Rod, Long	1	
11	562228	Stud	2	
12	1C4395	Bearing	2	
13	418775	Washer	2	
14	458236	Spacer - Sleeve	1	
15	165627	Washer	2	
16	853096	Washer - Lock	2	
17	544194	Screw	2	
18	852682	Screw	4	
19	853087	Washer - Lock	4	
20	852611	Washer	4	
21	575821	Screw	2	
22	187283	Washer - Lock	2	
23	575822	Washer	2	
24	650876	Actuator - Magnet	2	
25	474180	Support	2	
26	489997	Standoff - Pivot	2	
27	5B6527	Bearing - Rocker	2	
28	650707	Bearing	2	
29	5B6549	Sideplate - Detector Crossover, Nondrive	1	
30	458174	Spacer - Sleeve	1	
31	550781	Gear - Drive	1	
32	452044	Key	1	
33	5B6548	Sideplate - Detector Crossover, Drive	1	
34	472755	Nut - Tie Rod, Short	1	

Note

Quantities are for the entire Crossover.

Figure 3–2 Developer Rack Assembly

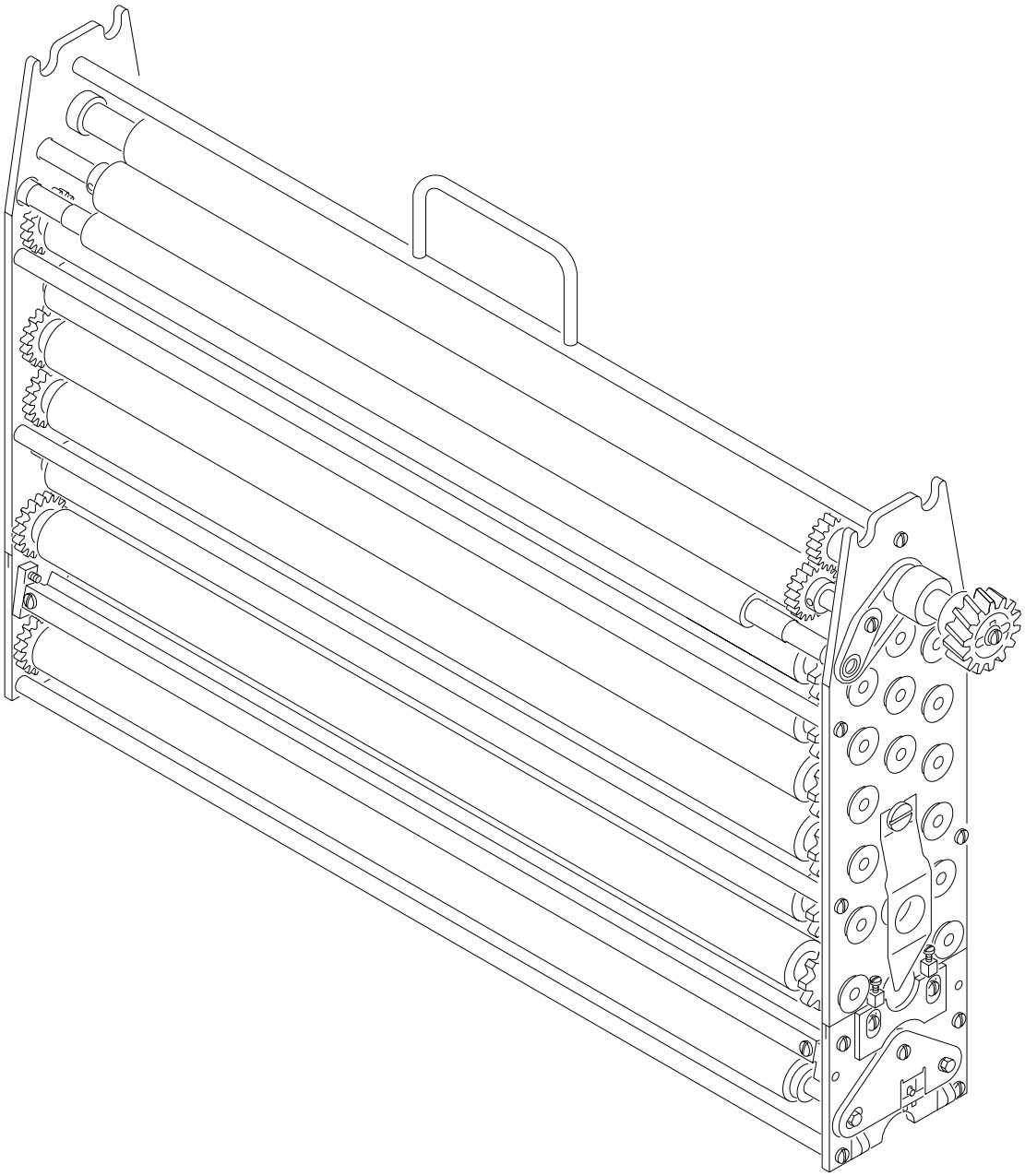

Figure 3–2

Item	Part No.	Description	Notes
	8B7293	Developer Rack Assembly	

Figure 3–3 Developer Rack - Top Exit Rollers

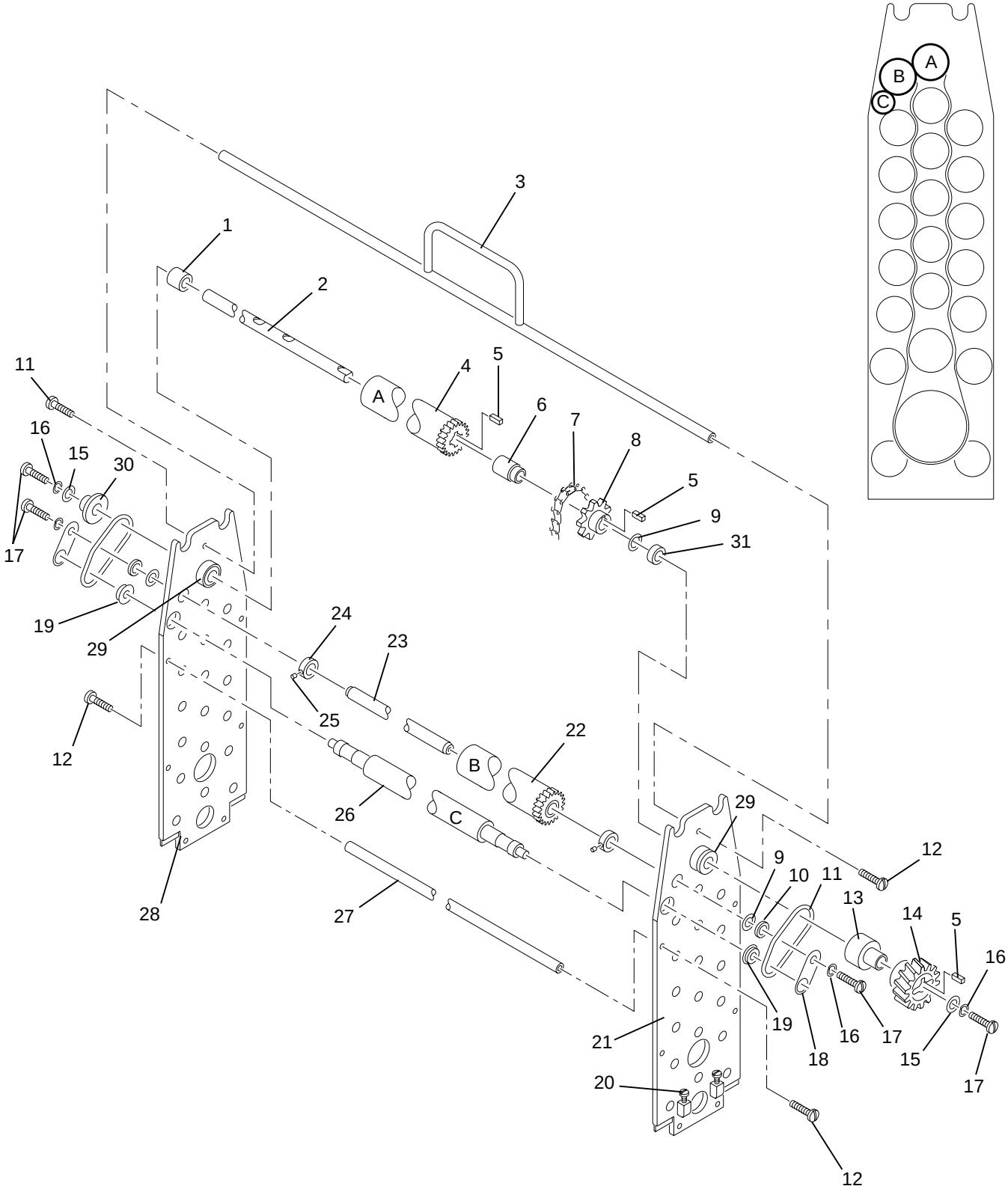

H148_0202ECA
H148_0202EA

Figure 3–3

Item	Part No.	Description	Qty.	Notes
1	473539	Spacer	1	
2	559787	Shaft	1	
3	459378	Handle	1	
4	5B6406	Roller - Stainless Steel	1	A. New Roller. Use only with new Item 22.
	470086	Roller - Black Rubber	1	A. Old Roller. Use only with old Item 22.
5	454354	Key	3	
6	459355	Spacer	1	
7	459263	Chain	1	
8	454285	Sprocket	1	
9	463100	Washer - Thrust	9	
10	463004	Spacer	8	
11	467843	Spring	2	
12	852807	Screw	14	
13	473538	Spacer	1	
14	550774	Gear	1	
15	852611	Washer	2	
16	853087	Washer - Lock	5	
17	852682	Screw	8	
18	473221	Plate - Keeper	2	
19	473220	Bushing	2	
20	183624	Screw	4	
21	286907	Sideplate - Rack, Drive	1	Includes Item 20.
22	5B6407	Roller - Black Rubber	1	B. New Roller.
	467015	Roller - Stainless Steel	1	B. Old Roller. Includes a Gear and 2 Bearings.
23	458207	Shaft	4	
24	459347	Collar	2	
25	852889	Setscrew	2	
26	474599	Roller - Black Rubber	1	C.
27	458219	Rod - Tie	6	
28	286904	Sideplate - Rack, Nondrive	1	Includes Item 20.
29	650702	Bearing	6	
30	458205	Spacer	1	
31	5B6775	Spacer	1	Only needed with the new stainless steel Roller A 5B6406.

Note
Quantities are for the entire Rack.

Figure 3–4 Developer Rack - Other Rollers

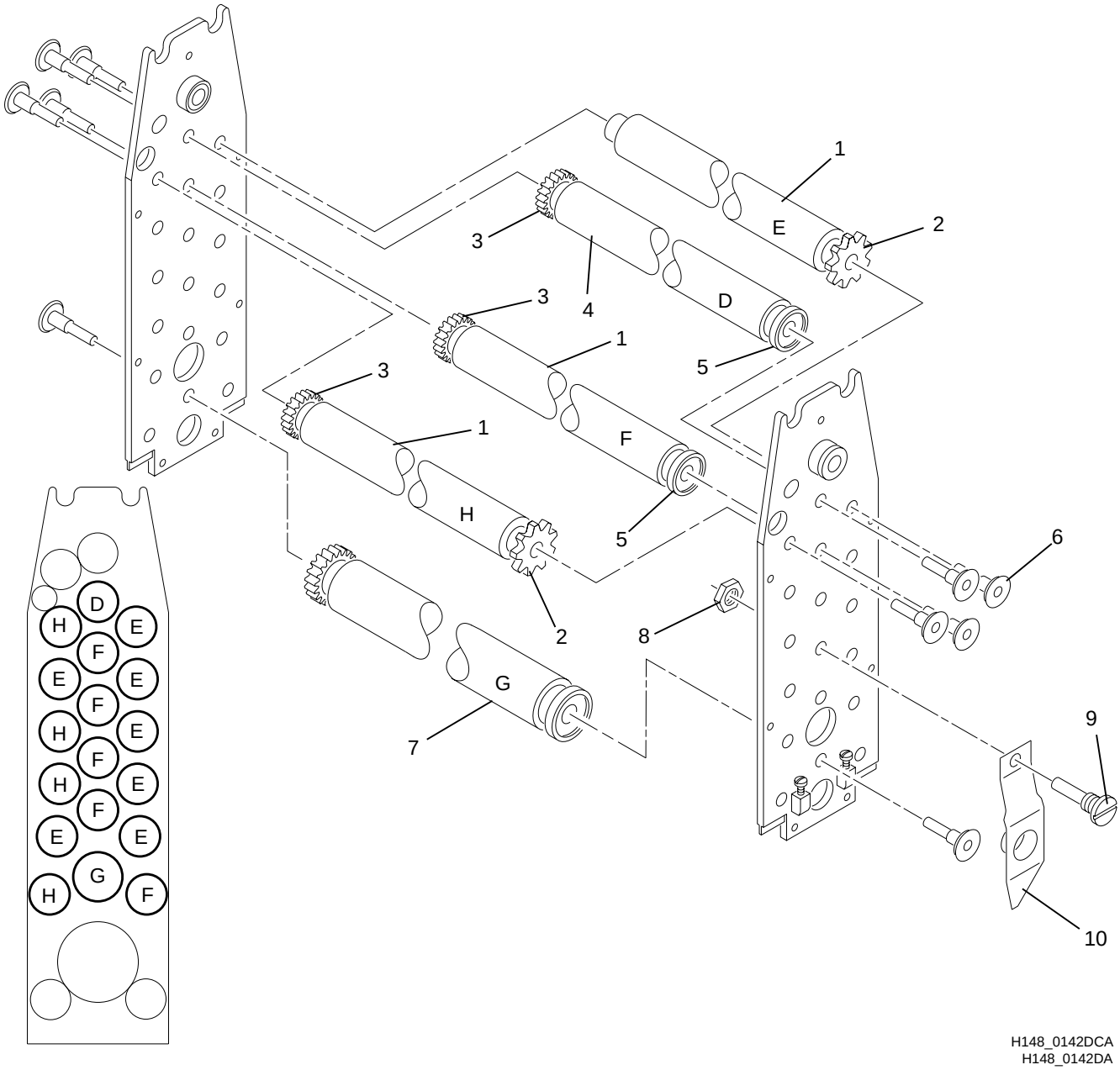

Figure 3–4

Item	Part No.	Description	Qty.	Notes
1	1C7381	Roller - Black Plastic	16	E, F, and H.
2	607833	Sprocket	11	
3	467564	Gear	10	
4	5B6058	Roller - Stainless Steel	1	D.
5	539198	Idler	6	
6	474777	Stud	35	
7	1C7386	Roller - Black Plastic	1	G. Includes the Gear and Idler.
8	452101	Nut	1	
9	470507	Stud - Baffle	1	
10	261414	Baffle - Developer	1	

Note

Quantities are for the entire Rack.

Figure 3–5 Developer Rack - Turnaround Rollers

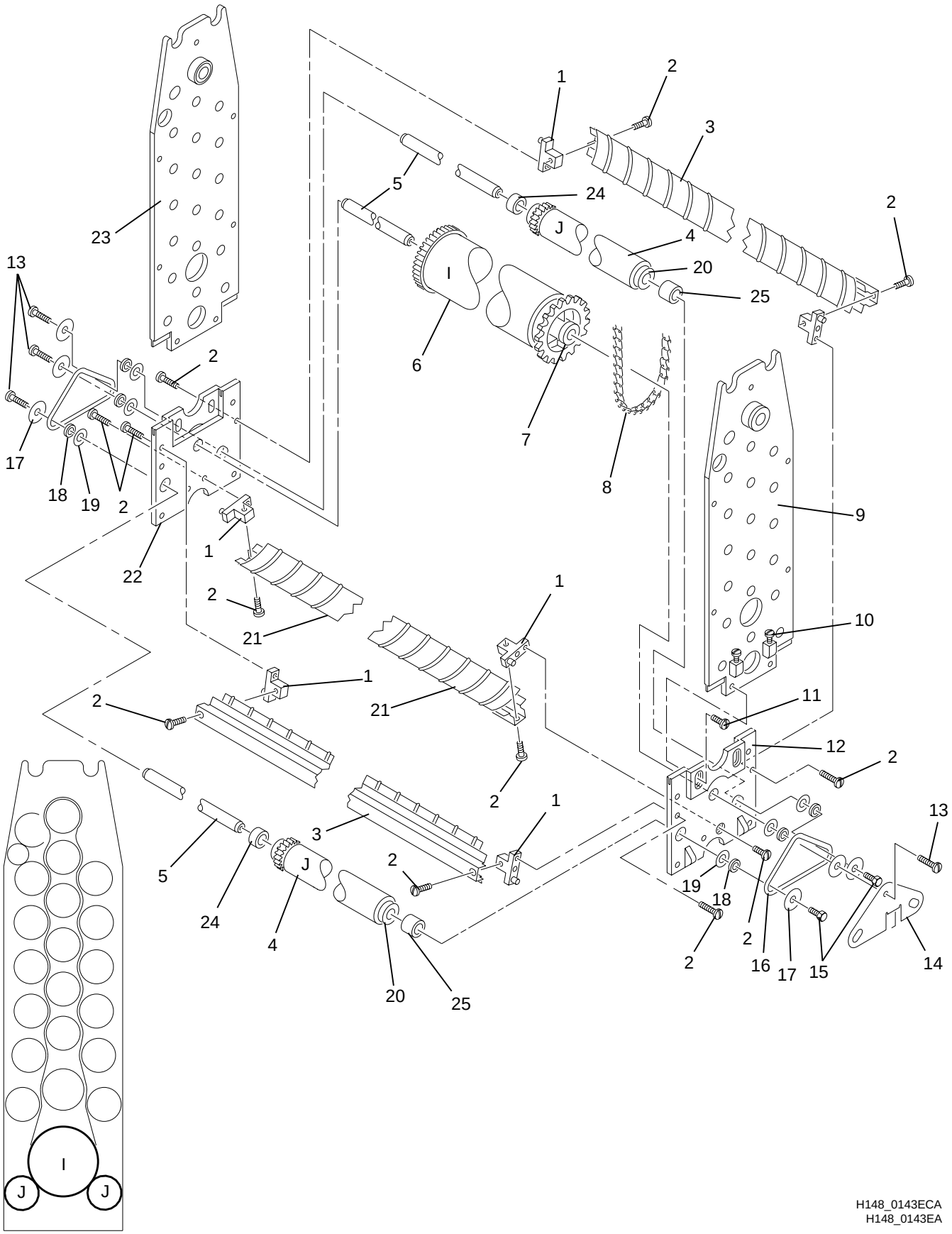

Figure 3–5

Item	Part No.	Description	Qty.	Notes
1	474596	Bracket - Guide Shoe	6	
2	5B6316	Screw	12	
3	458228	Shoe - Guide	2	Side.
4	1C7384	Roller - Black Plastic	2	J. Includes Item 20.
5	458207	Shaft	3	
6	536884	Roller - Black Rubber, 2-in.	1	I.
7	650702	Bearing	4	
8	459263	Chain	1	
9	286907	Sideplate - Rack, Drive	1	Includes Item 10.
10	183624	Screw	4	
11	490096	Screw	4	
12	477001	Sideplate - Turnaround, Drive	1	
13	852682	Screw	8	
14	1C7988	Plate - Locking	1	
15	190596	Screw	2	
16	474645	Spring	2	
17	459343	Washer	6	
18	463004	Spacer	8	
19	463100	Washer - Thrust	9	
20	650711	Bearing	4	
21	562765	Shoe - Guide	1	Bottom.
22	477000	Sideplate - Turnaround, Nondrive	1	
	458219	Rod - Tie	6	Not shown.
	852807	Screw	14	Not shown.
23	286904	Sideplate - Rack, Nondrive	1	Includes Item 10.
24	473434	Spacer	2	
25	459346	Spacer	2	

Note
Quantities are for the entire Rack.

Figure 3–6 Developer/Fixer Crossover

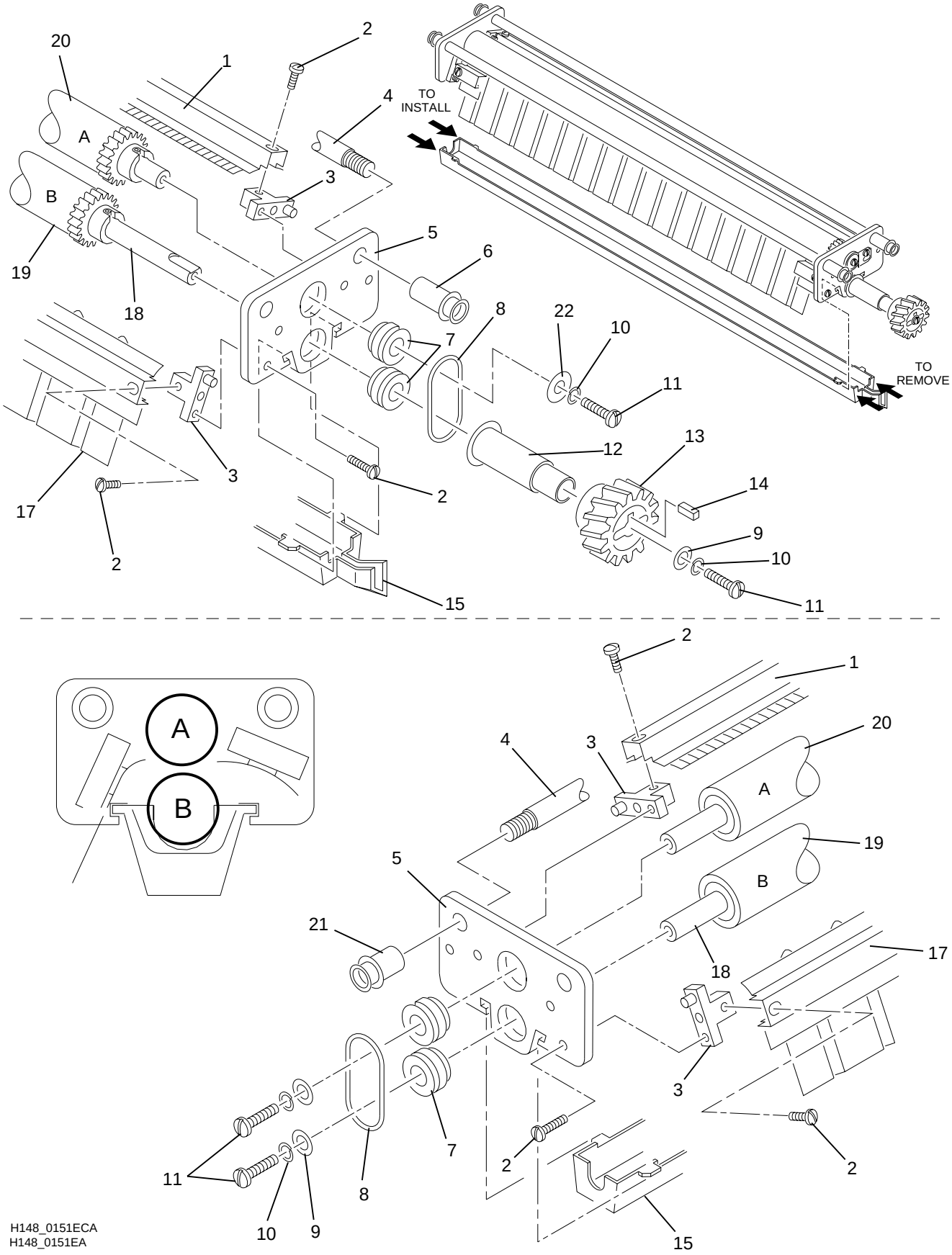

Figure 3–6

Item	Part No.	Description	Qty.	Notes
	8B6965	Developer/Fixer Crossover Assembly		Includes all the items on this page.
1	5B6412	Shoe - Guide, Crossover	1	
2	5B6316	Screw	8	
3	474596	Bracket - Guide Shoe	4	
4	458170	Rod - Tie	2	
5	8B7282	Sideplate - Crossover	2	
6	472756	Nut - Tie Rod, Long	2	
7	914507	Bearing	4	
8	459344	Spring	2	
9	852611	Washer	3	
10	853087	Washer - Lock	4	
11	852682	Screw	4	
12	458174	Spacer - Sleeve	1	
13	943712	Gear	1	
14	452044	Key	1	
15	914521	Trough - Wash	1	
17	458953	Shoe - Guide, Crossover	1	
18	914482	Shaft	1	
19	470085	Roller - Black Rubber	1	B.
20	1C0489	Roller - White Silicone	1	A. Previously gray silicone.
21	472755	Nut - Tie Rod, Short	2	
22	459946	Washer - ID, DF	1	

Note
Quantities are for the entire Crossover.

Figure 3–7 Fixer Rack Assembly

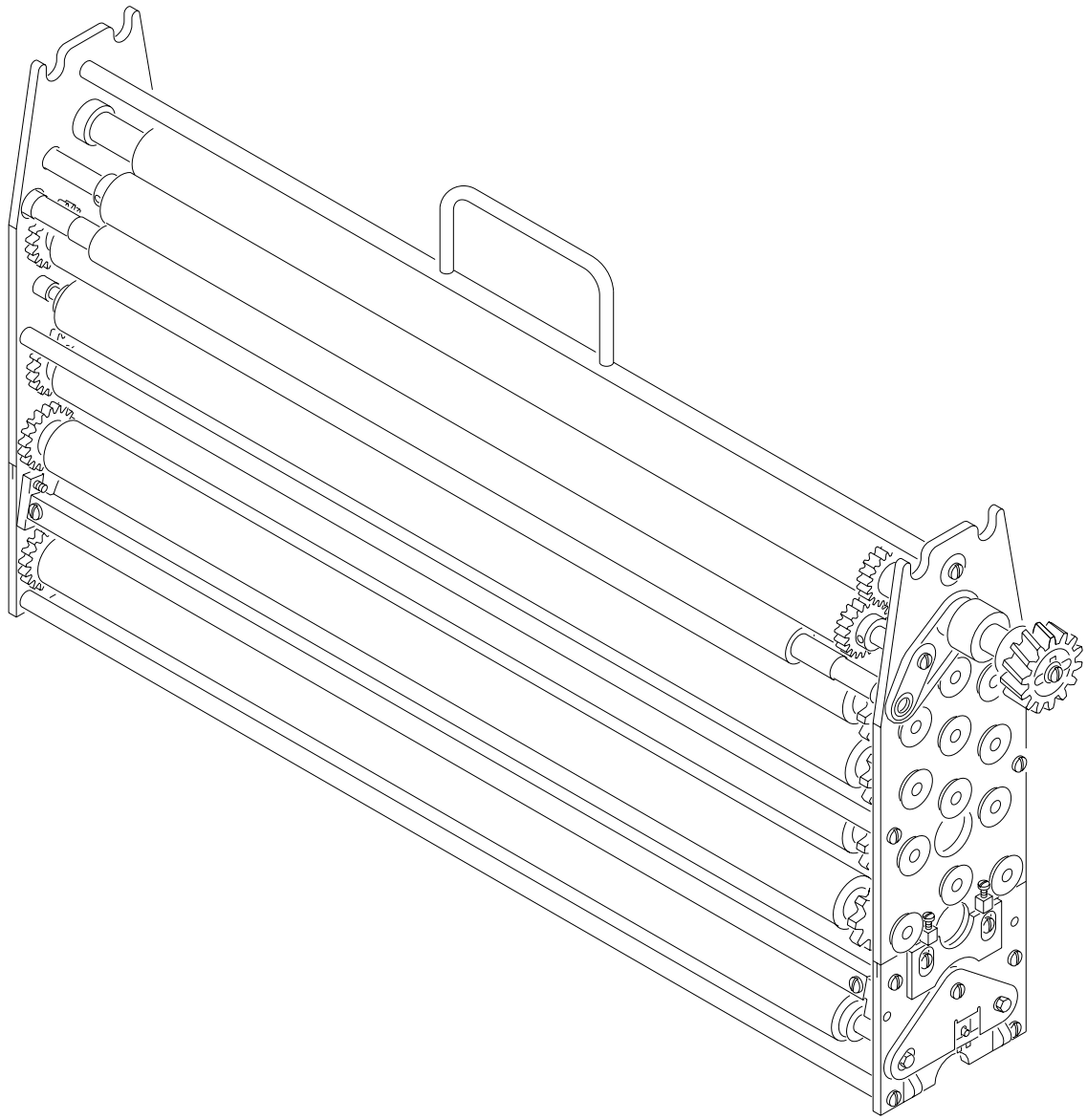

H148_0144DA

Figure 3–7

Item	Part No.	Description	Notes
	8B7294	Fixer Rack Assembly	

Figure 3–8 Fixer Rack - Top Exit Rollers

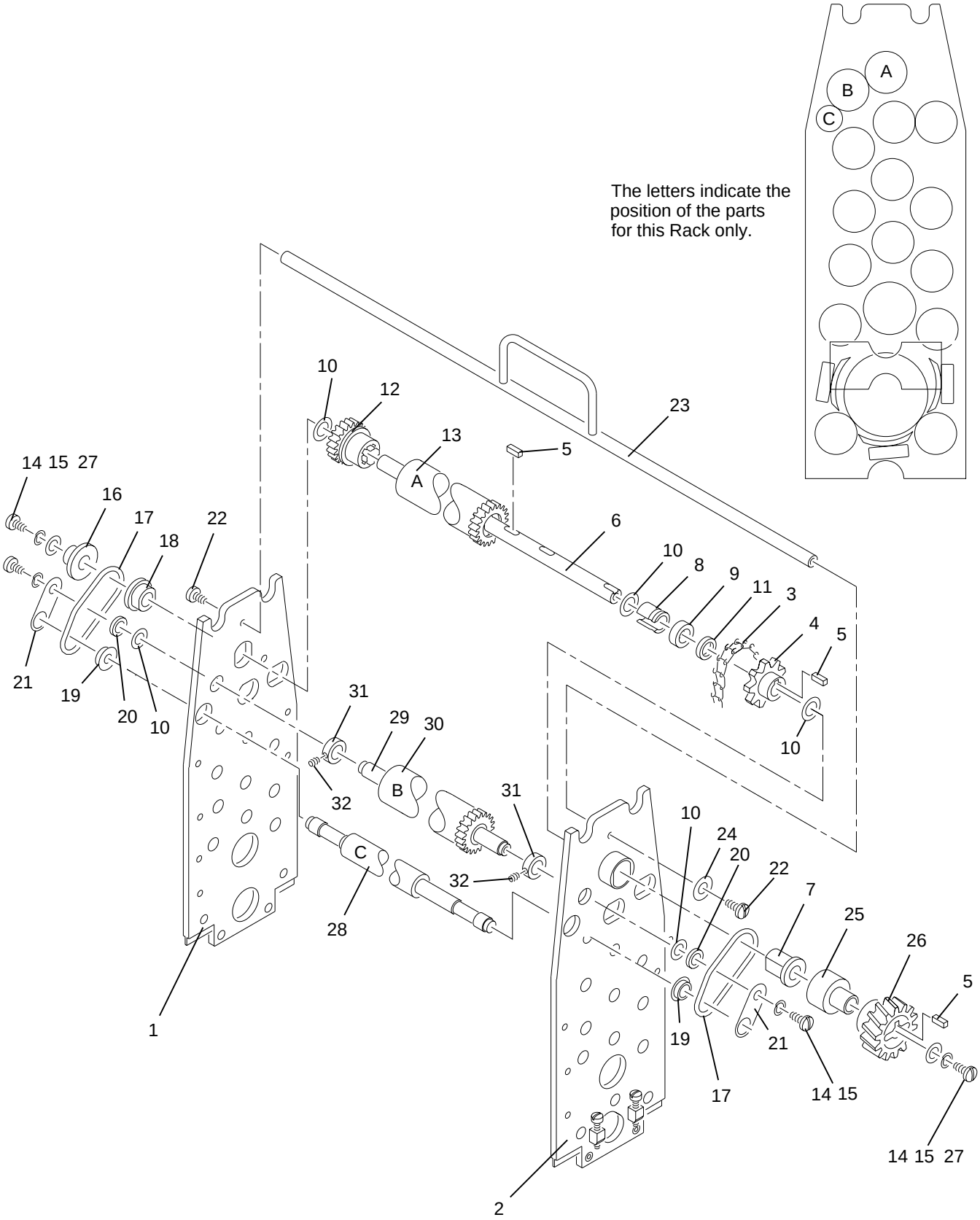

H148_0194ECA
H148_0194EA

Figure 3–8

Item	Part No.	Description	Qty.	Notes
1	5B6392	Sideplate - Fixer, Nondrive	1	
2	5B6391	Sideplate - Fixer, Drive	1	
3	462688	Chain	1	
4	454285	Sprocket	1	
5	454354	Key	3	
6	559787	Shaft	1	
7	8B7405	Bearing	1	
8	477092	Spacer	1	
9	5B6775	Spacer	2	
10	463100	Washer - Thrust	11	
11	5B6776	Spacer	1	
12	594254	Gear	1	
13	5B6406	Roller - Stainless Steel	1	A.
14	852682	Screw	20	
15	853087	Washer - Lock	17	
16	458205	Spacer	1	
17	467843	Spring	2	
18	914507	Bearing	5	
19	473220	Bushing	2	
20	463004	Spacer	8	
21	473221	Plate - Keeper	2	
22	852807	Screw	10	
23	459378	Handle	1	
24	459944	Washer - ID, Fixer	1	
25	473538	Spacer	1	
26	550774	Gear	1	
27	852611	Washer	15	
28	474599	Roller - Black Rubber	1	C.
29	458207	Shaft	6	
30	5B6407	Roller - Black Rubber	1	B.
31	459347	Collar	5	
32	852889	Setscrew	5	

Note
Quantities are for the entire Rack.

Figure 3–9 Fixer Rack - Other Rollers

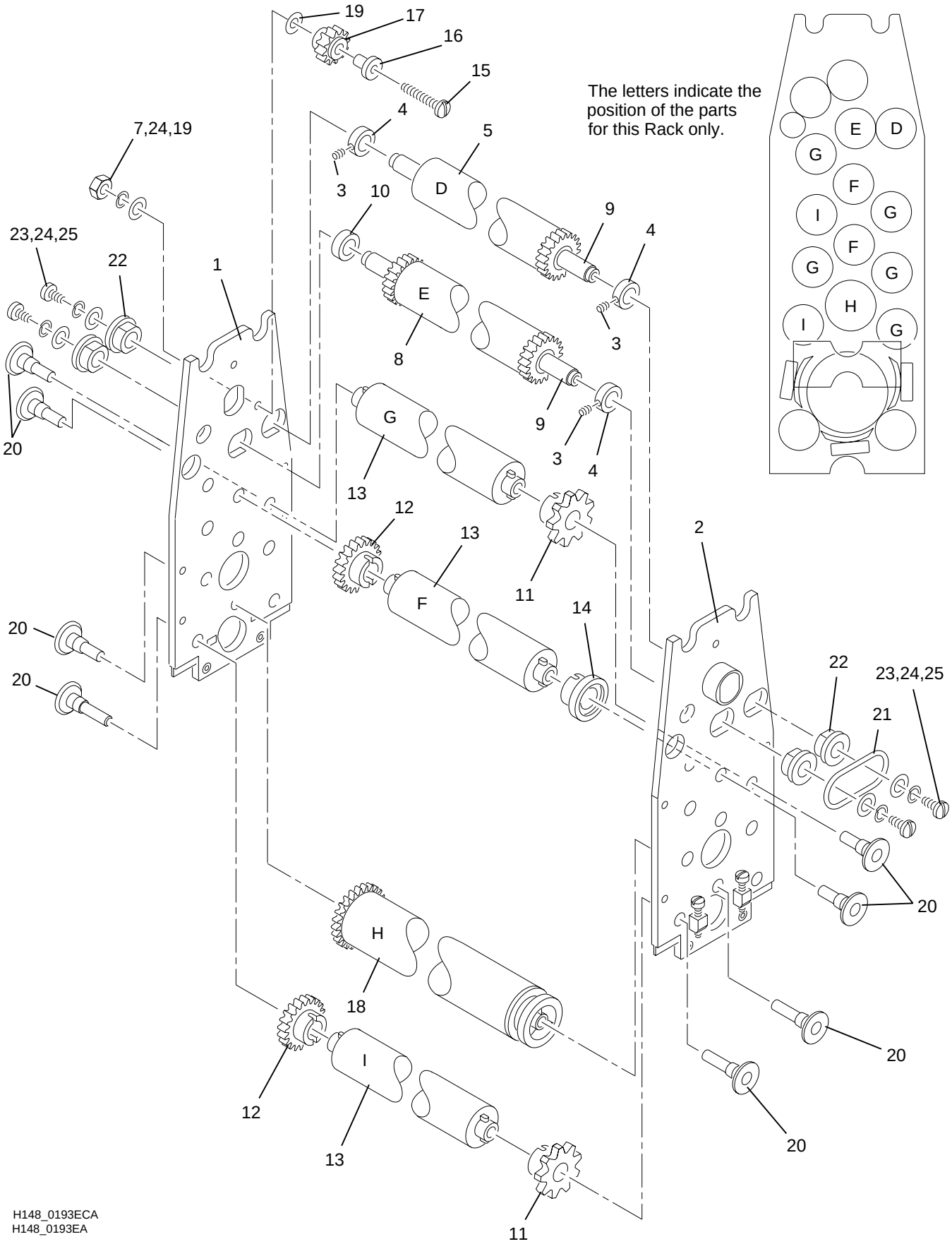

Figure 3–9

Item	Part No.	Description	Qty.	Notes
1	5B6392	Sideplate - Fixer, Nondrive	1	
2	5B6391	Sideplate - Fixer, Drive	1	
3	852889	Setscrew	5	
4	459347	Collar	5	
5	5B6413	Roller - Black Rubber	1	D.
7	853080	Nut	1	
8	5B6414	Roller - Stainless Steel	1	E.
9	458207	Shaft	6	
10	5B6775	Spacer	2	
11	607833	Sprocket	7	
12	467564	Gear	4	
13	1C7381	Roller - Black Plastic	9	F, G, and I.
14	539198	Idler	2	
15	852959	Screw	1	
16	943471	Bushing	1	
17	838999	Gear	1	
18	1C7386	Roller - Black Plastic	1	H.
19	562226	Washer	2	
20	474777	Stud	20	
21	1C7106	Spring	2	
22	914507	Bearing	5	
23	852611	Washer	15	
24	853087	Washer - Lock	17	
25	852682	Screw	20	

Note
Quantities are for the entire Rack.

Figure 3–10 Fixer Rack - Turnaround Rollers

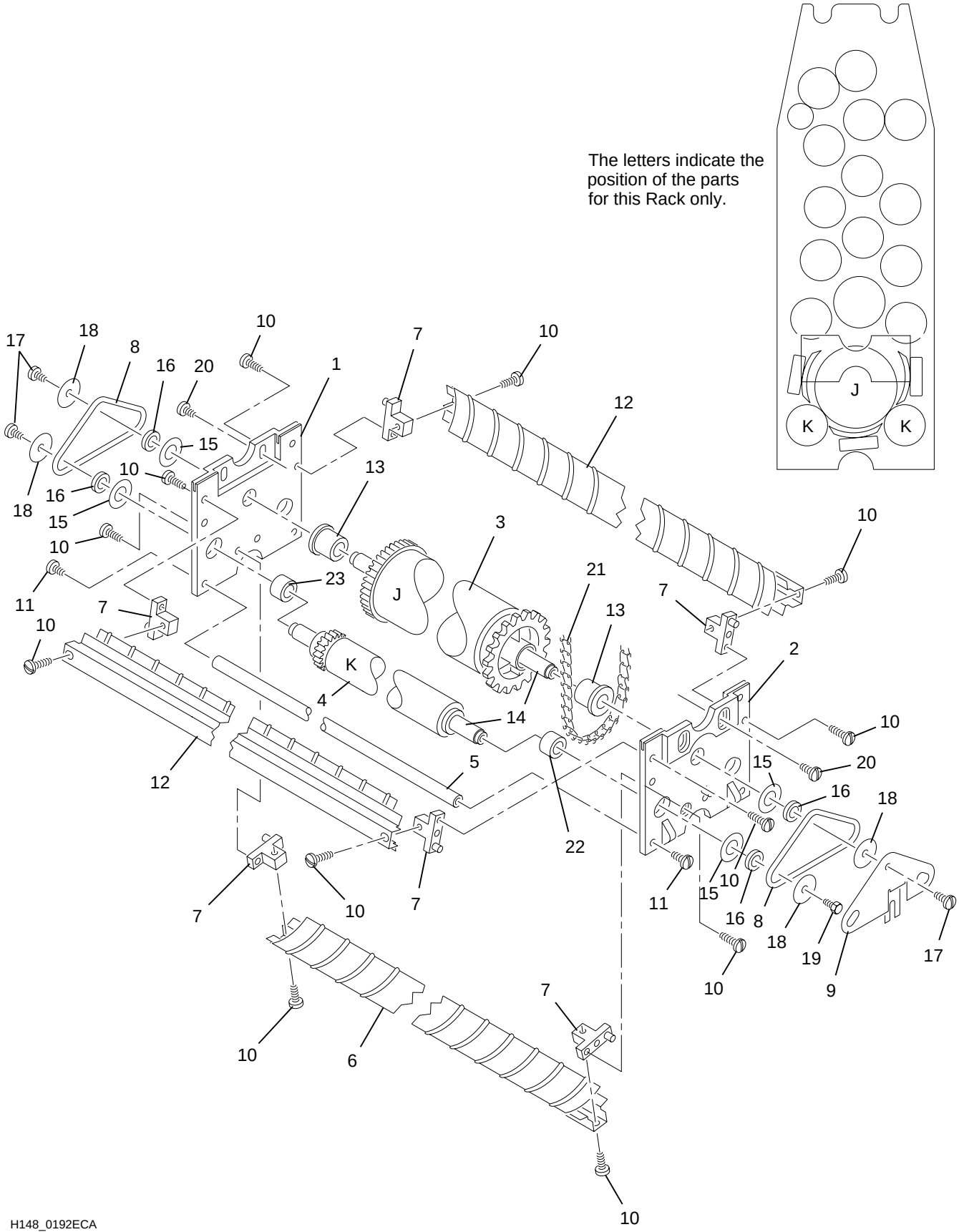

Figure 3–10

Item	Part No.	Description	Qty.	Notes
1	477000	Sideplate - Turnaround, Nondrive	1	
2	477001	Sideplate - Turnaround, Drive	1	
3	5B6076	Roller - Tan Phenolic	1	J.
4	1C7384	Roller - Black Plastic	2	K.
5	458219	Rod - Tie	4	
6	562765	Shoe - Guide	1	
7	474596	Bracket - Guide Shoe	6	
8	474645	Spring	2	
9	1C7988	Plate - Locking	1	
10	5B6316	Screw	12	
11	852807	Screw	10	
12	458228	Shoe - Guide	2	
13	650702	Bearing	2	
14	458207	Shaft	6	
15	463100	Washer - Thrust	11	
16	463004	Spacer	8	
17	852682	Screw	20	
18	459343	Washer	6	
19	190596	Screw	2	
20	490096	Screw	4	
21	462688	Chain	1	
22	459346	Spacer	2	
23	473434	Spacer	2	

Note
Quantities are for the entire Rack.

Figure 3–11 Fixer/Wash Crossover

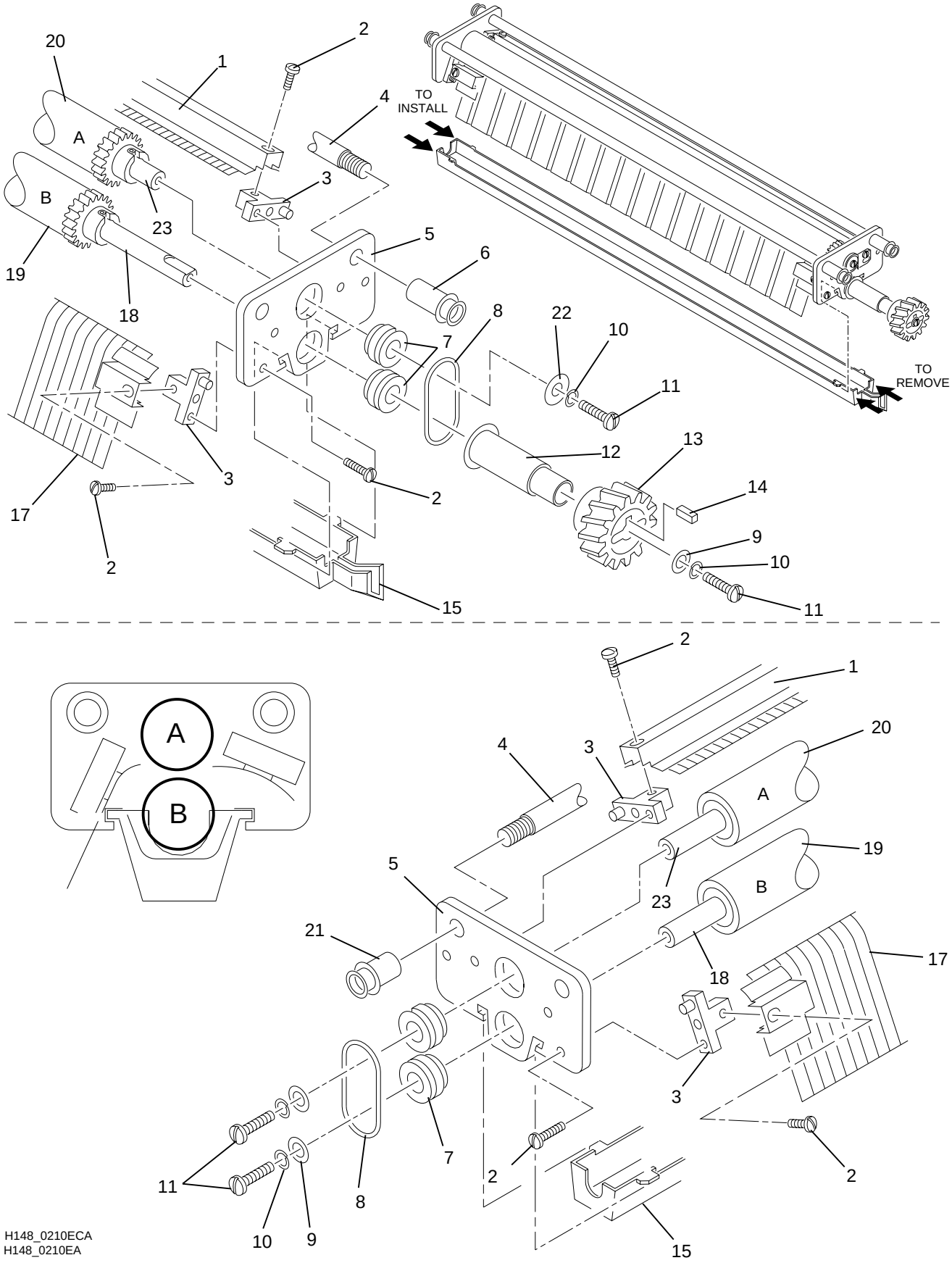

Figure 3–11

Item	Part No.	Description	Qty.	Notes
	8B6966	Fixer/Wash Crossover Assembly		Includes all the items on this page.
1	5B6412	Shoe - Guide, Crossover	1	
2	5B6316	Screw	8	
3	474596	Bracket - Guide Shoe	4	
4	458170	Rod - Tie	2	
5	911429	Sideplate - Crossover	2	
6	472756	Nut - Tie Rod, Long	2	
7	914507	Bearing	4	
8	459344	Spring	2	
9	852611	Washer	3	
10	853087	Washer - Lock	4	
11	852682	Screw	4	
12	458174	Spacer - Sleeve	1	
13	943712	Gear	1	
14	452044	Key	1	
15	914521	Trough - Wash	1	
17	8B6959	Shoe - Guide, Crossover	1	
18	914482	Shaft	1	
19	470085	Roller - Black Rubber	1	B.
20	467017	Roller - Tan Phenolic	1	A.
21	472755	Nut - Tie Rod, Short	2	
22	459947	Washer - ID, FW	1	
23	914480	Shaft	1	

Note
Quantities are for one entire Crossover.

Figure 3–12 Wash Rack Assembly

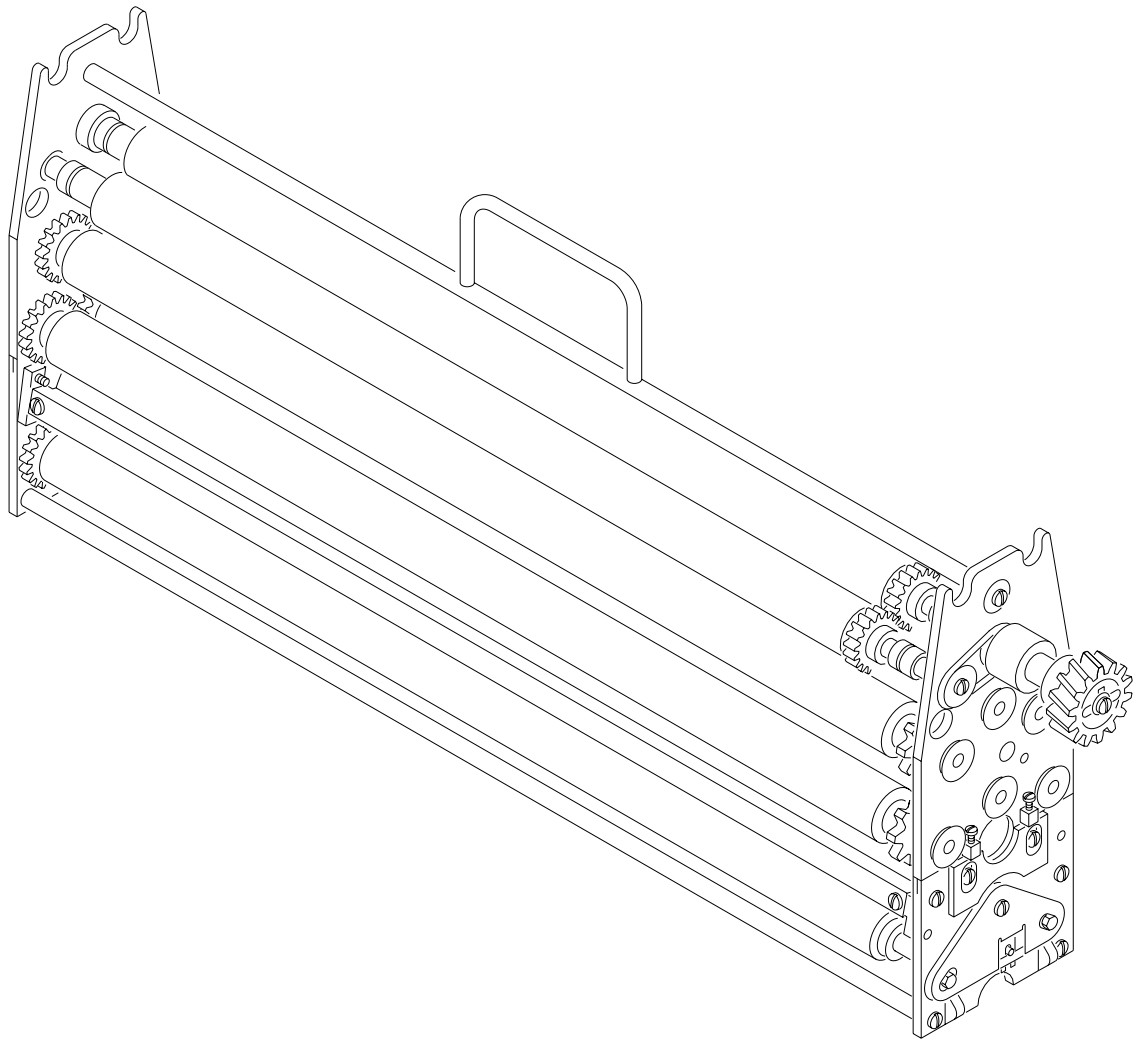

H148_0148DA

Figure 3–12

Item	Part No.	Description	Notes
	8B6969	Wash Rack Assembly	

Figure 3–13 Wash Rack - Squeegee Rollers

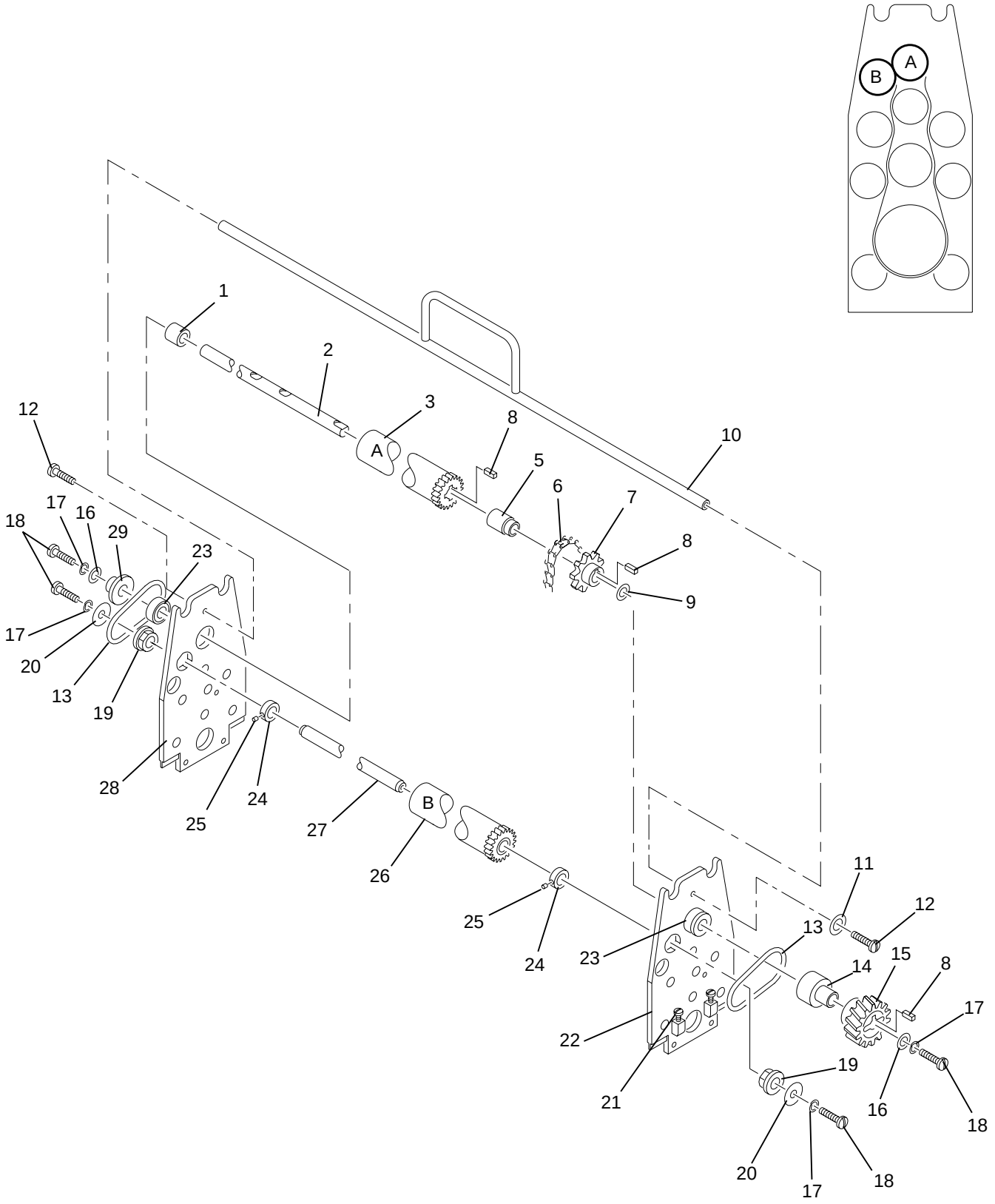

H148_0070ECA
H148_0070EA

Figure 3–13

Item	Part No.	Description	Qty.	Notes
1	473539	Spacer	1	
2	559787	Shaft	1	
3	470086	Roller - Black Rubber	1	A.
5	459355	Spacer	1	
6	458240	Chain	1	
7	454285	Sprocket	1	
8	454354	Key	3	
9	463100	Washer - Thrust	7	
10	459378	Handle	1	
11	459945	Washer - ID, Wash Rack	1	
12	852807	Screw	6	
13	1C7106	Spring	2	
14	473538	Spacer	1	
15	550774	Gear	1	
16	852611	Washer	2	
17	853087	Washer - Lock	4	
18	852682	Screw	9	
19	1C4395	Bearing	2	
20	462139	Washer	2	
21	183624	Screw	4	
22	286912	Sideplate - Wash Rack, Drive	1	Includes Item 21.
23	650702	Bearing	4	
24	459347	Collar	2	
25	852889	Setscrew	2	
26	5B6370	Roller - Tan Phenolic	1	B.
27	5B6371	Shaft	1	
28	286910	Sideplate - Wash Rack, Nondrive	1	Includes Item 21.
29	458205	Spacer	1	

Note
Quantities are for the entire Rack.

Figure 3–14 Wash Rack - Other Rollers

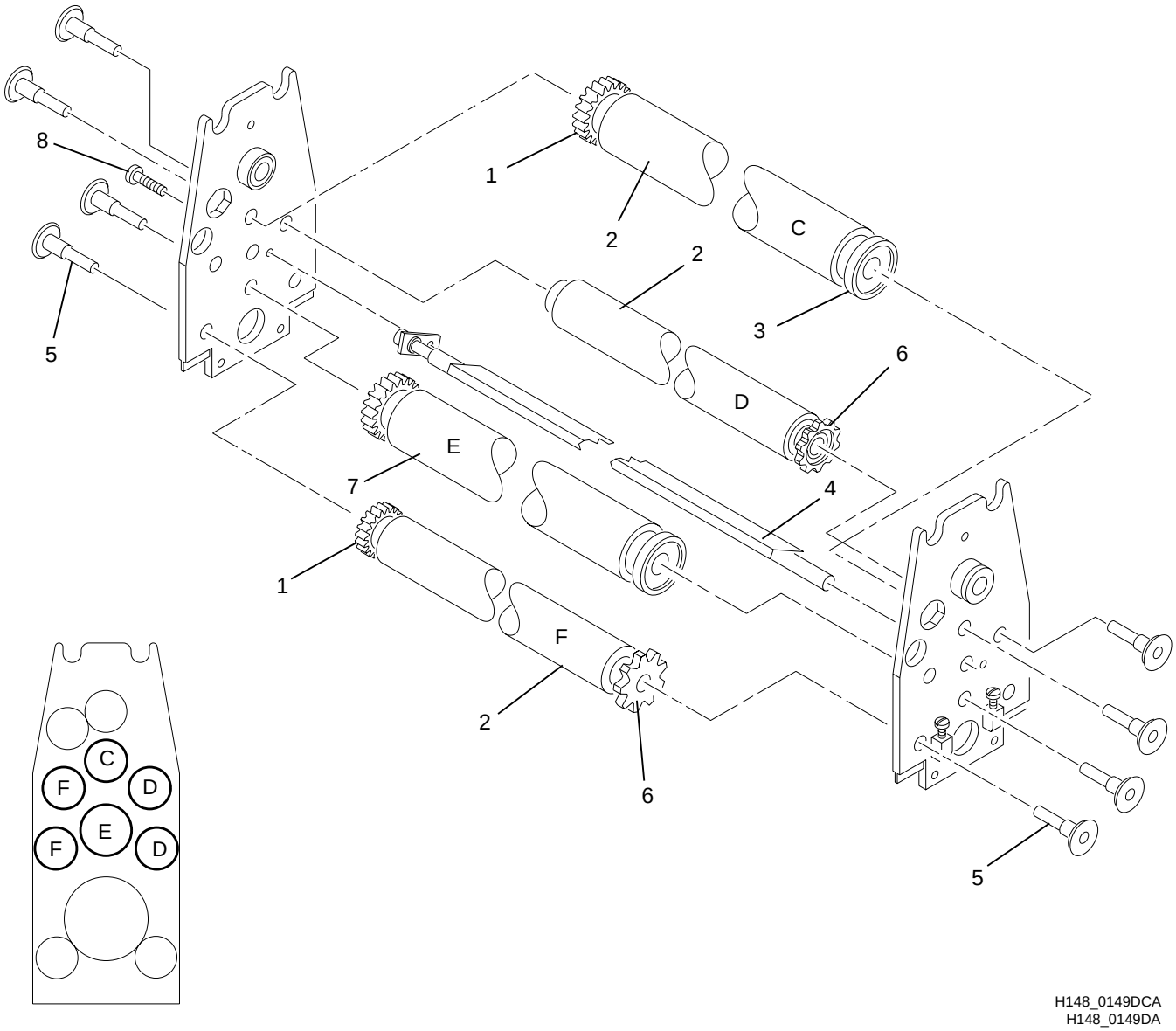

Figure 3–14

Item	Part No.	Description	Qty.	Notes
1	467564	Gear	5	
2	1C7381	Roller - Black Plastic	6	C, D, and F.
3	539198	Idler	3	
4	474472	Guide Bar Assembly	1	
5	474777	Stud	12	
6	607833	Sprocket	3	
7	1C7386	Roller - Black Plastic	1	E.
8	852682	Screw	9	

Note
Quantities are for the entire Rack.

Figure 3–15 Wash Rack - Turnaround Rollers

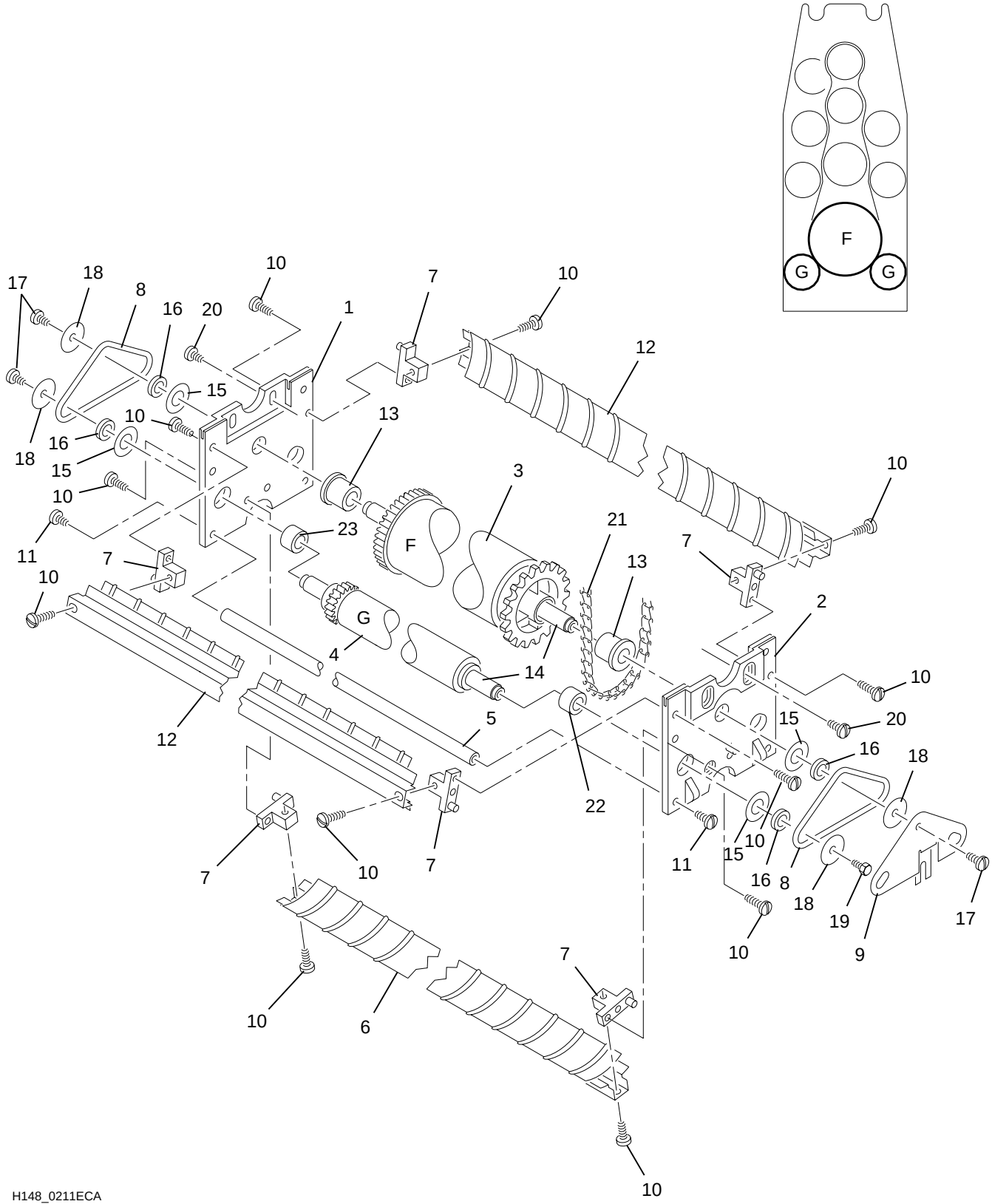

Figure 3–15

Item	Part No.	Description	Qty.	Notes
1	477000	Sideplate - Turnaround, Nondrive	1	
2	477001	Sideplate - Turnaround, Drive	1	
3	5B6076	Roller - Tan Phenolic	1	J.
4	1C7384	Roller - Black Plastic	2	K.
5	458219	Rod - Tie	2	
6	562765	Shoe - Guide	1	
7	474596	Bracket - Guide Shoe	6	
8	474645	Spring	2	
9	1C7988	Plate - Locking	1	
10	5B6316	Screw	12	
11	852807	Screw	6	
12	458228	Shoe - Guide	2	
13	650702	Bearing	4	
14	458207	Shaft	3	
15	463100	Washer - Thrust	7	
16	463004	Spacer	6	
17	852682	Screw	9	
18	459343	Washer	6	
19	190596	Screw	2	
20	490096	Screw	4	
21	458240	Chain	1	
22	459346	Spacer	2	
23	473434	Spacer	2	

Note
Quantities are for the entire Rack.

Figure 3–16 Squeegee Assembly

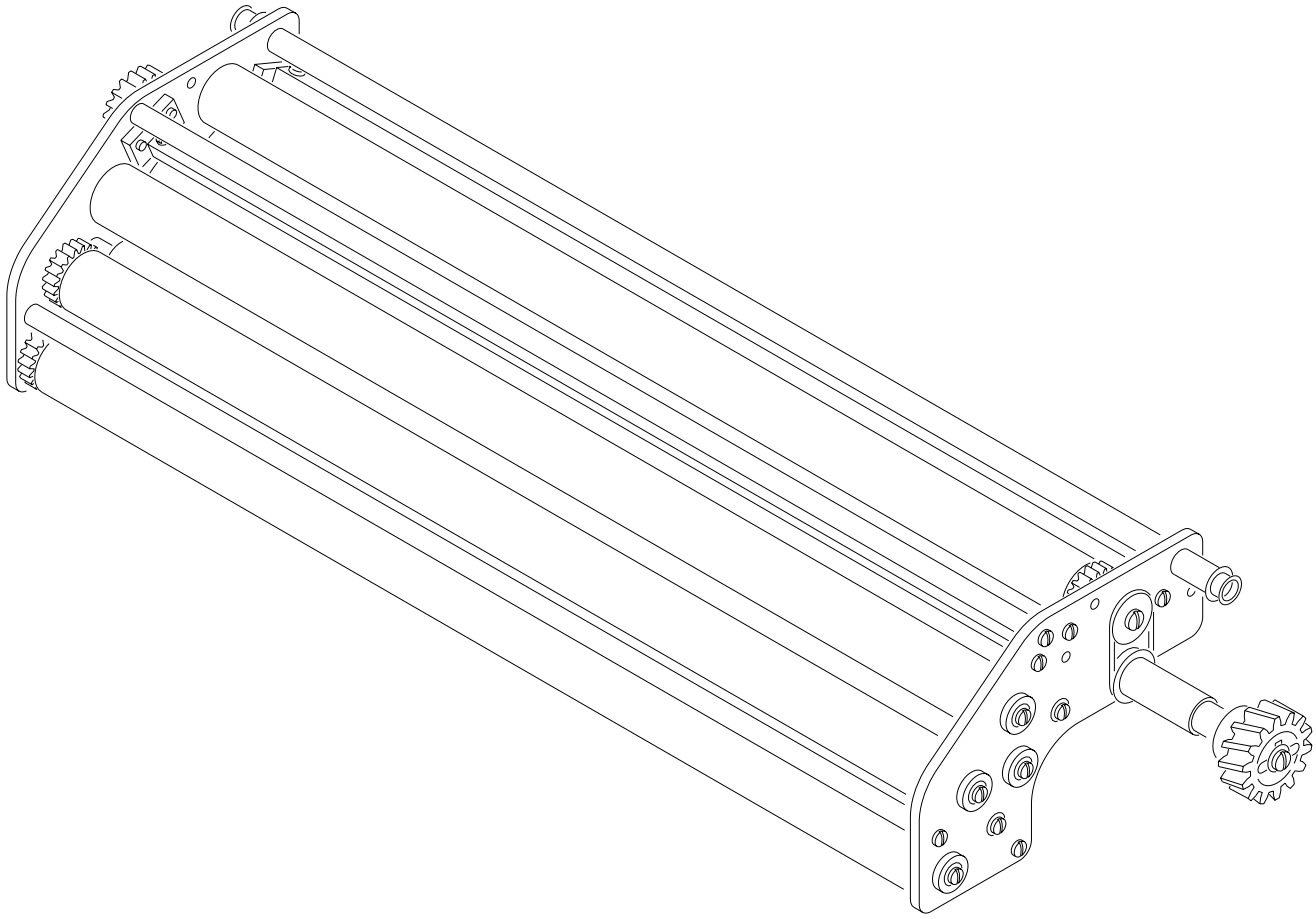

H148_0139DA

Figure 3–16

Item	Part No.	Description	Notes
	8B6970	Squeegee Assembly	

Figure 3–17 Squeegee Assembly - Drive Side

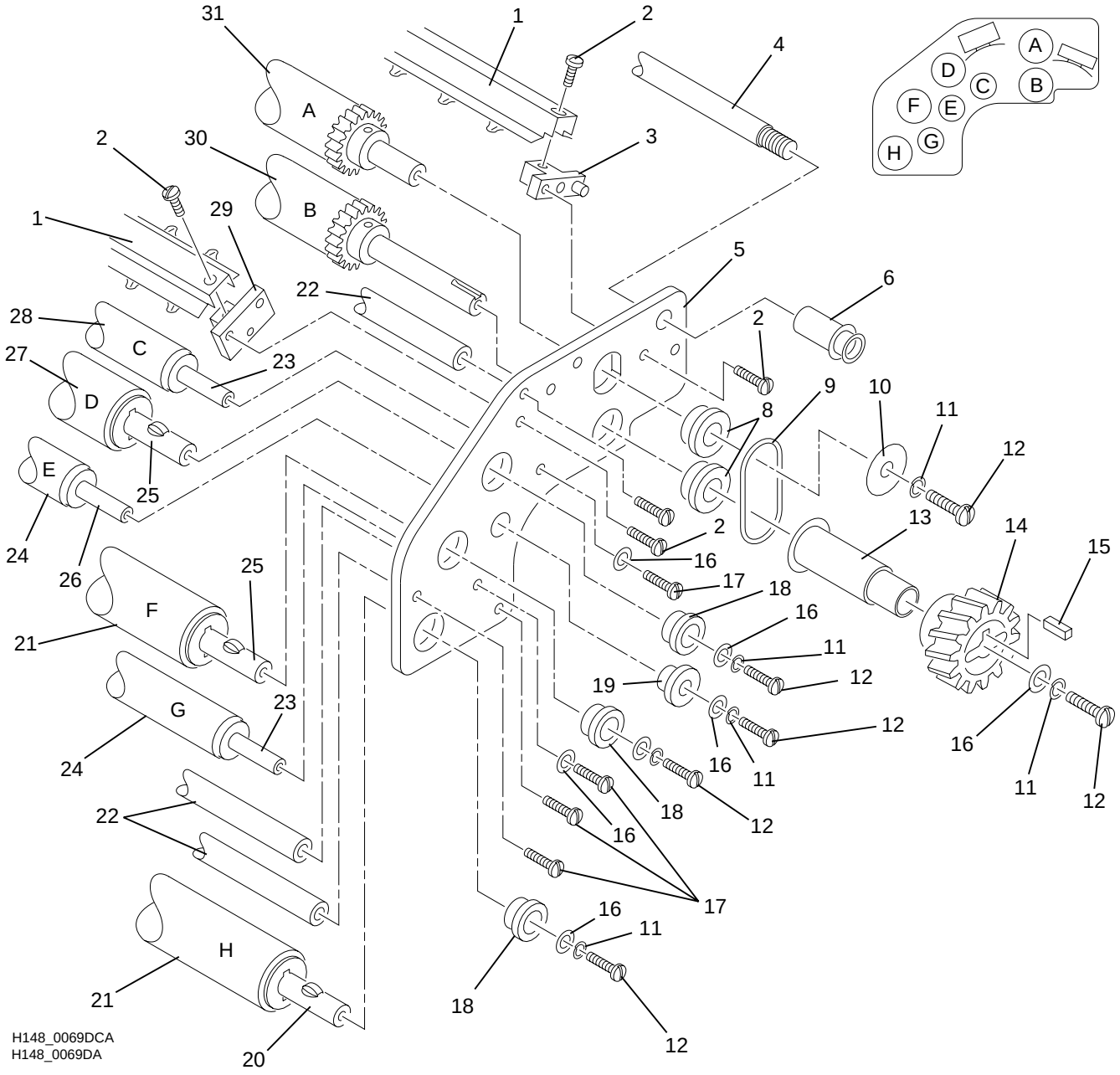

Figure 3–17

Item	Part No.	Description	Qty.	Notes
1	458954	Shoe - Guide	2	
2	5B6316	Screw	10	
3	474596	Bracket - Guide Shoe	2	
4	458170	Rod - Tie	1	
5	286922	Sideplate - Squeegee Assembly	2	
6	472756	Nut - Tie Rod, Long	1	
8	650703	Bearing	4	
9	1C7106	Spring	2	
10	462139	Washer	1	
11	853087	Washer - Lock	13	
12	852682	Screw	12	
13	458174	Spacer - Sleeve	1	
14	550781	Gear - Drive	1	
15	452044	Key	1	
16	852611	Washer	11	
17	852807	Screw	10	
18	650705	Bearing	6	
19	458389	Bearing	2	
20	458175	Shaft	1	
21	467017	Roller - Tan Phenolic	2	F and H.
22	458394	Rod - Tie	3	
23	458391	Shaft	2	
24	458949	Roller - Tan Phenolic	2	G and E.
25	458390	Shaft	3	
26	458393	Shaft	1	
27	467016	Roller - Tan Phenolic	1	D.
28	458423	Roller - Tan Phenolic	1	C.
29	458162	Bracket - Guide Shoe	2	
30	246915	Roller - White Silicone	1	B. Previously gray silicone.
31	5B6099	Roller - White Silicone	1	A. Previously gray silicone.

Note
Quantities are for the entire Rack.

Figure 3–18 Squeegee Assembly - Nondrive Side

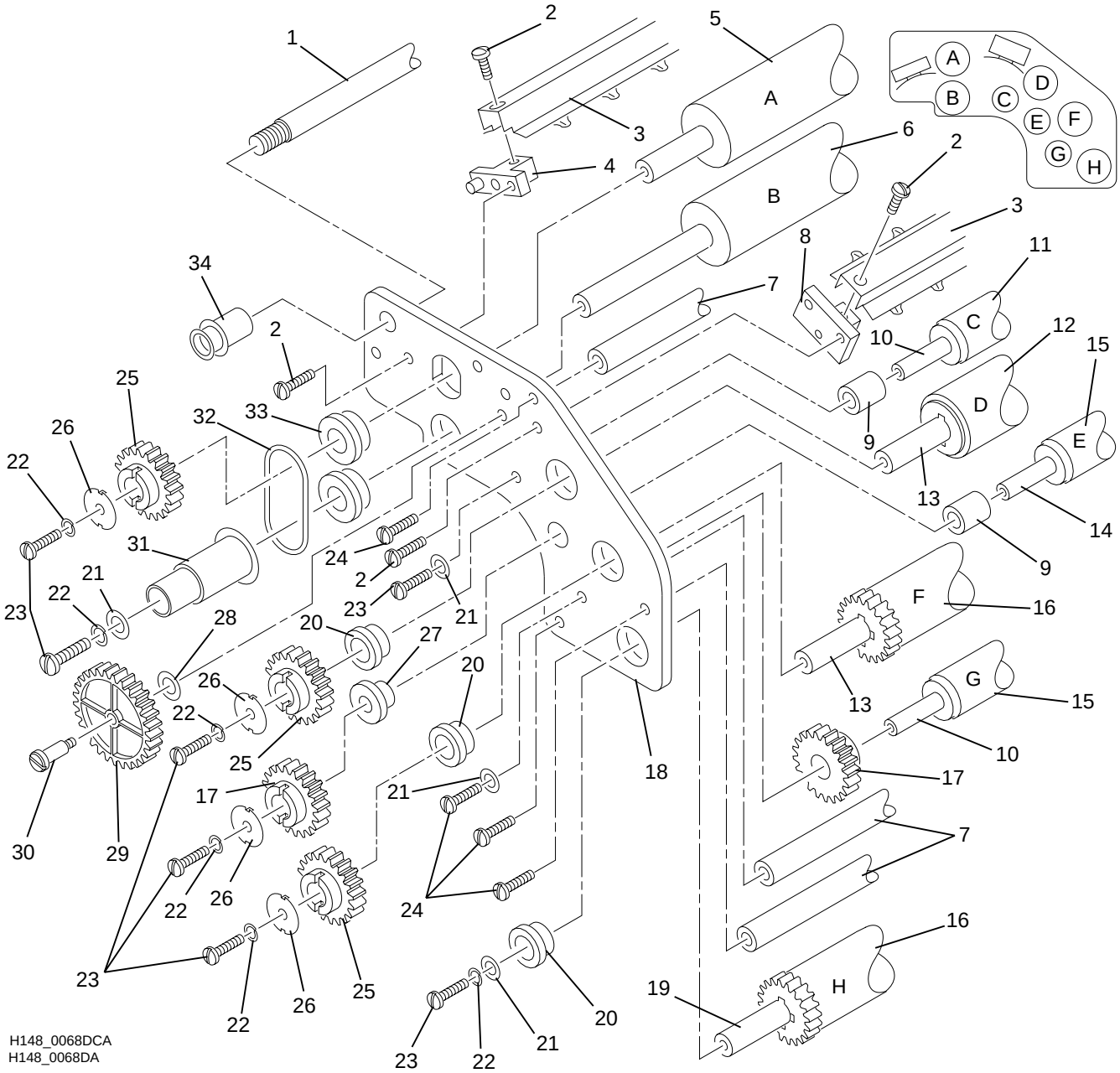

Figure 3–18

Item	Part No.	Description	Qty.	Notes
1	458170	Rod - Tie	1	
2	5B6316	Screw	10	
3	458954	Shoe - Guide	2	
4	474596	Bracket - Guide Shoe	2	
5	5B6099	Roller - White Silicone	1	A. Previously gray silicone.
6	246915	Roller - White Silicone	1	B. Previously gray silicone.
7	458394	Rod - Tie	3	
8	458162	Bracket - Guide Shoe	2	
9	1C4981	Spacer	2	
10	458391	Shaft	2	
11	458423	Roller - Tan Phenolic	1	C.
12	467016	Roller - Tan Phenolic	1	D.
13	458390	Shaft	3	
14	458393	Shaft	1	
15	458949	Roller - Tan Phenolic	2	E and G.
16	467017	Roller - Tan Phenolic	2	F and H.
17	458382	Gear	2	
18	286922	Sideplate - Squeegee Assembly	2	
19	458175	Shaft	1	
20	650705	Bearing	6	
21	852611	Washer	11	
22	853087	Washer - Lock	13	
23	852682	Screw	12	
24	852807	Screw	10	
25	458384	Gear	3	
26	458208	Washer	4	
27	458389	Bearing	2	
28	180977	Washer	1	
29	458385	Gear - 29-Tooth	1	
30	458386	Screw - Shoulder	1	
31	458236	Spacer - Sleeve	1	
32	1C7106	Spring	2	
33	650703	Bearing	4	
34	472755	Nut - Tie Rod, Short	1	

Note
Quantities are for the entire Rack.