Publication No. 5B6729
May 1997
Supersedes January 1996

OPERATOR MANUAL
for the
Kodak X-Omat 5000 RA Processor

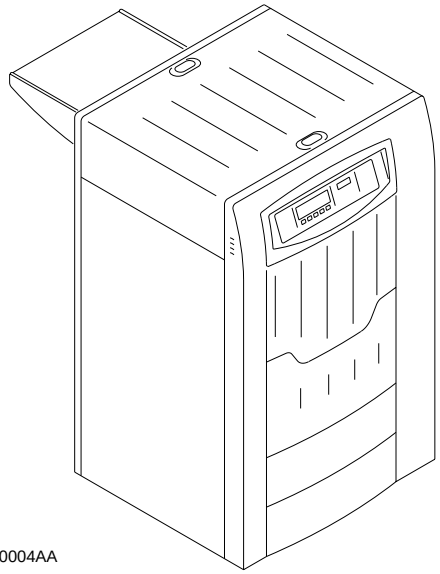

H148_0004AA

© Eastman Kodak Company

PLEASE NOTE The information contained herein is based on the experience and knowledge relating to the subject matter gained by Eastman Kodak Company prior to publication.

No patent license is granted by this information.

Eastman Kodak Company reserves the right to change this information without notice, and makes no warranty, express or implied, with respect to this information. Kodak shall not be liable for any loss or damage, including consequential or special damages, resulting from any use of this information, even if loss or damage is caused by Kodak's negligence or other fault.

Warning

To avoid hazardous conditions, keep floors and floor coverings around your *Kodak X-Omat* Processor and associated drains clean and dry at all times. Any accumulation of fluids from mixing tanks, drain lines, etc, should be cleaned up immediately. In the event of an accumulation of liquid due to backup, overflow, or other malfunctions of the drain associated with your *Kodak X-Omat* Processor, call a plumber or other contractor to correct any problem with the drain. Kodak accepts no responsibility or liability whatsoever for the serviceability of any drain connected to or associated with a *Kodak X-Omat* Processor. Such drains are the sole responsibility of the customer.

Table of Contents

Description	Page
Introduction	4
Intended Audience	4
How To Use this Manual	4
Overview	5
Product Description	5
Identifying the Covers and Panels and Other Components of the Processor	6
Using the Display Panel	7
Adjusting the Contrast of the Display Panel	8
Enabling the Auto Dimming Feature	8
Adjusting the Intensity of the Interface Control Panel	8
Using the Access Code	9
Changing the Access Code	9
Limiting Access to the Processor Setup	11
Changing the User Access	11
Operating Characteristics	12
Operating Instructions	13
Performing the Daily Start-Up Procedure	13
Performing the Shutdown Procedure	14
Film Feeding	15
Default Setpoints and Configurations	17
Summary of Default Settings	17
Basic Setup Options	19
Selecting a Film Processing Cycle	19
Procedure for Selecting the Rapid, Standard, or Extended Cycle:	20
Procedure for Selecting the K/RA Cycle:	20
Setting the Dryer Setpoint Temperature	22
Setting the Time and Date	23
Displaying the Time and Date	25
Calibrating the Replenishment System	26
Selecting a Replenishment Mode	28
Selecting the Standby Mode	30

Setting the Volume of the Alarm . . . 32
Selecting Temperature Lockout Mode . . . 34
Selecting Display Units . . . 36
Selecting the Receptacle Mode . . . 37
Selecting the Display Language . . . 39
Advanced Setup Options . . . 41
Setting the Developer and Fixer Setpoint Temperatures . . . 41
Displaying the Fixer Temperature . . . 43
Setting the Developer and Fixer Replenishment Volumes . . . 44
Verifying the Replenishment Rates . . . 46
Setting the Transport Speed . . . 47
Setting the Automatic On and Off Timers . . . 49
Procedure for Setting Timer1 Initially . . . 49
Setting the On Time: . . . 50
Setting the Off Time: . . . 51
Procedure for Setting Timer2 Initially . . . 52
Procedure for Setting the On and Off Timers for the Remaining Days of the Week 52
Copying On and Off Timer Settings: . . . 52
Setting Different On and Off Times for the Remaining Days: . . . 52
Changing the On and Off Timer Settings . . . 54
Selecting the Start-Up Option . . . 56
Entering and Exiting Sleep Mode . . . 57
Procedure for Entering Sleep Mode: . . . 58
Procedure for Exiting Sleep Mode: . . . 58
Selecting Sleep Mode Options . . . 59
Procedure for Turning On or Off the Roller Jog Option: . . . 59
Procedure for Turning On or Off the Cool Down Option: . . . 61
Usage Information . . . 62
Obtaining the Developer Usage Volume . . . 62
Obtaining the Developer Usage Rate . . . 63
Obtaining the Fixer Usage Volume . . . 65
Obtaining the Fixer Usage Rate . . . 66
Selecting the Film Size for Each Setup Group . . . 68
Obtaining Film Usage Rates . . . 69
Obtaining the Processor's Software Version . . . 71
Other Functions . . . 72
Replenishment Solutions . . . 73
Mixing the Developer and Fixer Solutions . . . 73
Filling the Processor Tanks . . . 73
Draining the Processor Tanks . . . 75
Menu Flowchart . . . 77
Preventive Maintenance . . . 81
Problem Solving . . . 83
Warranty . . . 85
Publication History . . . 87

Introduction

Intended Audience

This manual is written for all users of the *Kodak X-Omat* 5000 RA Processor. The novice user needs only a basic working knowledge of automatic radiographic film processors in order to understand the instructions and procedures outlined in this manual. The experienced user may only need to refer to this manual when using some of the features and functions new to the 5000 RA Processor.

How To Use this Manual

The manual is organized by topics. Each topic contains all the information you need to perform the given task:

- instructions for navigating through the required menus
- sample menu displays that appear after each key selection

Overview

Product Description

The *Kodak X-Omat* 5000 RA Processor is a general-purpose radiographic processor, which uses a conventional roller transport system to accommodate both roll and sheet film.

Features of the 5000 RA Processor include microprocessor control, an operator interface, error detection and indicators, and “smart” replenishment. The 5000 RA Processor also provides 4 operator-selectable film processing cycles, which run at 4 default transport speeds. The 4 cycles are:

- K/RA
- Rapid
- Standard
- Extended

Each cycle has default parameters or setpoints for transport speed, developer and fixer replenishment volumes and for developer, fixer, and Dryer temperatures. These default parameters are stored in memory, but can be modified by the operator. See the table on Page 18 for these default parameters and setpoints.

All cycles, except for the K/RA cycle, use standard RP chemicals and film. The K/RA cycle requires RA chemicals and film.

Identifying the Covers and Panels and Other Components of the Processor

Figure 1 **Receive and Feed Ends of the Processor**

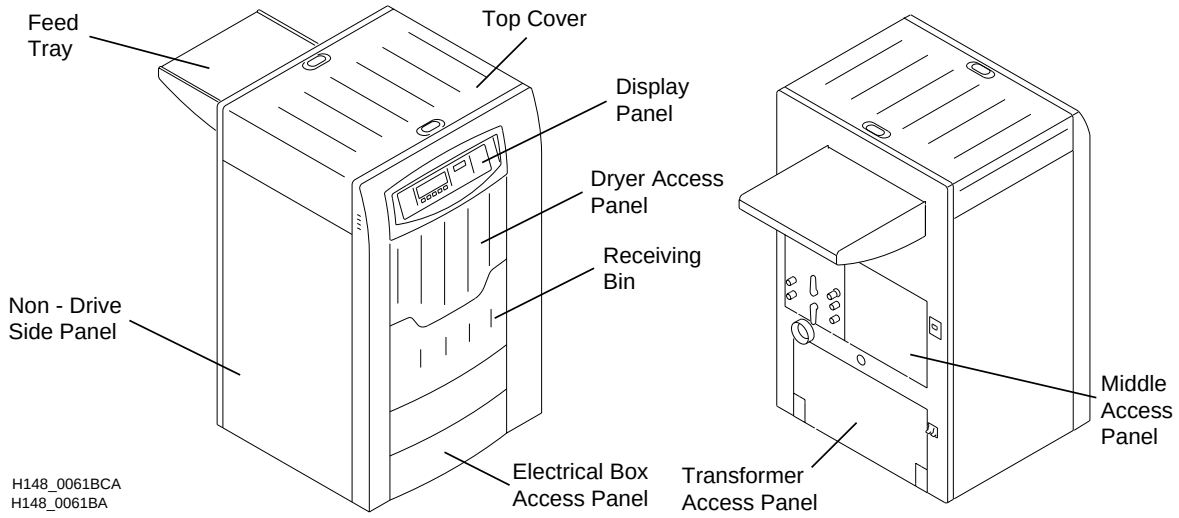

Figure 2 **Circuit Breaker, Safelight Receptacle, and Interface Control Panel**

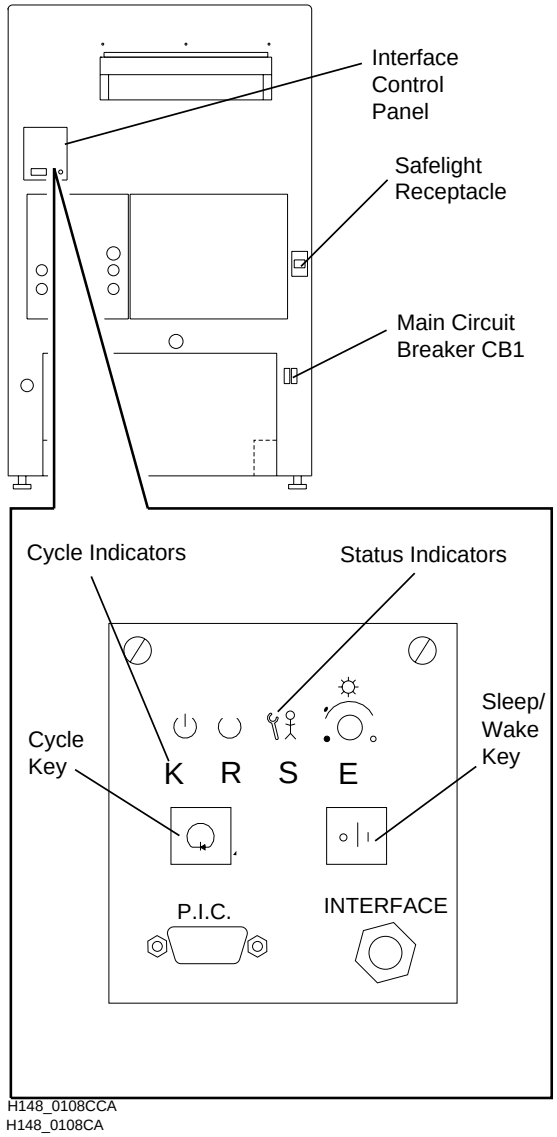

Using the Display Panel

The operator can select, change, and monitor processing variables for the *Kodak X-Omat* 5000 RA Processor, using the Display Panel. See the figure below.

Figure 3 **Display Panel**

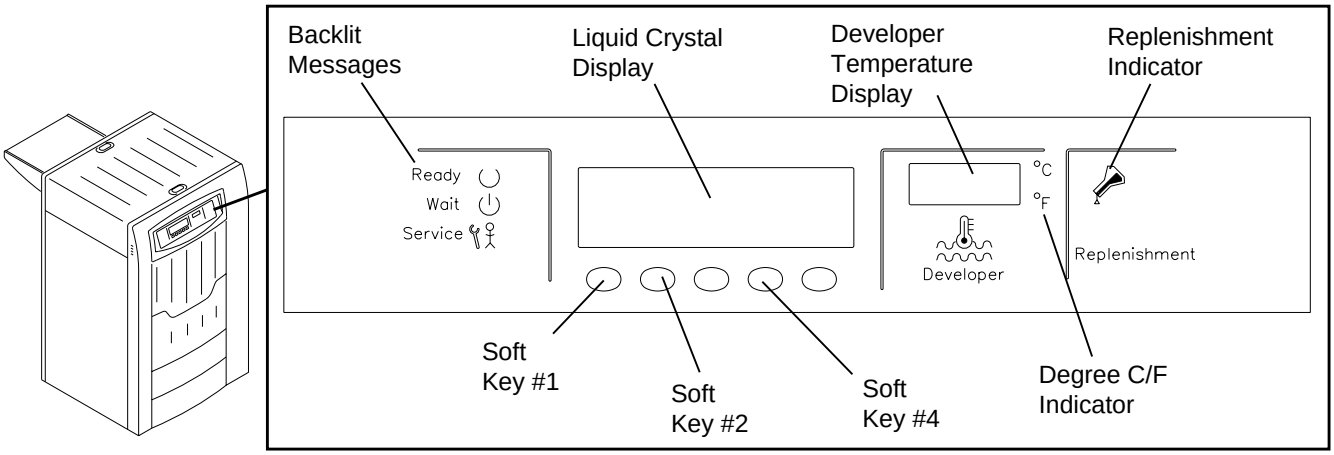

H148_0105BCA
H148_0105BA

The Display Panel provides the following status information of the Processor:

- Ready, Wait, and Service Status Indicators
- Status/Error Messages
- Current cycle
- Current function for each of the Soft Keys
- Developer Temperature °C or °F Indicator, which provides the current temperature of the developer in the Processor Tank
- Replenishment Indicator, which illuminates when either Replenishment Pump is operating

Explanation of Status Indicators

The 3 Status Indicators provide the following information:

- If the Green “Ready” Indicator is illuminated, the Processor is ready to accept film.
- If the Yellow “Wait” Indicator is illuminated, the Processor has not yet reached optimum film processing conditions.
- If the Red “Service” Indicator is illuminated, the Processor is in need of service.

A second set of Status Indicators is located on the feed end of the Processor. These 3 Status Indicators operate in the same way as the Status Indicators on the Display Panel.

Located below the Status Indicators on the feed end of the Processor, is a second row of Indicators, which indicate the current film processing cycle.

Indicator Illuminated	Operating Cycle Selected
K	K/RA
R	Rapid
S	Standard
E	Extended

The Display Panel also has 5 keys called “Soft Keys.” These keys, located just below the message area of the Display Panel, allow you to select, change, and monitor Processor variables.

				CURRENT CYCLE
MESSAGE				
SOFT KEY 1	SOFT KEY 2	SOFT KEY 3	SOFT KEY 4	SOFT KEY 5

After you press a key to make a selection from the menus displayed, the functions of the first 4 keys change to describe the next lower level of menu selections. Keys that are not used in a particular menu level remain blank. Pressing the fifth key, “DONE/RETURN,” executes the function and causes the previous menu level to be displayed.

Several characteristics of the Soft Keys to be aware of are:

1. All screens that allow the operator to change data or the configuration of the Processor display a “DONE/RETURN” key, which allows you to return to the previous screen.
2. All options that allow you to change data, configuration, or affect the functionality of the Processor take effect immediately after you release the key, even if you do not press the DONE/RETURN key.
3. To modify numerical values, use the up and down arrow keys. Each time you press either the up or down arrow key, the value will change by one unit. To scroll through an entire range of values quickly, simply press and hold either the up or down arrow key.

Adjusting the Contrast of the Display Panel

[1] To lighten the display, press and hold Soft Key 4 on the Display Panel. At the same time, press Soft Key 2 on the Display Panel to obtain the desired contrast.

[2] To darken the display, press and hold Soft Key 4 on the Display Panel. At the same time, press Soft Key 1 on the Display Panel to obtain the desired contrast.

Enabling the Auto Dimming Feature

The Display Panel remains illuminated unless the Processor is placed in Sleep Mode. However, if your Processor is installed in a darkroom and you want the Display Panel to dim when the room is dark to avoid fogging films, your service provider can enable the roomlight Sensor. Enabling the Sensor will cause the Display Panel to dim automatically when the room lights are turned off.

Adjusting the Intensity of the Interface Control Panel

The Light Intensity Adjustment Control allows you to change the brightness of the Indicators located on the feed end of the Processor. If the room is brightly lit, no adjustment is available; the Indicators illuminate at full intensity. When the room is dark or dimly lit, you can adjust the intensity by rotating the Adjustment Control.

[1] To brighten the intensity of the Indicators, rotate the Adjustment Control clockwise ↷.

[2] To dim the intensity of the Indicators, rotate the Adjustment Control counterclockwise ↶.

Using the Access Code

Only service personnel and one primary person should have use of the access code. The default access code **4213** is required to perform certain functions.

Simply press the "GO TO SETUP" key on the Walk-Up Menu and enter the access code to perform the functions listed below:

- to change setup information preset at the factory
- to change to or from the "K/RA" cycles

If the Limited Access Feature is off, an access code is **not** necessary to perform the functions listed below:

- to select the Processor cycle (except "K/RA")
- to change the Dryer temperature
- to display the current fixer temperature
- to place the Processor in Sleep mode
- to display the time and date

The access code can be changed at any time by the user. To change the access code, follow the procedure below. If you forget the new access code and need to revert to the original access code, call your service provider.

Changing the Access Code

[1] From the Walk-Up Menu, press the "GO TO SETUP" key.

STD READY				
DRYER TEMP	SLEEP	SELECT CYCLE	MORE	GO TO SETUP

[2] Enter the 4-digit access code.

1	2	3	4	CANCEL REQUEST

[3] Press the "MORE" key.

▲	▼	CHEM/ CYCLE	MORE	DONE/ RETURN

[4] Press the "OPTIONS" key.

INFO	SETUP	OPTIONS		DONE/ RETURN

[5] Press the "MORE" key.

REPLEN MODE	DAILY STARTUP	DISPLAY UNITS	MORE	DONE/ RETURN

[6] Press the "ACCESS CODE" key.

ACCESS CODE	USER ACCESS	TEMP LOCK	MORE	DONE/ RETURN

[7] Enter the 4 digits of the new access code.

1	2	3	4	CANCEL REQUEST

[8] Enter the same new 4-digit access code. A message will appear stating whether the new access code has been accepted.

[9] Press the “DONE/RETURN” key repeatedly until you return to the display shown below. Then press the “YES” key to return to the Walk-Up Menu.

EXIT SETUP?				
YES				CANCEL REQUEST

Note

If you forget the new access code and need to revert to the original access code, call your service provider.

Limiting Access to the Processor Setup

Enabling the Limit Access feature prevents users from adjusting the Dryer temperature or changing the processing cycle without first entering the access code. When this feature is selected, only those operators who know the correct access code have the ability to change the dryer temperature or the processing cycle. While this feature is selected, the Cycle Change Switch on the feed end of the Processor remains inactive.

Changing the User Access

[1] From the Walk-Up Menu, press the “GO TO SETUP” key.

STD READY				
DRYER TEMP	SLEEP	SELECT CYCLE	MORE	GO TO SETUP

[2] Enter the 4-digit access code.

1	2	3	4	CANCEL REQUEST

[3] Press the “MORE” key.

▲	▼	CHEM/ CYCLE	MORE	DONE/ RETURN

[4] Press the “OPTIONS” key.

INFO	SETUP	OPTIONS		DONE/ RETURN

[5] Press the “MORE” key.

REPLEN MODE	DAILY STARTUP	DISPLAY UNITS	MORE	DONE/ RETURN

[6] Press the “USER ACCESS” key.

ACCESS CODE	USER ACCESS	TEMP LOCK	MORE	DONE/ RETURN

[7] Press the “LIMIT ACCESS” key.

CURRENT ACCESS IS LIMITED				
LIMIT ACCESS	ALLOW ACCESS			DONE/ RETURN

[8] Press the “DONE/RETURN” key repeatedly until you return to the display shown below. Then press the “YES” key to return to the Walk-Up Menu.

EXIT SETUP?				
YES				CANCEL REQUEST

Operating Characteristics

- All menus appearing before the point you are required to enter the access code give you only **20 seconds** to press a key. If you do not press a key within that time, the Walk-Up Menu will appear.
- All menus appearing **after** the point you are required to enter the access code give you **2 minutes** to press a key. If you do not press a key within that time, the Walk-Up Menu will appear.
- When you first turn on the Processor, the wash water and Drive Motor run for 4 minutes and then turn off. The Replenishment Pumps also turn on briefly.
- If either the developer or fixer solution evaporated while the Processor was off, the developer and fixer Tanks will be automatically replenished to their overflow levels when you turn on the Processor.
- When film is fed, the Drive Motor, the Dryer Blower, and water turn on immediately.
- The Drive Motor will not operate if the Top Cover of the Processor is removed.
- The Display Panel remains illuminated unless the Processor is placed in Sleep Mode. However, if your Processor is installed in a darkroom and you want the Display Panel to dim when the room is dark to avoid fogging films, your service provider can enable the roomlight Sensor. Enabling the Sensor will cause the Display Panel to dim automatically when the room lights are turned off.
- All errors and warnings cause the alarm on the Processor to sound twice when a film is fed into the Film Detector.

Performing the Daily Start-Up Procedure

Note

You can also program the Processor to turn on automatically by setting the Automatic On Timer. See Page 49 for the procedure on how to program the Automatic Timers.

[1] Check that the Racks and Crossovers are in their correct positions.

[2] Check that the Crossover Fill Trough is in position.

[3] Check that the 2 Water Troughs (not shown) are installed correctly on the bottom of the Developer/Fixer and Fixer/Wash Crossovers.

Figure 4 **Checking the Position of the Racks and Crossovers**

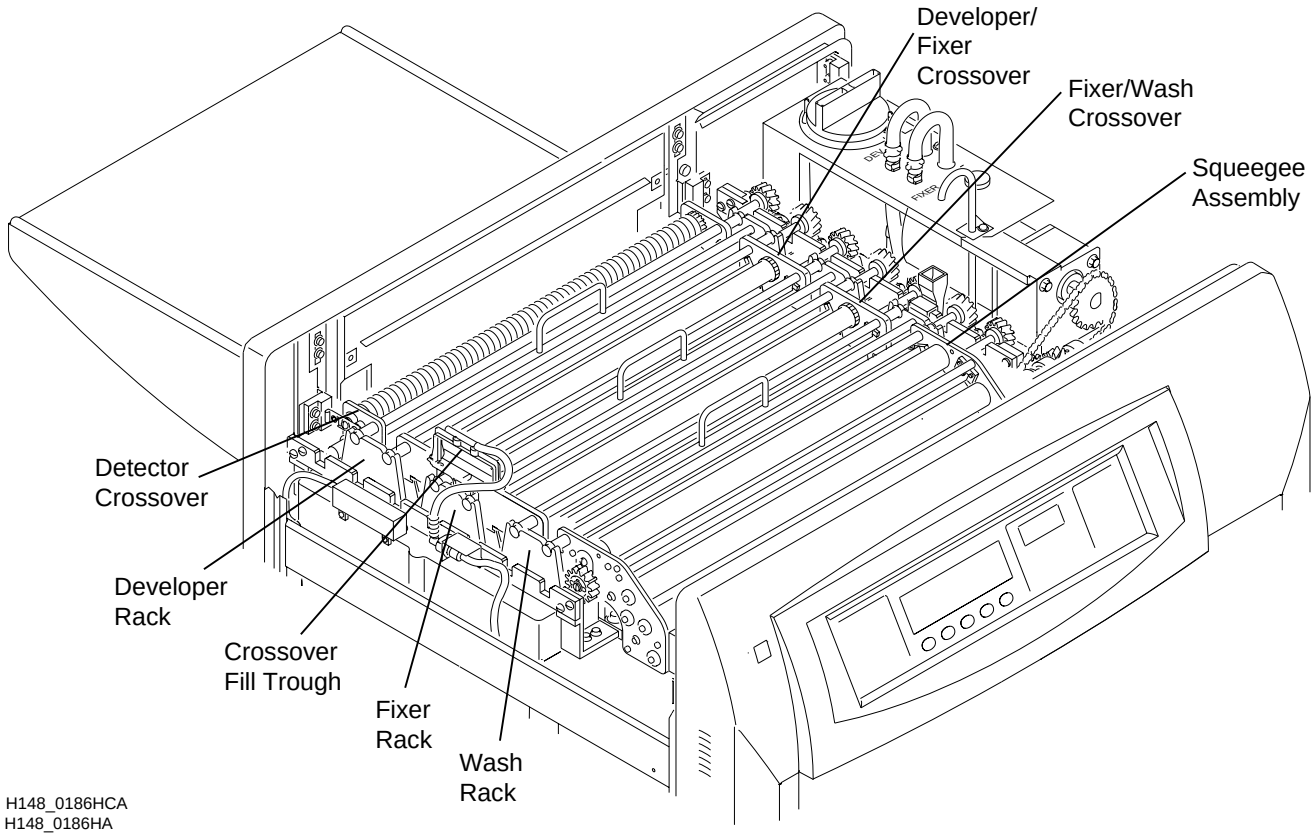

Figure 5 **Installing the Evaporation Covers**

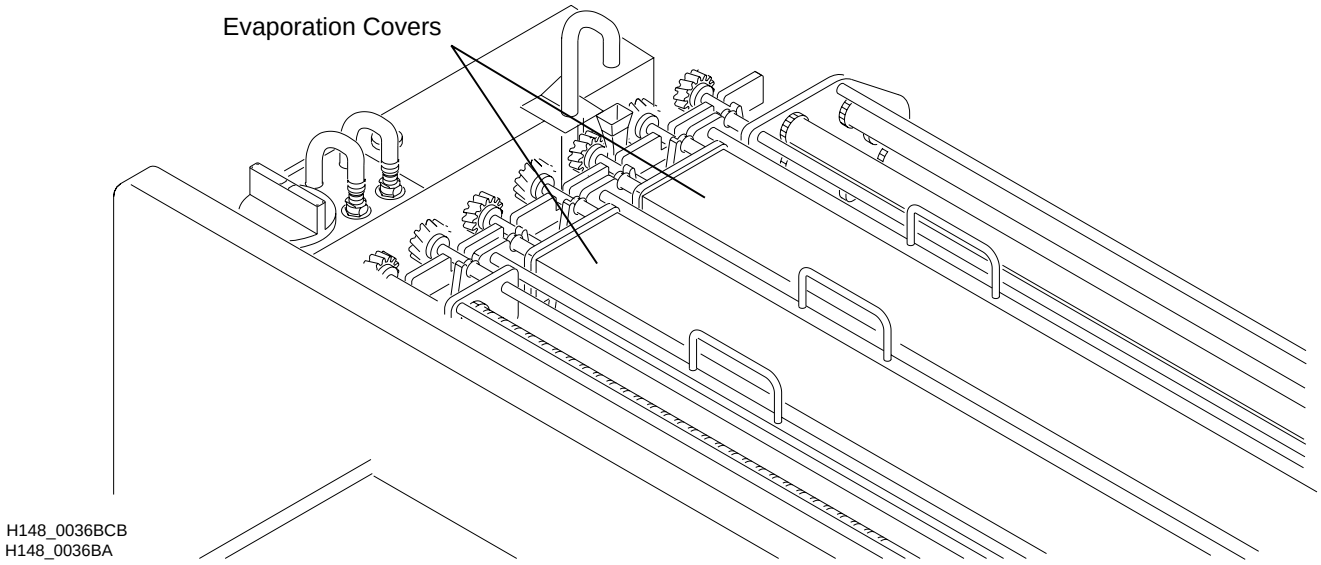

[4] Check that developer and fixer solutions are near the overflow levels of each Tank.

[5] Install the Evaporation Covers on the Crossovers and the Top Cover on the Processor.

[6] Turn on the water supply.

Important

The incoming water temperature should be between 4 and 29°C (40 and 85°F).

[7] Remove any film from the Feed Tray.

[8] Move the wall power switch to the “ON” position.

[9] Move the main Circuit Breaker CB1 to the “ON” position.

[10] For optimum processing quality, allow approximately 20 minutes for the processing solutions to reach the correct operating temperature before you feed film. The Ready Indicator will illuminate once the solutions have reached the correct temperature.

Performing the Shutdown Procedure

Note

You can also program the Processor to shut down automatically by setting the Automatic Off Timer. See Page 49 for the procedure on how to set the Automatic Timers.

[1] Move the main Circuit Breaker CB1 to the “OFF” position.

[2] Move the wall power switch to the “OFF” position.

[3] Turn off the water supply.

Film Feeding

Sheet Film: See the figure for the recommended film-insertion procedure. Arrows indicate the direction in which films should be fed into the Processor. Choose either the right or left edge of the Feed Tray and always feed films **square** with that edge of the Feed Tray.

Caution

- When feeding multiple films simultaneously (side by side), leave a gap of at least 2.54 cm (1.0 in.) between the films.
- Align films with either the right or left edge of the Feed Tray.
- **Do not** pull back films after you feed them into the Processor.
- **Do not** pull on film as it exits the Processor.
- **Do not** allow more than 100 sheets of films to accumulate in the Receiving Bin at one time.

Figure 6 **X-Ray Film Sizes**

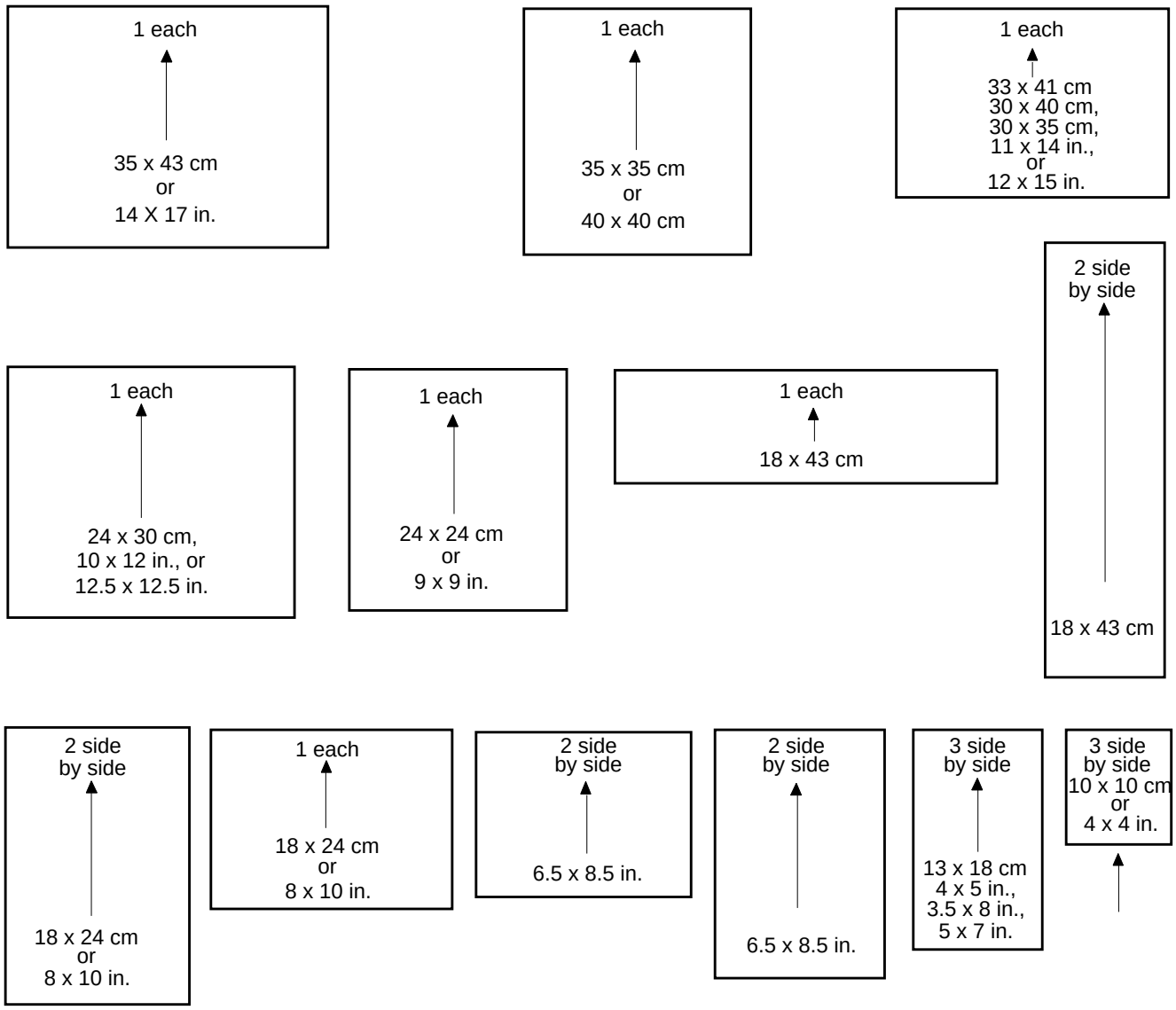

H150_9000DC

Roll Film: Use a sheet of film as a Leader. Make sure that the sheet film is as wide as, or wider than, the roll film and at least 18 cm (7 in.) long.

Using 2.5 cm (1 in.) wide tape, such as **3M SCOTCH** Brand Polyester Film Tape No. 850, fasten the roll film, emulsion side up, to the Leader, making sure that the adhesive side of the tape is not exposed. Most other types of tape are not acceptable, because their bases are soluble in the processing solutions.

Note

Tape the leading edge of the roll film, **emulsion side up,** within 5.1 cm (2 in.) of the vertical (lengthwise) center of the Leader. See the figure.

Important

For reliable transport of the roll film, apply slight tension on both the feed and take-up ends of the roll film, such as with a *Kodak* Roll Film Take-Up, Model 11 (CAT No. 118 6899).

Figure 7 **Attaching a Leader to Roll Film**

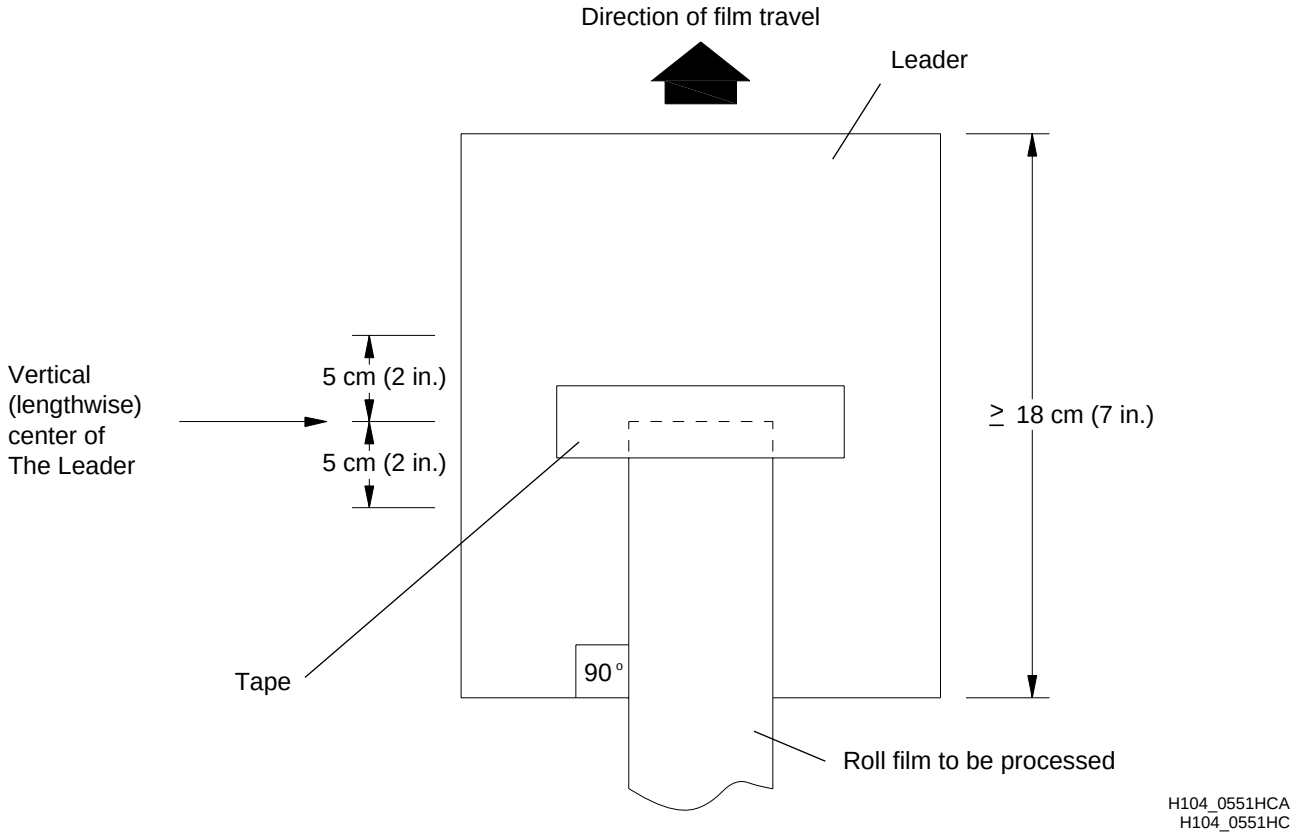

Default Setpoints and Configurations

Section 1: Summary of Default Settings

Setup Information

Setup information consists of the process setpoints and the film Processor configurations. All setup information that was preset at the factory is listed in the tables below.

Setup information is stored in battery backed-up RAM (Random Access Memory). Therefore, you do not need to program new values every time that you turn on the Processor. **Even if power to the Processor is interrupted or the Processor is turned off, you do not need to program the Processor.**

If you wish, you may change the setup information by using the Soft Keys on the Display Panel. See the following pages for instructions on how to set up the Processor.

Table 1 Default Processor Configurations for All Cycles

Access Code	4-2-1-3
Processing Cycle	*Standard
Processing Chemicals	RP
Dryer Temperature	*49°C (120°F)
Time and Date	Operator Must Enter
Pump Calibration	Operator Must Complete
Alarm Volume	Mid Range (7)
Replenishment Mode	Automatic
Temperature Lockout Mode	Disabled
Display Units	°F, in./min
Receptacle Mode	Safelight Mode
Standby Mode	Interval
Display Language	English
Access to Processor Setup	Allowed
Sleep Mode Options Roller Jog Cool Down	 Off Off
Automatic On and Off Timers	Off

*Operator Must Ensure That the Setting is Correct for the Application.

Table 2 Default Processor Setpoints for Each Cycle

Item	Chemicals and Cycle			
	RA Chemicals	RP Chemicals		
	K/RA	RAPID	STANDARD	EXTENDED
Developer Temperature	36.7°C (98°F)	38.3°C (101°F)	35.0°C (95°F)	35.0°C (95°F)
Fixer Temperature (minimum)	35.0°C (95°F)	35.0°C (95°F)	35.0°C (95°F)	35.0°C (95°F)
Developer Replenishment Volume (35 x 43 cm sheet) Automatic Flooded	60 mL 65 mL	60 mL 65 mL	60 mL 65 mL	60 mL 65 mL
Fixer Replenishment Volume (35 x 43 cm sheet) Automatic Flooded	85 mL 65 mL	85 mL 65 mL	85 mL 65 mL	85 mL 65 mL
Transport Speed	342.9 cm/min (135 in./min)	251.5 cm/min (99 in./min)	167.6 cm/min (66 in./min)	86.4 cm/min (34 in./min)
Dryer Temperature	48.9°C (120°F)	48.9°C (120°F)	48.9°C (120°F)	48.9°C (120°F)

Section 2: Basic Setup Options

Selecting a Film Processing Cycle

Description:

Figure 8 **Selecting a Cycle Using the Cycle Key**

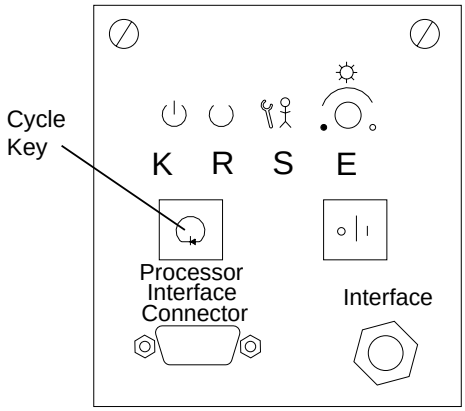

H148_0052ACC
H148_0052AA

The 5000 RA Processor offers 4 cycles to process film in the Processor: Extended, Standard, Rapid, and K/RA. You may select the Extended, Standard, or Rapid cycle in either of 2 ways: by using the Cycle Change Key or by using the Display Panel. The Cycle Change Key is located on the feed end of the Processor. Selecting the Extended, Standard, or Rapid cycle does not require the use of the access code. The Kwik
(K/RA) cycle, which provides the fastest film processing time, is only available through the Display Panel and requires the use of the access code.

After you select a cycle, the Microprocessor automatically adjusts the transport speed, replenishment volumes, and solution temperatures to the programmed values for the selected cycle. When changing from one cycle to another, you do, however, need to set the Dryer temperature to the lowest setting that still provides good drying. See the procedure for setting the Dryer temperature on Page 22.

Table 3 Cycle Information for the Processor

Cycle	Process Time	Drop Time	Film and Chemicals	Throughput films/hour
Kwik (K/RA)	40.3 seconds	43.5 seconds	RA Film and Chemicals	483
Rapid	55.0 seconds	59.3 seconds	RA or RP Film, RP Chemicals	354
Standard	82.4 seconds	88.9 seconds	RA or RP Film, RP Chemicals	236
Extended	160.0 seconds	172.5 seconds	RP Film and Chemicals	122

Cycle, as used in this table, refers to the film processing cycle that is currently selected.

Process Time refers to the time it takes the **leading edge** of a 35 x 43 cm (14 x 17 in.) sheet of film to travel from the Detector Rollers to the Exit Rollers of the Dryer Rack.

Drop Time refers to the time from the **leading edge** of a 35 x 43 cm (14 x 17 in.) sheet of film fed 43 cm wide entering the Detector Rollers until the **trailing edge** exits the Dryer Rack.

Film and Chemicals refer to the combination of film and chemicals required for optimum image quality when using the Processor. Use *Kodak RP X-Omat* Developer Replenisher and *Kodak RP X-Omat* Fixer and Replenisher, or equivalents, with the Extended, Standard, and Rapid cycles. **Only Kodak RA X-Omat** Films and Chemicals may be used for the K/RA cycle. Contact your Kodak representative to discuss the best option for your needs.

Throughput refers to the number of 35 x 43 cm (14 x 17 in.) sheets of film fed 43 cm wide that can be processed in one hour.

Procedure for Selecting the Rapid, Standard, or Extended Cycle:

[1] From the Walk-Up Menu, press the “SELECT CYCLE” key.

READY				STD
DRYER TEMP	SLEEP	SELECT CYCLE	MORE	GO TO SETUP

[2] Press the appropriate key for the desired cycle.

RAPID CYCLE	STD CYCLE	EXTD CYCLE		DONE/ RETURN

[3] Press the “DONE/RETURN” key repeatedly until you return to the Walk-Up Menu.

Procedure for Selecting the K/RA Cycle:

[1] From the Walk-Up Menu, press the “GO TO SETUP” key.

READY				STD
DRYER TEMP	SLEEP	SELECT CYCLE	MORE	GO TO SETUP

[2] Enter the 4-digit access code.

1	2	3	4	CANCEL REQUEST

[3] Press the “CHEM/CYCLE” key.

▲	▼	CHEM/ CYCLE	MORE	DONE/ RETURN

[4] Press the appropriate key for the desired chemicals.

PRESS BUTTON TO SELECT				
RP	RA			DONE/ RETURN

[5] One of the following displays will appear:

(a) If you selected RP chemicals, press the appropriate key for the desired cycle.

STD PRESS BUTTON TO SELECT				
RAPID CYCLE	STD CYCLE	EXTD CYCLE		DONE/ RETURN

(b) If you selected RA chemicals, press the “K/RA CYCLE” key.

K/RA PRESS BUTTON TO SELECT				
K/RA CYCLE				DONE/ RETURN

[6] Press the “DONE/RETURN” key repeatedly until you return to the display shown below. Then press the “YES” key to return to the Walk-Up Menu.

EXIT SETUP?				
YES				CANCEL REQUEST

Setting the Dryer Setpoint Temperature

Description:

When selecting a Dryer temperature, always select the lowest temperature that still provides good film drying. Films exiting the Processor should be “just dry” and cool to the touch in order to prevent artifacts. You will find it necessary to adjust the Dryer temperature whenever you change the film processing cycle and possibly when you change the type, size, or quantity of film you are processing. You may choose to have the Dryer temperature setpoint displayed in either degrees Celsius (°C) or degrees Fahrenheit (°F). To select the display units, see the procedure on Page 36.

Default Setting: 49°C (120°F)

Accepted Range: 21 - 68°C (70 - 155°F)

Procedure:

[1] From the Walk-Up Menu, press the “DRYER TEMP” key.

STD READY				
DRYER TEMP	SLEEP	SELECT CYCLE	MORE	GO TO SETUP

[2] Use the up and down arrow keys to select the desired Dryer temperature.

STD 120°F = DRYER SETPOINT				
▲	▼			DONE/ RETURN

[3] Press the “DONE/RETURN” key repeatedly until you return to the Walk-Up Menu.

Setting the Time and Date

Description:

By setting the Clock in the Processor, you can take advantage of several of the features that the Processor offers:

- Auto Start-Up and Shutdown
- Time and Date Stamping of Error Messages

When setting the time and date, you may choose from several different formats:

Time Formats:

- 12 Hour
- 24 Hour

Date Formats (where M=Month, D=Day, and Y=Year):

- M-D-Y
- D-M-Y
- Y-M-D

Procedure:

[1] From the Walk-Up Menu, press the “GO TO SETUP” key.

READY				STD
DRYER TEMP	SLEEP	SELECT CYCLE	MORE	GO TO SETUP

[2] Enter the 4-digit access code.

1	2	3	4	CANCEL REQUEST

[3] Press the “MORE” key.

▲	▼	CHEM/ CYCLE	MORE	DONE/ RETURN

[4] Press the “SETUP” key.

INFO	SETUP	OPTIONS		DONE/ RETURN

[5] Press the “CLOCK” key.

PROCESS	CLOCK	AUTO STARTUP	PUMP CALIB	DONE/ RETURN

[6] Press the “TIME FORMAT” key.

SET TIME	SET DATE	TIME FORMAT	DATE FORMAT	DONE/ RETURN

[7] Select the “FORMAT” key of your choice.

12 HOUR = TIME DISPLAY FORMAT				
12 HOUR FORMAT	24 HOUR FORMAT			DONE/ RETURN

[8] Press the “DONE/RETURN” key **once** to return to the format options.

[9] Press the “DATE FORMAT” key.

SET TIME	SET DATE	TIME FORMAT	DATE FORMAT	DONE/ RETURN

[10] Select the “FORMAT” key of your choice.

M-D-Y = DATE DISPLAY FORMAT				
M-D-Y FORMAT	D-M-Y FORMAT	Y-M-D FORMAT		DONE/ RETURN

[11] Press the “DONE/RETURN” key **once** to return to the set time and set date options.

[12] Press the “SET TIME” key.

SET TIME	SET DATE	TIME FORMAT	DATE FORMAT	DONE/ RETURN

[13] Use the up and down arrow keys to set the time in hours and minutes.

12:30 AM = CURRENT TIME				
▲ HOUR	▼ HOUR	▲ MINUTE	▼ MINUTE	DONE/ RETURN

[14] Press the “DONE/RETURN” key **once** to return to the set date option.

[15] Press the “SET DATE” key.

SET TIME	SET DATE	TIME FORMAT	DATE FORMAT	DONE/ RETURN

[16] Press the “SET DATE” key.

SET DATE	SET YEAR			DONE/ RETURN

[17] Use the up and down arrow keys to set the date.

10-31 = CURRENT DATE				
▲ MONTH	▼ MONTH	▲ DAY	▼ DAY	DONE/ RETURN

[18] Press the “DONE/RETURN” key **once** to return to the set year option.

[19] Press the “SET YEAR” key.

SET DATE	SET YEAR			DONE/ RETURN

[20] Use the up and down arrow keys to set the year.

1996 = CURRENT YEAR				
▲ YEAR	▼ YEAR			DONE/ RETURN

[21] Press the “DONE/RETURN” key repeatedly until you return to the display shown below. Then press the “YES” key to return to the Walk-Up Menu.

EXIT SETUP?				
YES				CANCEL REQUEST

Displaying the Time and Date

Description:

If you wish to display the current time and date, simply press the “TIME/DATE” key on the Display Panel. The current time and date will then appear on the Display Panel.

Procedure:

[1] From the Walk-Up Menu, press the “MORE” key.

READY				STD
DRYER TEMP	SLEEP	SELECT CYCLE	MORE	GO TO SETUP

[2] Press the “TIME/DATE” key.

DISPLAY FIX TEMP	TIME/DATE			DONE/ RETURN

[3] Press the “DONE/RETURN” key repeatedly until you return to the Walk-Up Menu.

Calibrating the Replenishment System

Description:

Calibrate the replenishment system every 3 months.

Calibrating the replenishment system determines the actual rate of the processing solution flowing through the Replenishment Pumps. To calibrate the Pump you need to first measure the volume of solution pumped during a set time period, and secondly enter the information into the microprocessor by using the procedure outlined below. The microprocessor then computes the flow rate of the solution through the Pump and adjusts the length of time that the Pump must operate so that the volume of replenishment delivered equals the replenishment volume selected.

Important

The volume of replenishment solution actually measured during this procedure is **not** the **volume delivered** for a 35 x 43 cm sheet of film.

Be sure to do the procedure below twice: once to calibrate the developer replenishment and once to calibrate the fixer replenishment.

Procedure:

[1] From the Walk-Up Menu, press the “GO TO SETUP” key.

READY				STD
DRYER TEMP	SLEEP	SELECT CYCLE	MORE	GO TO SETUP

[2] Enter the 4-digit access code.

1	2	3	4	CANCEL REQUEST

[3] Press the “MORE” key.

▲	▼	CHEM/ CYCLE	MORE	DONE/ RETURN

[4] Press the “SETUP” key.

INFO	SETUP	OPTIONS		DONE/ RETURN

[5] Press the “PUMP CALIB” key.

PROCESS	CLOCK	AUTO STARTUP	PUMP CALIB	DONE/ RETURN

[6] Press the “DEV CAL” key to calibrate the Developer Pump or the “FIX CAL” key to calibrate the Fixer Pump.

DEV CAL	FIX CAL			DONE/ RETURN

Figure 9 **Measuring the Replenishment Volume**

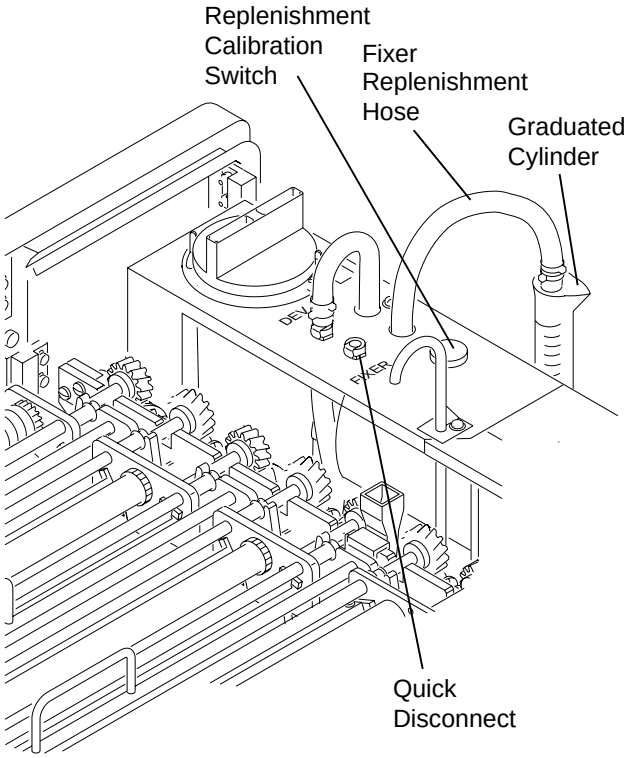

H148_0112GCA
H148_0112GA

Caution

Wear protective eyewear when executing the following procedure. Replenishment solutions are pumped quickly and may splash.

[7] Remove the Top Cover of the Processor.

[8] Disconnect the Quick Disconnect for the fixer replenishment (or developer replenishment).

[9] Insert the end of the Fixer Replenishment (or Developer Replenishment) Hose into a Graduated Cylinder.

[10] Hold the Graduated Cylinder outside of the Processor so that spills will not contaminate the processing solutions.

[11] Press the Replenishment Calibration Switch located next to the replenishment hoses.

[12] Measure and record the volume of replenishment delivered by the system.

[13] Dispose of the solution in the Graduated Cylinder.

[14] Do Steps 8 through 11 at least 2 more times.

[15] Determine the average volume of replenishment delivered.

[16] Install the Replenishment Hose into the respective quick disconnect Valve.

[17] Press the “UPDATE CAL VOL” key.

UPDATE CAL VOL				DONE/ RETURN

[18] Use the up and down arrow keys to increase or decrease the volume displayed on the screen until the volume displayed matches the average volume of replenishment as determined in Step 15.

60 mL = MEASURED DEVELOPER VOLUME

▲	▼			DONE/ RETURN

[19] Press the “DONE/RETURN” key repeatedly to return to the menu shown below.

DEV CAL	FIX CAL			DONE/ RETURN

[20] Repeat Steps 6 through 18 to calibrate the fixer (or developer) replenishment.

[21] Press the “DONE/RETURN” key repeatedly until you return to the display shown below. Then press the “YES” key to return to the Walk-Up Menu.

EXIT SETUP?

YES				CANCEL REQUEST

[22] Install the Top Cover of the Processor.

Selecting a Replenishment Mode

Description:

Automatic Replenishment Mode

Select this mode when you want the Processor to automatically adjust the replenishment volumes for developer and fixer according to film usage. See the procedure “Setting the Developer and Fixer Replenishment Volumes” beginning on Page 44.

Flooded Replenishment Mode

Select this mode if your site has low film usage of less than 25 sheets of 35 x 43 cm (14 x 17 in.) film or equivalent area per 8-hour day. **Check with your Kodak representative** to see whether the Flooded Replenishment Mode is right for the film usage of the Processor. Replenishment will be added automatically —

- every 5 minutes
- when the equivalent film area of 35 x 43 cm (14 x 17 in.) has been processed.

Tank Fill Mode

Select this mode to fill empty Processor Tanks automatically. A warning error stating that the “Tanks Currently Being Filled” occurs as the Tanks are filling. After the Tanks are filled, the error is cleared and the Processor will begin normal operation.

Disable Replenishment

Select this feature to disable the Replenishment Pumps before doing any of the cleaning procedures. When the Pumps are disabled, a warning error stating that the “Replenishment Pumps Disabled” occurs. To clear the error, simply select either Automatic or Flooded Replenishment.

Default Setting: Automatic

Procedure:

[1] Press the “GO TO SETUP” key.

Note

The “SELECT CYCLE” key does not appear if you have selected the K/RA cycle.

READY				STD
DRYER TEMP	SLEEP	SELECT CYCLE	MORE	GO TO SETUP

[2] Enter the 4-digit access code.

1	2	3	4	CANCEL REQUEST

[3] Press the “MORE” key.

▲	▼	CHEM/ CYCLE	MORE	DONE/ RETURN

[4] Press the “OPTIONS” key.

INFO	SETUP	OPTIONS		DONE/ RETURN

[5] Press the “REPLEN MODE” key.

REPLEN MODE	DAILY STARTUP	DISPLAY UNITS	MORE	DONE/ RETURN

[6] Select one of the 4 replenishment modes:

- Automatic Replenishment
- Flooded Replenishment
- Tank Fill
- Disable Replenishment

REPLENISHMENT MODE IS AUTO				
AUTO	FLOODED	TANK FILL	DISABLE REPLEN	DONE/ RETURN

[7] Press the “DONE/RETURN” key repeatedly until you return to the display shown below. Then press the “YES” key to return to the Walk-Up Menu.

EXIT SETUP?				
YES				CANCEL REQUEST

Selecting the Standby Mode

Description:

The Processor will enter the Standby mode after the trailing edge of the last sheet of film exits the Dryer. There are 2 modes within the Standby mode — the Interval mode and the Continuous mode. With the Processor in the Interval mode, the transport system and wash water turn on periodically to keep the Rollers wet. When the Processor is in the Continuous mode, the transport system will operate continuously at a reduced speed to keep the Rollers wet. In either mode, the following actions take place:

- the Dryer Blower and Heater turn on as needed to maintain the temperature of the Dryer.
- the wash water turns on every 8 minutes and remains on for 90 seconds to clean the Rollers.
- the solution Heaters remain on as needed to maintain the setpoint temperature of the solutions.

Default Setting: Interval

Procedure:

[1] From the Walk-Up Menu, press the “GO TO SETUP” key.

READY				STD
DRYER TEMP	SLEEP	SELECT CYCLE	MORE	GO TO SETUP

[2] Enter the 4-digit access code.

1	2	3	4	CANCEL REQUEST

[3] Press the “MORE” key.

▲	▼	CHEM/ CYCLE	MORE	DONE/ RETURN

[4] Press the “OPTIONS” key.

INFO	SETUP	OPTIONS		DONE/ RETURN

[5] Press the “MORE” key.

REPLEN MODE	DAILY STARTUP	DISPLAY UNITS	MORE	DONE/ RETURN

[6] Press the “MORE” key.

ACCESS CODE	USER ACCESS	TEMP LOCK	MORE	DONE/ RETURN

[7] Press the “STANDBY MODE” key.

STANDBY MODE	ROLLER JOG	COOL DOWN	MORE	DONE/ RETURN

[8] Press either key:

- the “INTER” key for the Interval Mode
- the “CONT” key for Continuous Mode

STANDBY MODE IS INTERVAL				
INTER	CONT			DONE/ RETURN

[9] Press the “DONE/RETURN” key repeatedly until you return to the display shown below. Then press the “YES” key to return to the Walk-Up Menu.

EXIT SETUP?				
YES				CANCEL REQUEST

Setting the Volume of the Alarm

Description:

The Processor includes an audible alarm that signals the user when to feed films in order to ensure the proper spacing of films. The alarm also signals the occurrence of an error or warning. The volume of the alarm is adjustable among 15 different levels. As you increase or decrease the volume of the alarm, the alarm sounds continuously so that you can hear the current volume level you selected. The alarm continues to sound until you press the “DONE/RETURN” key or until the screen time-out expires.

Default Setting: Mid Range (7)

Accepted Range: 0 - 15

Procedure:

[1] From the Walk-Up Menu, press the “GO TO SETUP” key.

STD READY				
DRYER TEMP	SLEEP	SELECT CYCLE	MORE	GO TO SETUP

[2] Enter the 4-digit access code.

1	2	3	4	CANCEL REQUEST

[3] Press the “MORE” key.

▲	▼	CHEM/ CYCLE	MORE	DONE/ RETURN

[4] Press the “OPTIONS” key.

INFO	SETUP	OPTIONS		DONE/ RETURN

[5] Press the “MORE” key.

REPLEN MODE	DAILY STARTUP	DISPLAY UNITS	MORE	DONE/ RETURN

[6] Press the “MORE” key.

ACCESS CODE	USER ACCESS	TEMP LOCK	MORE	DONE/ RETURN

[7] Press the “MORE” key.

STANDBY MODE	ROLLER JOG	COOL DOWN	MORE	DONE/ RETURN

[8] Press the “ALARM VOLUME” key.

RECPT MODE	ALARM VOLUME		MORE	DONE/ RETURN

[9] To change the volume of the alarm, press the appropriate key:

- [▲] key **to increase** the volume
- [▼] key **to decrease** the volume

10 = ALARM VOLUME				
▲	▼			DONE/ RETURN

[10] Press the “DONE/RETURN” key repeatedly until you return to the display shown below. Then press the “YES” key to return to the Walk-Up Menu.

EXIT SETUP?				
YES				CANCEL REQUEST

Selecting Temperature Lockout Mode

Description:

Turning Temperature Lockout ON automatically disables the transport system whenever the developer temperature deviates from the specified temperature range. The transport system remains disabled until the temperature of the developer is back within the specified temperature tolerance of ± 0.3°C (0.5°F) of the setpoint.

Turning temperature Lockout OFF allows the Processor to accept film even when the developer temperature deviates from the specified temperature range.

Default Setting: Off

Important

When using accessory equipment, the “Temperature Lockout” must be “OFF” to prevent the accessory equipment from attempting to feed films with the transport off.

Procedure:

[1] From the Walk-Up Menu, press the “GO TO SETUP” key.

STD READY				
DRYER TEMP	SLEEP	SELECT CYCLE	MORE	GO TO SETUP

[2] Enter the 4-digit access code.

1	2	3	4	CANCEL REQUEST

[3] Press the “MORE” key.

▲	▼	CHEM/ CYCLE	MORE	DONE/ RETURN

[4] Press the “OPTIONS” key.

INFO	SETUP	OPTIONS		DONE/ RETURN

[5] Press the “MORE” key.

REPLEN MODE	DAILY STARTUP	DISPLAY UNITS	MORE	DONE/ RETURN

[6] Press the “TEMP LOCK” key.

ACCESS CODE	USER ACCESS	TEMP LOCK	MORE	DONE/ RETURN

[7] Press the “ON or OFF” key.

TEMPERATURE LOCKOUT IS ON				
ON	OFF			DONE/ RETURN

[8] Press the “DONE/RETURN” key repeatedly until you return to the display shown below. Then press the “YES” key to return to the Walk-Up Menu.

EXIT SETUP?				
YES				CANCEL REQUEST

Selecting Display Units

Description:

The software of the Processor allows you to choose either degrees Fahrenheit (°F) or degrees Celsius (°C) for temperature units, and either English or Metric units for measuring length.

Default Setting: °F and in./min

Procedure:

[1] From the Walk-Up Menu, press the “GO TO SETUP” key.

READY				STD
DRYER TEMP	SLEEP	SELECT CYCLE	MORE	GO TO SETUP

[2] Enter the 4-digit access code.

1	2	3	4	CANCEL REQUEST

[3] Press the “MORE” key.

▲	▼	CHEM/ CYCLE	MORE	DONE/ RETURN

[4] Press the “OPTIONS” key.

INFO	SETUP	OPTIONS		DONE/ RETURN

[5] Press the “DISPLAY UNITS” key.

REPLEN MODE	DAILY SETUP	DISPLAY UNITS	MORE	DONE/ RETURN

[6] Press either key:

- “ENGLISH” for °F and in./min or
- “METRIC” for °C and cm/min

UNITS ARE ENGLISH				
ENGLISH	METRIC			DONE/ RETURN

[7] Press the “DONE/RETURN” key repeatedly until you return to the display shown below. Then press the “YES” key to return to the Walk-Up Menu.

EXIT SETUP?				
YES				CANCEL REQUEST

Selecting the Receptacle Mode

Description:

The Safelight Receptacle, which is located on the Feed End Panel (see Figure 2 on Page 6), can be set to one of two modes:

- Safelight - receptacle power is on except when film is in the entrance area of the Processor. Power is again returned after the trail edge of film has traveled 76 mm (3 in.) beyond the Film Accumulator.
- Accessory - receptacle power is always on.

Default Setting: Safelight Mode

Procedure:

[1] From the Walk-Up Menu, press the “GO TO SETUP” key.

READY				STD
DRYER TEMP	SLEEP	SELECT CYCLE	MORE	GO TO SETUP

[2] Enter the 4-digit access code.

1	2	3	4	CANCEL REQUEST

[3] Press the “MORE” key.

▲	▼	CHEM/ CYCLE	MORE	DONE/ RETURN

[4] Press the “OPTIONS” key.

INFO	SETUP	OPTIONS		DONE/ RETURN

[5] Press the “MORE” key.

REPLEN MODE	DAILY SETUP	DISPLAY UNITS	MORE	DONE/ RETURN

[6] Press the “MORE” key.

ACCESS CODE	USER ACCESS	TEMP LOCK	MORE	DONE/ RETURN

[7] Press the “MORE” key.

STANDBY MODE	ROLLER JOG	COOL DOWN	MORE	DONE/ RETURN

[8] Press the “RECEPT MODE” key.

RECEPT MODE	ALARM VOLUME	CYCLE DEFAULT	MORE	DONE/ RETURN

[9] Press either key:

- “SAFE” key for the Safelight mode or
- “ACCY” key for the Accessory mode

RECEPTACLE MODE IS SAFELIGHT				
SAFE	ACCY			DONE/ RETURN

[10] Press the “DONE/RETURN” key repeatedly until you return to the display shown below. Then press the “YES” key to return to the Walk-Up Menu.

EXIT SETUP?				
YES				CANCEL REQUEST

Selecting the Display Language

Description:

The Processor displays messages in 12 different languages:

Danish	Italian
Dutch	Japanese
English	Norwegian
Finnish	Portuguese
French	Spanish
German	Swedish

Default Setting: English

Procedure:

[1] From the Walk-Up Menu, press the “GO TO SETUP” key.

STD READY				
DRYER TEMP	SLEEP	SELECT CYCLE	MORE	GO TO SETUP

[2] Enter the 4-digit access code.

1	2	3	4	CANCEL REQUEST

[3] Press the “MORE” key.

▲	▼	CHEM/ CYCLE	MORE	DONE/ RETURN

[4] Press the “OPTIONS” key.

INFO	SETUP	OPTIONS		DONE/ RETURN

[5] Press the “MORE” key.

REPLEN MODE	DAILY STARTUP	DISPLAY UNITS	MORE	DONE/ RETURN

[6] Press the “MORE” key.

ACCESS CODE	USER ACCESS	TEMP LOCK	MORE	DONE/ RETURN

[7] Press the “MORE” key.

STANDBY MODE	ROLLER JOG	COOL DOWN	MORE	DONE/ RETURN

[8] Press the “MORE” key.

RECPT MODE	ALARM VOLUME		MORE	DONE/ RETURN

[9] Press the “LANG” key.

LANG			MORE	DONE/ RETURN

[10] Press the appropriate key to select the display language.

LANGUAGE IS ENGLISH				
ENGLISH	FRENCH	GERMAN	MORE	DONE/ RETURN

SPANISH	SWEDISH	NORWEG	MORE	DONE/ RETURN

DANISH	DUTCH	ITALIAN	MORE	DONE/ RETURN

PORTU	FINNISH	JAPAN	MORE	DONE/ RETURN

[11] Press the “DONE/RETURN” key repeatedly until you return to the display shown below. Then press the “YES” key to return to the Walk-Up Menu.

EXIT SETUP?				
YES				CANCEL REQUEST

Section 3: Advanced Setup Options

Setting the Developer and Fixer Setpoint Temperatures

Description:

Developer and fixer setpoint temperatures can be modified and stored for future use. Setpoints that were preset at the factory always can be restored by pressing the “DEFAULT SETTING” key in Step 10.

Default Developer Setting: Varies with Cycle Selected

Default Fixer Setting: Varies with Cycle Selected

Procedure:

[1] From the Walk-Up Menu, press the “GO TO SETUP” key.

STD READY				
DRYER TEMP	SLEEP	SELECT CYCLE	MORE	GO TO SETUP

[2] Enter the 4-digit access code.

1	2	3	4	CANCEL REQUEST

[3] Press the “MORE” key.

▲	▼	CHEM/ CYCLE	MORE	DONE/ RETURN

[4] Press the “SETUP” key.

INFO	SETUP	OPTIONS		DONE/ RETURN

[5] Press the “PROCESS” key.

PROCESS	CLOCK	AUTO STARTUP	PUMP CALIB	DONE/ RETURN

[6] Press the key for the current film processing chemicals.

PRESS BUTTON TO SELECT				
RP	RA			DONE/ RETURN

[7] One of the following 2 screens will appear. Press the key for the desired film processing cycle.

PRESS BUTTON TO SELECT				
RAPID CYCLE	STD CYCLE	EXTD CYCLE		DONE/ RETURN

PRESS BUTTON TO SELECT				
K/RA CYCLE				DONE/ RETURN

[8] Press the “TEMP” key.

TEMP	REPLEN VOLUME	SPEED		DONE/ RETURN

[9] Press either key:

- the “DEV TEMP” key to change the developer setpoint temperature
- the “FIX TEMP” key to change the fixer setpoint temperature

DEV TEMP	FIX TEMP			DONE/ RETURN

[10] To change the setpoint temperature, press the appropriate key:

- [▲] key **to increase** the setpoint temperature
- [▼] key **to decrease** the setpoint temperature
- [DEFAULT SETTING] to return to the default setpoint temperature
- [CANCEL REQUEST] to cancel the procedure

95.0 F = DEVELOPER SETPOINT				STD
▲	▼	DEFAULT SETTING	CANCEL REQUEST	DONE/ RETURN

[11] Do Steps 9 and 10 for the fixer (or the developer) solution.

[12] Press the “DONE/RETURN” key repeatedly until you return to the display shown below. Then press the “YES” key to return to the Walk-Up Menu.

EXIT SETUP?				
YES				CANCEL REQUEST

Note

The setpoint temperature for the fixer solution is a minimum only; the temperature may rise above this setpoint.

Displaying the Fixer Temperature

Description:

If you wish to determine the temperature of the fixer solution, simply press the “DISPLAY FIX TEMP” key on the Display Panel. The temperature reading will then be displayed for the fixer solution.

Note

The setpoint temperature for the fixer solution is a minimum only; the temperature may rise above this setpoint.

Procedure:

[1] From the Walk-Up Menu, press the “MORE” key.

STD READY				
DRYER TEMP	SLEEP	SELECT CYCLE	MORE	GO TO SETUP

[2] Press the “DISPLAY FIX TEMP” key.

DISPLAY FIX TMP	TIME/DATE			DONE/ RETURN

[3] Press the “DONE/RETURN” key repeatedly until you return to the Walk-Up Menu.

Setting the Developer and Fixer Replenishment Volumes

Description:

Default Developer Setting: Varies with the Type of Replenishment Selected (Automatic or Flooded)

Default Fixer Setting: Varies with the Type of Replenishment Selected (Automatic or Flooded)

If it is necessary to change the replenishment volumes from the factory default settings, follow the procedure outlined below.

Procedure:

[1] From the Walk-Up Menu, press the “GO TO SETUP” key.

READY				STD
DRYER TEMP	SLEEP	SELECT CYCLE	MORE	GO TO SETUP

[2] Enter the 4-digit access code.

1	2	3	4	CANCEL REQUEST

[3] Press the “MORE” key.

▲	▼	CHEM/ CYCLE	MORE	DONE/ RETURN

[4] Press the “SETUP” key.

INFO	SETUP	OPTIONS		DONE/ RETURN

[5] Press the “PROCESS” key.

PROCESS	CLOCK	AUTO STARTUP	PUMP CALIB	DONE/ RETURN

[6] Press the appropriate key for the desired chemicals.

PRESS BUTTON TO SELECT				
RP	RA			DONE/ RETURN

[7] One of the following 2 screens will appear. Press the key for the desired film processing cycle.

PRESS BUTTON TO SELECT				
RAPID CYCLE	STD CYCLE	EXTD CYCLE		DONE/ RETURN

PRESS BUTTON TO SELECT				
K/RA CYCLE				DONE/ RETURN

[8] Press the “REPLEN VOLUME” key.

STD PRESS BUTTON TO SELECT				
TEMP	REPLEN VOLUME	SPEED		DONE/ RETURN

[9] Press the “DEV or FIX REP VOLUME” key.

STD PRESS BUTTON TO SELECT				
DEV REP VOLUME	FIX REP VOLUME			DONE/ RETURN

[10] Press the appropriate key to change the replenishment volume:

- [▲] key **to increase** the volume
- [▼] key **to decrease** the volume
- [DEFAULT SETTING] to return to the default volume
- [CANCEL REQUEST] to cancel the procedure

60 mL = FIXER REPLENISHMENT VOLUME				
▲	▼	DEFAULT SETTING	CANCEL REQUEST	DONE/ RETURN

[11] Press the “DONE/RETURN” key repeatedly until you return to the display shown below. Then press the “YES” key to return to the Walk-Up Menu.

EXIT SETUP?				
YES				CANCEL REQUEST

Verifying the Replenishment Rates

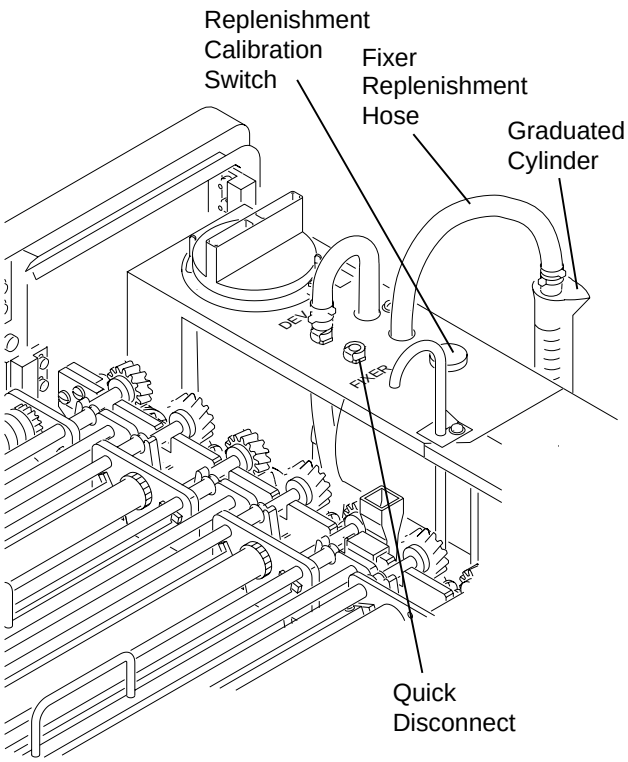

H148_0112GCA
H148_0112GA

[1] Remove the Top Cover of the Processor.

[2] Insert the end of the Developer (or Fixer) Replenishment Hose into a Graduated Cylinder.

[3] Hold the Graduated Cylinder outside of the Processor so spills will not contaminate the processing solutions.

[4] Press and hold for 5 seconds the Replenishment Calibration Switch locatednext to the Replenishment Hoses. See the figure.

[5] Allow the Replenishment Pumps to turn on and deliver the preset volume of replenishment solution.

[6] Compare the volume of replenishment solution delivered into the Graduated Cylinder to the replenishment volume you set in the previous procedure. If the 2 volumes are not within 10% of each other, do the “Calibrating the Replenishment System” procedure on Page 26.

Setting the Transport Speed

Description:

Default Setting and Accepted Range: Vary with the Cycle Selected

If it is necessary to change the default setting, follow the procedure outlined below.

Procedure:

[1] From the Walk-Up Menu, press the “GO TO SETUP” key.

READY				STD
DRYER TEMP	SLEEP	SELECT CYCLE	MORE	GO TO SETUP

[2] Enter the 4-digit access code.

1	2	3	4	CANCEL REQUEST

[3] Press the “MORE” key.

▲	▼	CHEM/ CYCLE	MORE	DONE/ RETURN

[4] Press the “SETUP” key.

INFO	SETUP	OPTIONS		DONE/ RETURN

[5] Press the “PROCESS” key.

PROCESS	CLOCK	AUTO STARTUP	PUMP CALIB	DONE/ RETURN

[6] Press the appropriate key for the desired chemicals.

RP	RA			DONE/ RETURN

[7] One of the following 2 screens will appear. Press the key for the desired film processing cycle.

PRESS BUTTON TO SELECT				
RAPID CYCLE	STD CYCLE	EXTD CYCLE		DONE/ RETURN

PRESS BUTTON TO SELECT				
K/RA CYCLE				DONE/ RETURN

[8] Press the “SPEED” key.

TEMP	REPLEN VOLUME	SPEED		DONE/ RETURN

[9] Press the appropriate key to change the transport speed:

- [▲] key **to increase** the speed
- [▼] key **to decrease** the speed
- [DEFAULT SETTING] to return to the default speed
- [CANCEL REQUEST] to cancel the procedure

45 IN/MIN = SPEED SETPOINT				
▲	▼	DEFAULTS ETTING	CANCEL REQUEST	DONE/ RETURN

[10] Press the “DONE/RETURN” key repeatedly until you return to the display shown below. Then press the “YES” key to return to the Walk-Up Menu.

EXIT SETUP?				
YES				CANCEL REQUEST

Setting the Automatic On and Off Timers

Description:

The Processor software provides programmable timers for programming 2 distinct on and off times for the Processor each day. The Automatic Timers allow you to specify a start time for the Processor to energize automatically so that the processing solutions and the Dryer will have reached their setpoint temperatures before you arrive at the work site. The Processor can store up to 2 “start times” and 2 “off times” for each day of the week to coincide with changing shifts or with weekend schedules.

Example of Use: For instance, if you want the Processor to be warmed up and ready to accept films by the time you arrive at work in the morning, you may set Timer1 to turn on the Processor at 6:00 a.m. If you operate during 2 distinct shifts and there is a large lapse in time between the 2 shifts, you might want to set Timer1 to turn off the Processor at the end of the first shift and set Timer2 to turn on the Processor again an hour before the second shift starts for the afternoon. And finally, you might want to set Timer2 to turn off the Processor for the night at the end of the second shift.

Important

When you are setting the Timers, if the current time is later than the programmed “off time”, the Processor will not automatically turn itself off until that time the following day.

You will have to manually turn off the Processor for the current day. For example:
If it is currently 4:00 p.m. and you have programmed the “off time” for 3:00 p.m., you must manually turn off the Processor.

Do not set the On and Off Timers within 15 minutes of each other. To ensure the correct operation of the Processor, the Processor must remain on for at least 15 minutes before the Automatic Off Timer turns it off. Likewise, the Processor must remain off for at least 15 minutes before the Automatic On Timer turns it on.

Procedure for Setting Timer1 Initially

Beginning the Procedure

Note

If the Timers are already set and you wish to change the on and off times, follow the procedure on Page 54.

Before proceeding with the steps below, be sure that you have completed the procedure for setting the time and date on Page 23.

If you are reading through the steps below to become familiar with the procedure and are not actually setting the timers, the screens that you see displayed may be different from the sample screens shown in this procedure.

[1] From the Walk-Up Menu, press the “GO TO SETUP” key.

STD READY				
DRYER TEMP	SLEEP	SELECT CYCLE	MORE	GO TO SETUP

[2] Enter the 4-digit access code.

1	2	3	4	CANCEL REQUEST

[3] Press the “MORE” key.

▲	▼	CHEM/ CYCLE	MORE	DONE/ RETURN

[4] Press the “SETUP” key.

INFO	SETUP	OPTIONS		DONE/ RETURN

[5] Press the “AUTO STARTUP” key.

PROCESS	CLOCK	AUTO STARTUP	PUMP CALIB	DONE/ RETURN

[6] If you have already set the clock, continue with Step 7. If you have not yet set the time and date, the display below will appear. Do the procedure on Page 23 before continuing with this procedure.

CLOCK MUST BE SET BEFORE CONTINUING				
				DONE/ RETURN

[7] Press the “ON” key.

AUTO STARTUP IS OFF				
	ON	OFF		DONE/ RETURN

[8] Press the “SET TIMERS” key.

AUTO STARTUP IS ON				
SET TIMERS	ON	OFF		DONE/ RETURN

Setting the On Time:

[9] Press the“TIMER1 CONTROL” key.

PRESS BUTTON TO SET UP FOR MONDAY				
TIMER1 CONTROL		COPY PREV	NEXT DAY	DONE/ RETURN

[10] Press the “ON” key.

SET UP TIMER1 FOR MONDAY				
		ON	OFF	DONE/ RETURN

[11] Press the “ON TIME” key.

SET UP TIMER1 FOR MONDAY				
ON TIME		ON	OFF	DONE/ RETURN

[12] Use the up and down arrow keys to select the hour and minute when you want the Processor to turn on.

6:00 AM = CURRENT ON TIME				
▲ HOUR	▼ HOUR	▲ MINUTE	▼ MINUTE	DONE/ RETURN

[13] Press the “DONE/RETURN” key to return to the menu options shown below.

SET UP TIMER1 FOR MONDAY				
ON TIME	OFF TIME	ON	OFF	DONE/ RETURN

Setting the Off Time:

Note

Any time the screen shown below appears on the Display Panel, you can press the “OFF” key to erase the last programmed on and off times for Timer1 and Timer2.

[14] Press the “OFF TIME” key.

SET UP TIMER1 FOR MONDAY				
ON TIME	OFF TIME	ON	OFF	DONE/ RETURN

[15] Use the up and down arrow keys to select the hour and minute when you want the Processor to turn off.

11:00 AM = CURRENT OFF TIME				
▲ HOUR	▼ HOUR	▲ MINUTE	▼ MINUTE	DONE/ RETURN

[16] Press the “DONE/RETURN” key repeatedly until you return to the menu options shown below.

PRESS BUTTON TO SET UP FOR MONDAY				
TIMER1 CONTROL	TIMER2 CONTROL	COPY PREV	NEXT DAY	DONE/ RETURN

Procedure for Setting Timer2 Initially

[1] Press the “TIMER2 CONTROL” key.

PRESS BUTTON TO SET UP FOR MONDAY				
TIMER1 CONTROL	TIMER2 CONTROL	COPY PREV	NEXT DAY	DONE/ RETURN

[2] Repeat Steps 10 through 16 starting on Page 50 to set the on and off times for Timer2. Then set the on and off times for the remaining days of the week by completing the steps on the next page.

Procedure for Setting the On and Off Timers for the Remaining Days of the Week

Introduction

If the hours that you would like to operate the Processor on the other days of the week are the same hours as those you set for Monday, follow Steps 1 through 3 below.

If you do not want to repeat Monday’s on and off times for the other days of the week, follow Steps 4 through 13.

Copying On and Off Timer Settings:

[1] Press the “NEXT DAY” key to advance the display to show Tuesday.

PRESS BUTTON TO SET UP FOR MONDAY				
TIMER1 CONTROL	TIMER2 CONTROL	COPY PREV	NEXT DAY	DONE/ RETURN

[2] Press the “COPY PREV” key. You will hear a beep when you press the “COPY PREV” key.

PRESS BUTTON TO SET UP FOR TUESDAY				
TIMER1 CONTROL		COPY PREV	NEXT DAY	DONE/ RETURN

[3] Repeat the entire process to set the Automatic Timers for the remaining days of the week.

Setting Different On and Off Times for the Remaining Days:

If you want to select different on and off times for Timer1 and Timer2 than those you set for Monday, do the steps below.

[4] Press the “NEXT DAY” key to advance the display to show Tuesday.

PRESS BUTTON TO SET UP FOR MONDAY				
TIMER1 CONTROL		COPY PREV	NEXT DAY	DONE/ RETURN

[5] Press the “TIMER1 CONTROL” key.

PRESS BUTTON TO SET UP FOR TUESDAY				
TIMER1 CONTROL		COPY PREV	NEXT DAY	DONE/ RETURN

[6] Press the “ON” key to enable Timer1.

SET UP TIMER1 FOR MONDAY				
		ON	OFF	DONE/ RETURN

[7] Press the “ON TIME” key.

SET UP TIMER1 FOR TUESDAY				
ON TIME		ON	OFF	DONE/ RETURN

[8] Use the up and down arrow keys to select the hour and minute when you want the Processor to turn on.

2:00 PM = CURRENT ON TIME				
▲ HOUR	▼ HOUR	▲ MINUTE	▼ MINUTE	DONE/ RETURN

[9] Press the “DONE/RETURN” key until you return to the menu options shown below.
Press the “OFF TIME” key.

SET UP TIMER1 FOR TUESDAY				
ON TIME	OFF TIME	ON	OFF	DONE/ RETURN

[10] Use the up and down arrow keys to select the hour and minute when you want the Processor to turn off.

11:00 PM = CURRENT OFF TIME				
▲ HOUR	▼ HOUR	▲ MINUTE	▼ MINUTE	DONE/ RETURN

[11] Press the “DONE/RETURN” key twice to return to the menu options displayed below.
Press the “TIMER2 CONTROL” key.

PRESS BUTTON TO SET UP FOR TUESDAY				
TIMER1 CONTROL	TIMER2 CONTROL	COPY PREV	NEXT DAY	DONE/ RETURN

[12] Repeat Steps 7 through 11 to set the on and off time settings for Timer2.

[13] Repeat the entire process to set the Automatic Timers for the remaining days of the week.

Changing the On and Off Timer Settings

Note

If you are setting the On and Off Timer Settings for the very first time, follow the procedure on Page 49.

[1] From the Walk-Up Menu, press the “GO TO SETUP” key.

STD				
READY				
DRYER TEMP	SLEEP	SELECT CYCLE	MORE	GO TO SETUP

[2] Enter the 4-digit access code.

1	2	3	4	CANCEL REQUEST

[3] Press the “MORE” key.

▲	▼	CHEM/ CYCLE	MORE	DONE/ RETURN

[4] Press the “SETUP” key.

INFO	SETUP	OPTIONS		DONE/ RETURN

[5] Press the “AUTO STARTUP” key.

PROCESS	CLOCK	AUTO STARTUP	PUMP CALIB	DONE/ RETURN

[6] Press the “SET TIMERS” key.

AUTO STARTUP IS ON				
SET TIMERS	ON	OFF		DONE/ RETURN

[7] Press either the “TIMER1 CONTROL” or “TIMER2 CONTROL” key.

PRESS BUTTON TO SET UP FOR MONDAY				
TIMER1 CONTROL	TIMER2 CONTROL	COPY PREV	NEXT DAY	DONE/ RETURN

[8] Press either the “ON TIME” or the “OFF TIME” key.

SET UP TIMER1 FOR MONDAY				
ON TIME	OFF TIME	ON	OFF	DONE/ RETURN

[9] Use the up and down arrow keys to select the new time that you want to program.

6:00 AM = CURRENT ON TIME				
▲ HOUR	▼ HOUR	▲ MINUTE	▼ MINUTE	DONE/ RETURN

[10] Continue changing the programmed on and off times for Timer1 and Timer2 by pressing the “DONE/RETURN” key repeatedly until you return to the appropriate menu.

SET UP TIMER1 FOR MONDAY				
ON TIME	OFF TIME	ON	OFF	DONE/ RETURN

Note

Any time the screen shown above appears on the Display Panel, you can press the “OFF” key to erase the last programmed on and off times for Timer1 and Timer2.

[11] When you are through changing the on and off times, press the “DONE/RETURN” key repeatedly until you return to the display shown below. Then press the “YES” key to return to the Walk-Up Menu.

EXIT SETUP?				
YES				CANCEL REQUEST

Selecting the Start-Up Option

Description:

Selecting the Daily Start-Up option allows you to temporarily disable the Automatic Start-Up feature of Sleep mode. This feature provides you with a convenient, easy way to leave the Processor in Sleep mode for several days without needing to re-program the daily on and off timers.

Procedure:

[1] From the Walk-Up Menu, press the “GO TO SETUP” key.

STD READY				
DRYER TEMP	SLEEP	SELECT CYCLE	MORE	GO TO SETUP

[2] Enter the 4-digit access code.

1	2	3	4	CANCEL REQUEST

[3] Press the “MORE” key.

▲	▼	CHEM/ CYCLE	MORE	DONE/ RETURN

[4] Press the “OPTIONS” key.

INFO	SETUP	OPTIONS		DONE/ RETURN

[5] Press the “DAILY STARTUP” key.

REPLEN MODE	DAILY STARTUP	DISPLAY UNITS	MORE	DONE/ RETURN

[6] Press the appropriate keys to select the day for which you wish to turn on or turn off the Automatic Start-Up feature.

TUESDAY DAILY STARTUP ON				
PREV DAY	NEXT DAY	ON	OFF	DONE/ RETURN

[7] Press the “DONE/RETURN” key repeatedly until you return to the display shown below. Then press the “YES” key to return to the Walk-Up Menu.

EXIT SETUP?				
YES				CANCEL REQUEST

Entering and Exiting Sleep Mode

Description:

Figure 10

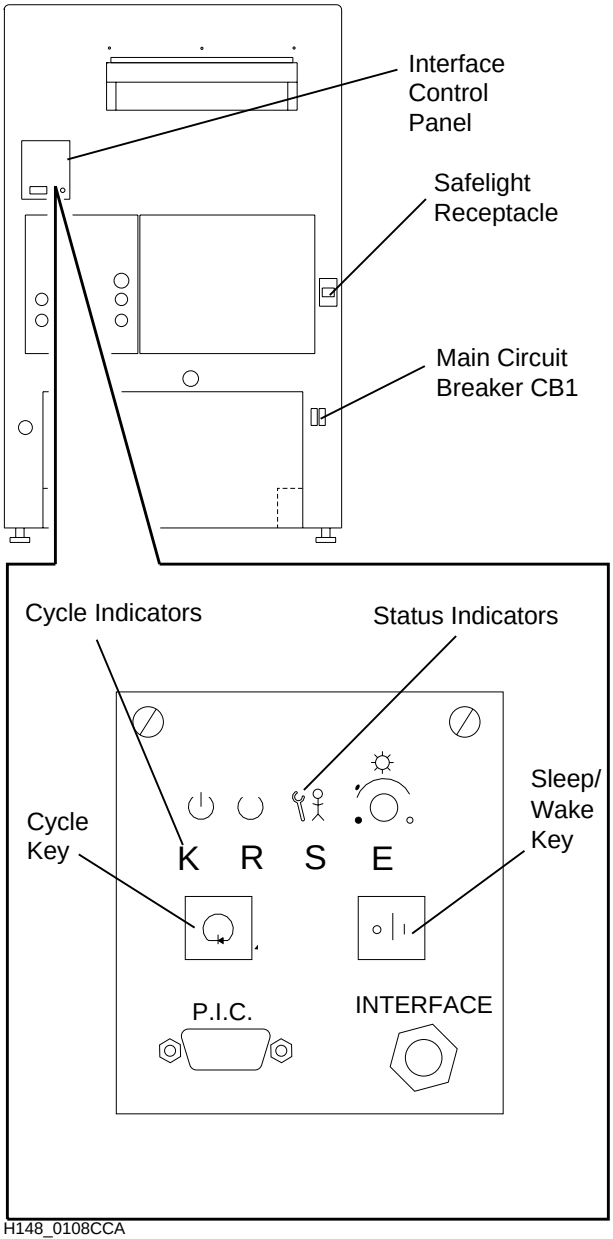

H148_0108CCA
H148_0108CA

When the Processor is in Sleep mode, the Processor appears to be “off,” but the microprocessor remains active. Depending upon the configuration of other options, the components listed below remain off while the Processor is in Sleep mode:

- Heaters
- Motors
- Solenoids

While the Processor is in the Sleep mode, you cannot feed films or access any of the Processor setup screens.

You can manually place the Processor in or out of Sleep mode in either of 2 ways:

- Simply use the Key located on the feed end of the Processor.
- Or, use the Soft Keys on the Display Panel to place the Processor into or out of Sleep Mode.

Note

To fully utilize the Sleep Mode, the Cool Down, and the Roller Jog features, you must:

1. Leave the main Circuit Breaker CB1 and the wall Power Switch in the “ON” positions.
2. Leave the water supply on.
3. Leave the Top Cover closed.

Procedure for Entering Sleep Mode:

[1] From the Walk-Up Menu, press the “Sleep” key.

STD READY				
DRYER TEMP	SLEEP	SELECT CYCLE	MORE	GO TO SETUP

[2] Press the “YES” key to place the Processor in Sleep mode or the “CANCEL REQUEST” key to quit.

ARE YOU SURE?				
YES				CANCEL REQUEST

[3] If you have programmed the Automatic On and Off Timers under the “AUTO STARTUP” menu, the screen below will be displayed when the Processor enters Sleep mode. The screen remains displayed until the Automatic Timer turns on or until you press the “WAKE” key.

7:30 AM MONDAY = NEXT ON TIME				
				WAKE

If you have not programmed the Automatic On and Off Timers, the Processor will display the message “PROCESSOR IN SLEEP MODE.”

If you have entered Sleep mode by pressing the Switch on the feed end of the Processor, and you have not programmed the Automatic Timers, the Processor will also display the message “PROCESSOR IN SLEEP MODE.”

Procedure for Exiting Sleep Mode:

There are 3 ways to take the Processor out of Sleep mode:

[1] If you have programmed the Automatic On and Off Start-Up Timers, you can allow the pre-programmed On Timer to return the Processor to normal operating condition at the specified time.

7:30 AM MONDAY = NEXT ON TIME				
				WAKE

[2] Press the “WAKE” key on the Display Panel.

[3] Press the “SLEEP/WAKE” key on the feed end of the Processor.

Selecting Sleep Mode Options

Description:

You can choose how the Sleep mode feature operates by selecting or not selecting the **Roller Jog** and the **Cool Down** options and by setting the values of the On and Off Timers for the **Auto Start-Up** option.

The selection of the **Roller Jog** feature reduces chemical buildup on the Rack and Crossover Rollers. When the Roller Jog feature is selected, both the transport Motor and wash water activate periodically (for 90 seconds every 30 minutes) supplying the Crossover Fill Troughs with water. Therefore, it is recommended that you select the Roller Jog option when operating the Processor in Sleep mode.

The selection of the **Cool Down** feature prevents the condensation of processing solutions by leaving the exhaust Blower on for 3 hours or until the fixer temperature goes below 27˚C (80˚F). The transport and Recirculation Pump turn on for 90 seconds every 10 minutes during the cool down period. The wash water turns on when the transport is on for the first time and then every fourth time thereafter.

Therefore, the Cool Down feature, like the Roller Jog feature, reduces the buildup of chemicals on the Rack and Crossover Rollers. It is recommended that you also select the Cool Down option when operating the Processor in Sleep mode.

Default Settings: Roller Jog - Off
Cool Down - Off

Procedure for Turning On or Off the Roller Jog Option:

[1] From the Walk-Up Menu, press the “GO TO SETUP” key.

STD READY				
DRYER TEMP	SLEEP	SELECT CYCLE	MORE	GO TO SETUP

[2] Enter the 4-digit access code.

1	2	3	4	CANCEL REQUEST

[3] Press the “MORE” key.

▲	▼	CHEM/ CYCLE	MORE	DONE/ RETURN

[4] Press the “OPTIONS” key.

INFO	SETUP	OPTIONS		DONE/ RETURN

[5] Press the “MORE” key.

REPLEN MODE	DAILY STARTUP	DISPLAY UNITS	MORE	DONE/ RETURN

[6] Press the “MORE” key.

ACCESS CODE	USER ACCESS	TEMP LOCK	MORE	DONE/ RETURN

[7] Press the “ROLLER JOG” key.

STANDBY MODE	ROLLER JOG	COOL DOWN	MORE	DONE/ RETURN

[8] Press either key:

- the “ON” key to enable the Roller Jog option
- the “OFF” key to disable the Roller Jog option

ON	OFF			DONE/ RETURN

[9] Press the “DONE/RETURN” key repeatedly until you return to the display shown below. Then press the “YES” key to return to the Walk-Up Menu.

EXIT SETUP?				
YES				CANCEL REQUEST

Procedure for Turning On or Off the Cool Down Option:

[1] From the Walk-Up Menu, press the “GO TO SETUP” key.

STD READY				
DRYER TEMP	SLEEP	SELECT CYCLE	MORE	GO TO SETUP

[2] Enter the 4-digit access code.

1	2	3	4	CANCEL REQUEST

[3] Press the “MORE” key.

▲	▼	CHEM/ CYCLE	MORE	DONE/ RETURN

[4] Press the “OPTIONS” key.

INFO	SETUP	OPTIONS		DONE/ RETURN

[5] Press the “MORE” key.

REPLEN MODE	DAILY STARTUP	DISPLAY UNITS	MORE	DONE/ RETURN

[6] Press the “MORE” key.

ACCESS CODE	USER ACCESS	TEMP LOCK	MORE	DONE/ RETURN

[7] Press the “COOL DOWN” key.

STANDBY MODE	ROLLER JOG	COOL DOWN	MORE	DONE/ RETURN

[8] Press either key:

- the “ON” key to enable the Cool Down option
- the “OFF” key to disable the Cool Down option

COOL DOWN IS ON				
ON	OFF			DONE/ RETURN

[9] Press the “DONE/RETURN” key repeatedly until you return to the display shown below. Then press the “YES” key to return to the Walk-Up Menu.

EXIT SETUP?				
YES				CANCEL REQUEST

Usage Information

Obtaining the Developer Usage Volume

Description:

This procedure provides you with the total volume of developer used to fill the Processing Tank and to replenish the developer since the screen was last reset.

Procedure:

[1] From the Walk-Up Menu, press the “GO TO SETUP” key.

READY				STD
DRYER TEMP	SLEEP	SELECT CYCLE	MORE	GO TO SETUP

[2] Enter the 4-digit access code.

1	2	3	4	CANCEL REQUEST

[3] Press the “MORE” key.

▲	▼	CHEM/ CYCLE	MORE	DONE/ RETURN

[4] Press the “INFO” key.

INFO	SETUP	OPTIONS		DONE/ RETURN

[5] Press the “USAGE” key.

USAGE	DIAG	SW VERSION	MORE	DONE/ RETURN

[6] Press the “DEV USAGE” key. The current volume of developer used and the date that the accumulation began will appear on the Display Screen.

DEV USAGE	FIXER USAGE	FILM USAGE	SETUP GROUPS	DONE/ RETURN

[7] Press the “DONE/RETURN” key repeatedly until you return to the display shown below. Then press the “YES” key to return to the Walk-Up Menu.

EXIT SETUP?				
YES				CANCEL REQUEST

Obtaining the Developer Usage Rate

Description:

This procedure provides you with the average volume of developer used to replenish a single sheet of film processed.

Procedure:

[1] From the Walk-Up Menu, press the “GO TO SETUP” key.

READY				STD
DRYER TEMP	SLEEP	SELECT CYCLE	MORE	GO TO SETUP

[2] Enter the 4-digit access code.

1	2	3	4	CANCEL REQUEST

[3] Press the “MORE” key.

▲	▼	CHEM/ CYCLE	MORE	DONE/ RETURN

[4] Press the “INFO” key.

INFO	SETUP	OPTIONS		DONE/ RETURN

[5] Press the “USAGE” key.

USAGE	DIAG	SW VERSION	MORE	DONE/ RETURN

[6] Press the “DEV USAGE” key.

DEV USAGE	FIXER USAGE	FILM USAGE	SETUP GROUPS	DONE/ RETURN

[7] Press the “USAGE RATE” key. The average volume of developer replenishment used per single sheet of film processed will appear on the Display Screen.

CLEAR USAGE	USAGE RATE			DONE/ RETURN

To clear the developer rate information, do the steps below.

[8] Press the “CLEAR USAGE” key to clear both the total volume usage and the usage rate.

CLEAR USAGE	USAGE RATE			DONE/ RETURN

[9] When prompted, “ARE YOU SURE?” press the appropriate key:

- the “YES” key to clear the developer usage information and reset it to zero.
- the “CANCEL REQUEST” to continue recording the developer usage volume without resetting the volume to zero.

[10] Press the “DONE/RETURN” key repeatedly until you return to the display shown below. Then press the “YES” key to return to the Walk-Up Menu.

EXIT SETUP?				
YES				CANCEL REQUEST

Obtaining the Fixer Usage Volume

Description:

This procedure provides you with the total volume of fixer used to fill the Processing Tank and to replenish the fixer since the counter was last reset.

Procedure:

[1] From the Walk-Up Menu, press the “GO TO SETUP” key.

STD READY				
DRYER TEMP	SLEEP	SELECT CYCLE	MORE	GO TO SETUP

[2] Enter the 4-digit access code.

1	2	3	4	CANCEL REQUEST

[3] Press the “MORE” key.

▲	▼	CHEM/ CYCLE	MORE	DONE/ RETURN

[4] Press the “INFO” key.

INFO	SETUP	OPTIONS		DONE/ RETURN

[5] Press the “USAGE” key.

USAGE	DIAG	SW VERSION	MORE	DONE/ RETURN

[6] Press the “FIXER USAGE” key. The current volume of fixer used and the date that the accumulation began will appear on the Display Screen.

DEV USAGE	FIXER USAGE	FILM USAGE	SETUP GROUPS	DONE/ RETURN

[7] Press the “DONE/RETURN” key repeatedly until you return to the display shown below. Then press the “YES” key to return to the Walk-Up Menu.

EXIT SETUP?				
YES				CANCEL REQUEST

Obtaining the Fixer Usage Rate

Description:

This procedure provides you with the average volume of fixer used to replenish a single sheet of film processed.

Procedure:

[1] From the Walk-Up Menu, press the “GO TO SETUP” key.

READY				STD
DRYER TEMP	SLEEP	SELECT CYCLE	MORE	GO TO SETUP

[2] Enter the 4-digit access code.

1	2	3	4	CANCEL REQUEST

[3] Press the “MORE” key.

▲	▼	CHEM/ CYCLE	MORE	DONE/ RETURN

[4] Press the “INFO” key.

INFO	SETUP	OPTIONS		DONE/ RETURN

[5] Press the “USAGE” key.

USAGE	DIAG	SW VERSION	MORE	DONE/ RETURN

[6] Press the “FIXER USAGE” key.

DEV USAGE	FIXER USAGE	FILM USAGE	SETUP GROUPS	DONE/ RETURN

[7] Press the “USAGE RATE” key.

CLEAR USAGE	USAGE RATE			DONE/ RETURN

To clear the fixer rate information, do the steps below.

[8] Press the “CLEAR USAGE” key to clear both the total volume usage and the usage rate.

CLEAR USAGE	USAGE RATE			DONE/ RETURN

[9] When prompted, “ARE YOU SURE?” press the appropriate key:

- the “YES” key to clear the developer usage information and reset it to zero.
- the “CANCEL REQUEST” to continue recording the developer usage volume without resetting the volume to zero.

[10] Press the “DONE/RETURN” key repeatedly until you return to the display shown below. Then press the “YES” key to return to the Walk-Up Menu.

EXIT SETUP?				
YES				CANCEL REQUEST

Selecting the Film Size for Each Setup Group

Description:

This procedure allows you to select which film size you want displayed in each of the 3 film setup groups.

Group 1 you may select between the metric size 35 x 43 cm or the English size 14 x 17 in.

Group 2 you may select between the metric size 13 x 18 cm or the English size 5 x 7 in.

Group 3 you may select between the metric roll film size 100/105 mm or the English roll film size 3 1/2 in.

Procedure:

[1] From the Walk-Up Menu, press the “GO TO SETUP” key.

STD READY				
DRYER TEMP	SLEEP	SELECT CYCLE	MORE	GO TO SETUP

[2] Enter the 4-digit access code.

1	2	3	4	CANCEL REQUEST

[3] Press the “MORE” key.

▲	▼	CHEM/ CYCLE	MORE	DONE/ RETURN

[4] Press the “INFO” key.

INFO	SETUP	OPTIONS		DONE/ RETURN

[5] Press the “USAGE” key.

USAGE	DIAG	SW VERSION	MORE	DONE/ RETURN

[6] Press the “SETUP GROUPS” key.

DEV USAGE	FIXER USAGE	FILM USAGE	SETUP GROUPS	DONE/ RETURN

[7] Press the appropriate key:

- the “SHOW METRIC” key to select the metric film size for that group
- the “SHOW U.S.” key to select the English film size for that group
- the “NEXT GROUP” key to advance to the next film setup group

SHOW METRIC	SHOW U.S.	NEXT GROUP		DONE/ RETURN

Obtaining Film Usage Rates

Description:

This procedure provides you with film usage information. You may obtain the quantity of films processed since the counter was last reset for any film size you select.

Note

Before doing this procedure, be sure that you have completed the previous procedure on Page 68 that allows you to determine which film size you wish to include in each setup group.

Procedure:

[1] From the Walk-Up Menu, press the “GO TO SETUP” key.

STD READY				
DRYER TEMP	SLEEP	SELECT CYCLE	MORE	GO TO SETUP

[2] Enter the 4-digit access code.

1	2	3	4	CANCEL REQUEST

[3] Press the “MORE” key.

▲	▼	CHEM/ CYCLE	MORE	DONE/ RETURN

[4] Press the “INFO” key.

INFO	SETUP	OPTIONS		DONE/ RETURN

[5] Press the “USAGE” key.

USAGE	DIAG	SW VERSION	MORE	DONE/ RETURN

[6] Press the “FILM USAGE” key.

DEV USAGE	FIXER USAGE	FILM USAGE	SETUP GROUPS	DONE/ RETURN

[7] Press the appropriate key:

- the "▲" key to display the usage count for the next largest film size
- the "▼" key to display the usage count for the next smallest film size
- the "SHEET COUNT" key to display the total number of films processed (all sizes)

▲	▼	CLEAR USAGE	SHEET COUNT	DONE/ RETURN

To clear the film usage information, do the steps below.

[8] Press the "CLEAR USAGE" key.

▲	▼	CLEAR USAGE	SHEET COUNT	DONE/ RETURN

[9] When prompted, "ARE YOU SURE?" press the appropriate key:

- the "YES" key to clear the film usage information and reset it to zero (for all film sizes).
- the "CANCEL REQUEST" to continue recording the film usage information without resetting it to zero.

[10] Press the "DONE/RETURN" key repeatedly until you return to the display shown below. Then press the "YES" key to return to the Walk-Up Menu.

EXIT SETUP?				
YES				CANCEL REQUEST

Obtaining the Processor's Software Version

Description:

This procedure allows you to determine what versions of software are operating in your Processor. You may display the software version for the following programs:

- Boot
- Main
- Accumulator Boot
- Accumulator Main

Procedure:

[1] From the Walk-Up Menu, press the "GO TO SETUP" key.

READY				STD
DRYER TEMP	SLEEP	SELECT CYCLE	MORE	GO TO SETUP

[2] Enter the 4-digit access code.

1	2	3	4	CANCEL REQUEST

[3] Press the "MORE" key.

▲	▼	CHEM/ CYCLE	MORE	DONE/ RETURN

[4] Press the "INFO" key.

INFO	SETUP	OPTIONS		DONE/ RETURN

[5] Press the "SW VERSION" key.

USAGE	DIAG	SW VERSION	MORE	DONE/ RETURN

[6] Press the appropriate key. The software version will appear on the Display Screen.

- the "BOOT" key to display the boot version
- the "MAIN" key to display the main program version
- the "ACCUM BOOT" key to display the accumulator boot version
- the "ACCUM MAIN" key to display the accumulator main program version

BOOT	MAIN	ACCUM BOOT	ACCUM MAIN	DONE/ RETURN

[7] When you are done displaying the different software versions, press the "DONE/RETURN" key repeatedly until you return to the display shown below. Then press the "YES" key to return to the Walk-Up Menu.

EXIT SETUP?				
YES				CANCEL REQUEST

Other Functions

Description:

There are a few other menu options that you might see that have not been discussed in this Operator Manual. Two of the options appear on the display shown below. The operator should never have any need to access these options. These options should be accessed only by a trained, service provider.

USAGE	DIAG	SW VERSION	MORE	DONE/ RETURN

The “DIAG” key allows a trained, service provider access to the internal diagnostics that reside in the Processor.

The “MORE” key allows a trained, service provider access to additional diagnostic functions and provides the capability for the service provider to print error history logs.

Replenishment Solutions

Mixing the Developer and Fixer Solutions

Important

- See Table 3 on Page 19 to determine which type of chemicals to use with the selected cycle.
- When mixing chemicals, follow all instructions and precautions.
- Do not mix more than a 2-week supply of developer and fixer replenisher.

[1] To ensure that replenishment does not occur while the solutions are being mixed, move the Main Circuit Breaker CB1 to the “OFF” position.

[2] Determine which type of chemicals is needed for the film processing cycle that you selected. See the table on Page 19.

[3] Following all directions provided with the solutions, mix at least 19 litres (5 gallons) of each solution.

Filling the Processor Tanks

Figure 11 **Checking the Positions of the Racks**

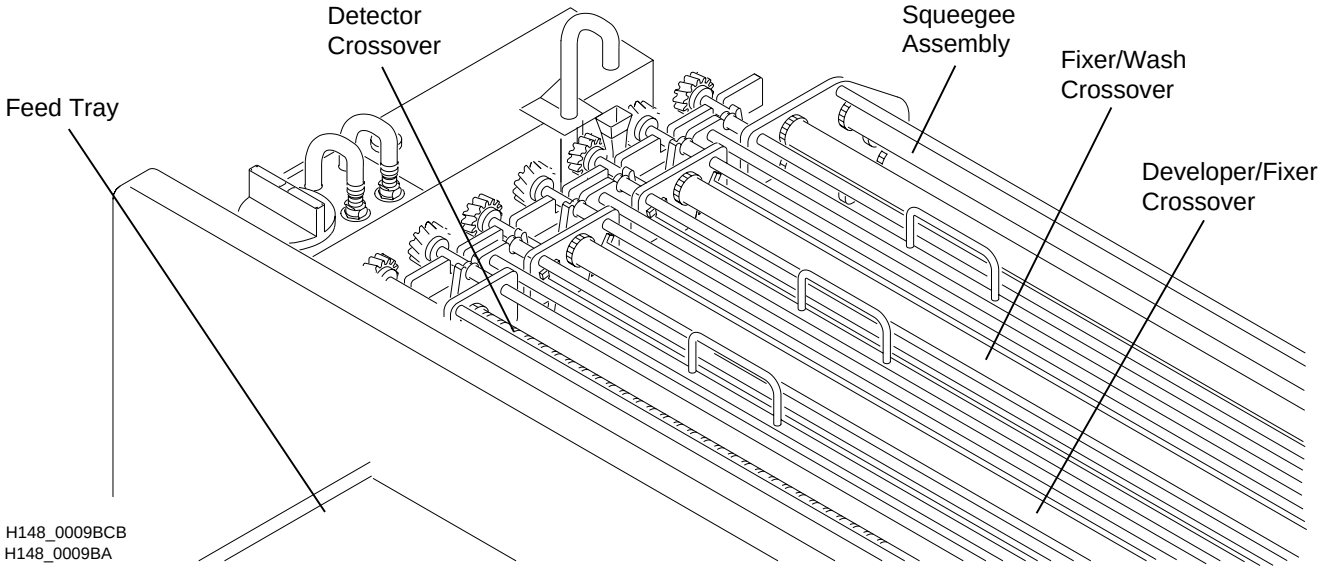

[1] Check that the Racks are in the correct positions.

[2] Close the Developer and Fixer Drains. See Figure 12 on Page 75.

Important

The Replenishment Pumps automatically start when the Processor is turned on, but will not fill the Processor Tanks.

[3] Move the main Circuit Breaker CB1 to the “ON” position.

[4] Wait for the Walk-Up Menu to appear on the Display Panel.

[5] From the Walk-Up Menu, press the “GO TO SETUP” key.

READY				STD
DRYER TEMP	SLEEP	SELECT CYCLE	MORE	GO TO SETUP

[6] Enter the 4-digit access code.

1	2	3	4	CANCEL REQUEST

[7] Press the “MORE” key.

▲	▼	CHEM/ CYCLE	MORE	DONE/ RETURN

[8] Press the “OPTIONS” key.

INFO	SETUP	OPTIONS		DONE/ RETURN

[9] Press the “REPLEN MODE” key.

REPLEN MODE	DAILY STARTUP	DISPLAY UNITS	MORE	DONE/ RETURN

Important

- If the developer and fixer Tanks of the Processor are empty and you do not press “TANK FILL,” a “Fill Error” will occur in approximately 4 minutes.
- The developer and fixer Tanks will not fill if the Top Cover is removed.
- The developer and fixer Tanks require approximately 10 minutes to fill with solution.
- A Tank Fill error message will appear on the Display Panel while the Tanks are filling.
- Once the Tanks are full, the Replenishment Pumps automatically turn off and the normal, Processor warm-up period begins.

[10] Press the “TANK FILL” key.

AUTO	FLOODED	TANK FILL	DISABLE REPLEN	DONE/ RETURN

[11] Press the “DONE/RETURN” key repeatedly until you return to the Walk-Up Menu.

[12] If you are using RP chemicals, wait until the Tanks have been filling for approximately 1 minute. Then add 250 mL (8.5 fl oz) of starter solution to the drive side of the Processor’s developer Tank.

[13] After the Replenishment Pumps stop operating, check that:

(a) the level of both the developer and fixer solutions in the Tanks is at the overflow limit.

(b) there is some movement on the surface of the developer and fixer solutions to indicate that the Recirculation Pump is operating.

Draining the Processor Tanks

Warning

Check that the Drain and Drain tubing meet all the requirements outlined in the Site Specifications, Publication Number 5B6338.

[1] Open the Fixer and Developer Drain Valves.

Note

The Wash Tank does not need to be drained. The Wash Tank drains automatically when you de-energize the Processor.

Figure 12 **Opening or Closing the Fixer and Developer Drain Valves**

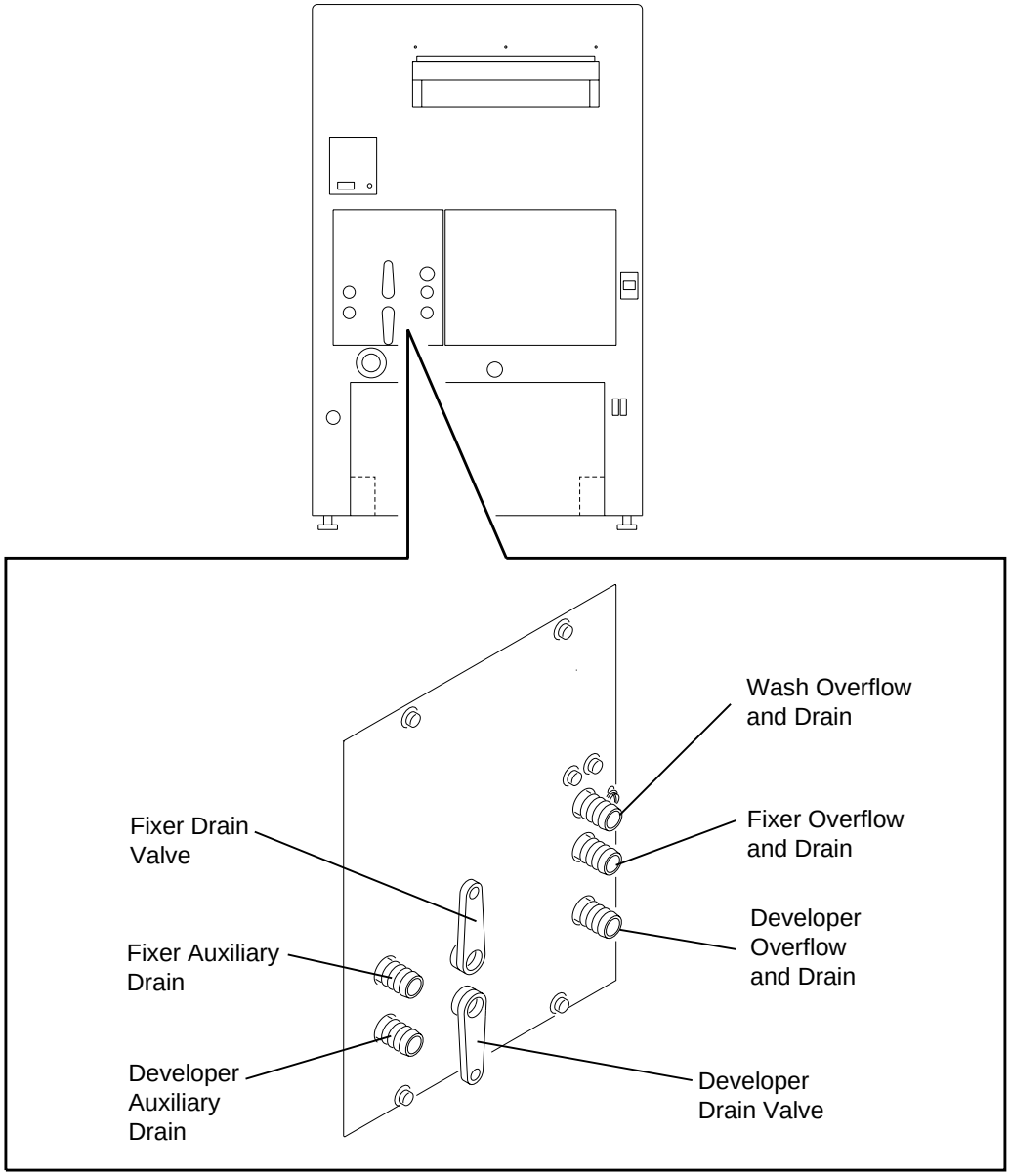

H148_0109DCA
H148_0109DA

Menu Flowchart for the 5000 RA Processor

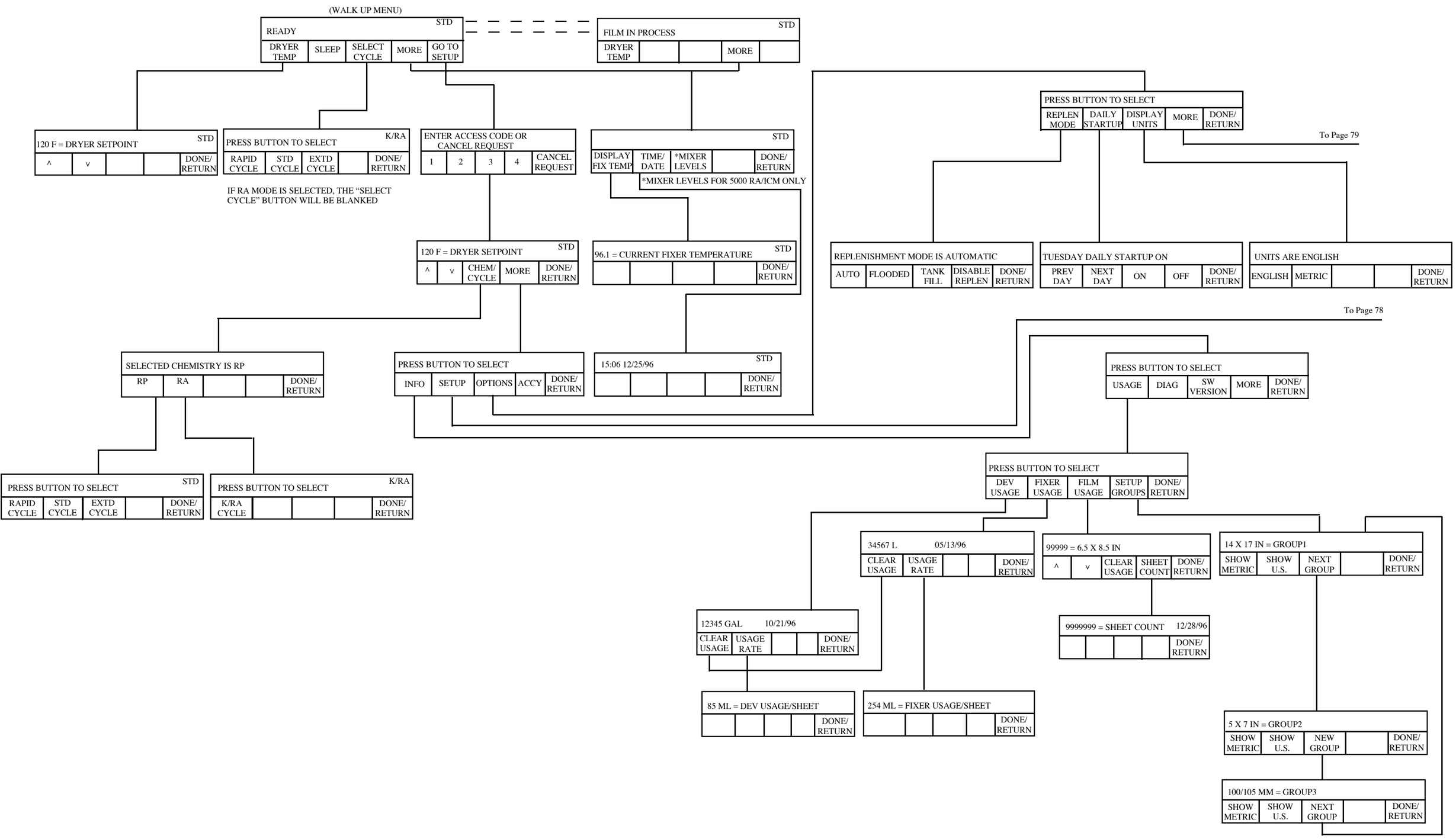

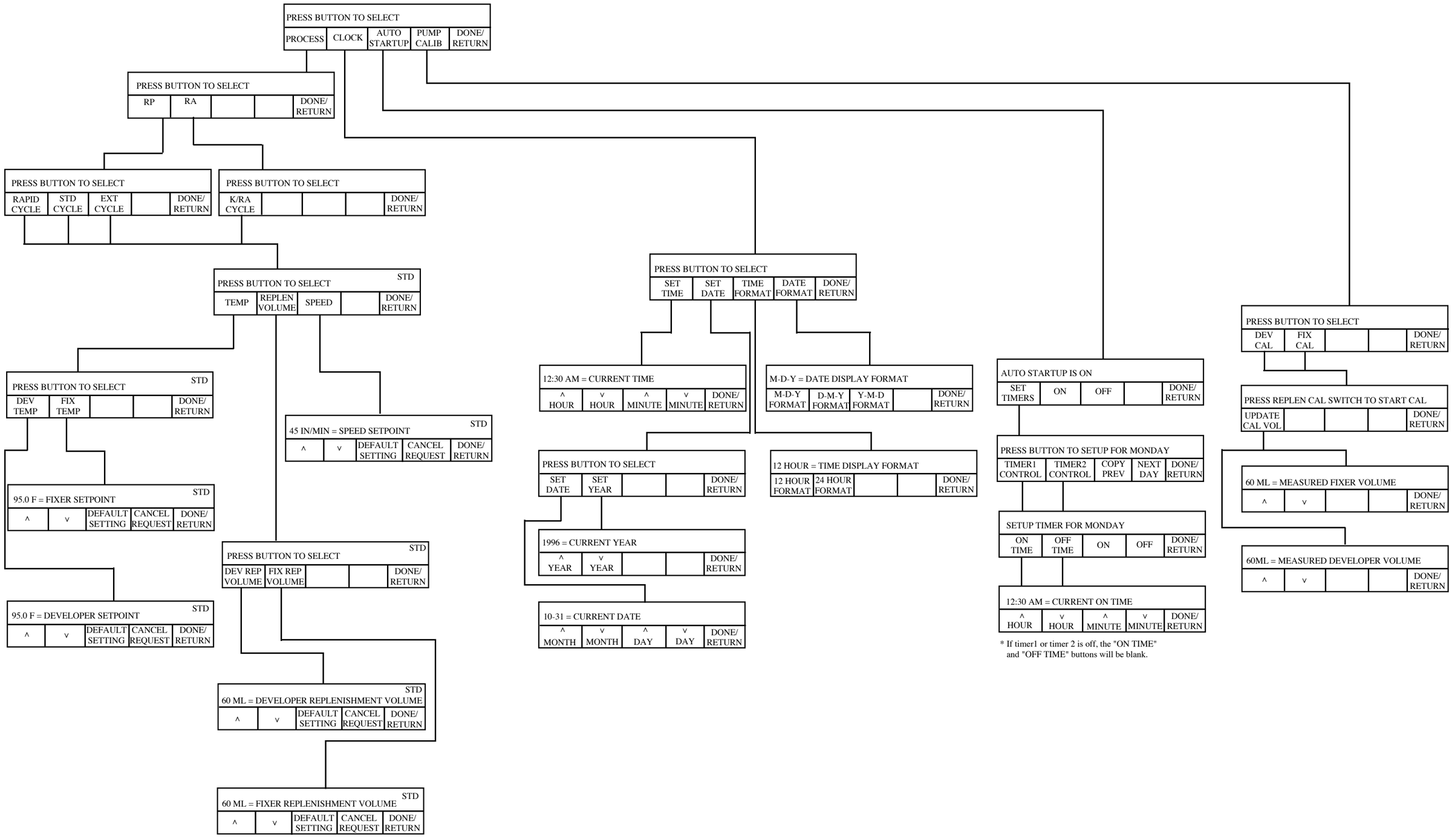
PRESS BUTTON TO SELECT
PROCESS
CLOCK
AUTO STARTUP
PUMP CALIB
DONE/ RETURN
PRESS BUTTON TO SELECT
RP
RA
DONE/ RETURN
PRESS BUTTON TO SELECT
RAPID CYCLE
STD CYCLE
EXT CYCLE
DONE/ RETURN
PRESS BUTTON TO SELECT
K/RA CYCLE
DONE/ RETURN
PRESS BUTTON TO SELECT
STD
TEMP
REPLEN VOLUME
SPEED
DONE/ RETURN
PRESS BUTTON TO SELECT
STD
DEV TEMP
FIX TEMP
DONE/ RETURN
95.0 F = FIXER SETPOINT
STD
^
v
DEFAULT SETTING
CANCEL REQUEST
DONE/ RETURN
95.0 F = DEVELOPER SETPOINT
STD
^
v
DEFAULT SETTING
CANCEL REQUEST
DONE/ RETURN
45 IN/MIN = SPEED SETPOINT
STD
^
v
DEFAULT SETTING
CANCEL REQUEST
DONE/ RETURN
PRESS BUTTON TO SELECT
STD
DEV REP VOLUME
FIX REP VOLUME
DONE/ RETURN
60 ML = DEVELOPER REPLENISHMENT VOLUME
STD
^
v
DEFAULT SETTING
CANCEL REQUEST
DONE/ RETURN
60 ML = FIXER REPLENISHMENT VOLUME
STD
^
v
DEFAULT SETTING
CANCEL REQUEST
DONE/ RETURN
PRESS BUTTON TO SELECT
SET TIME
SET DATE
TIME FORMAT
DATE FORMAT
DONE/ RETURN
12:30 AM = CURRENT TIME
^ HOUR
v HOUR
^ MINUTE
v MINUTE
DONE/ RETURN
M-D-Y = DATE DISPLAY FORMAT
M-D-Y FORMAT
D-M-Y FORMAT
Y-M-D FORMAT
DONE/ RETURN
PRESS BUTTON TO SELECT
SET DATE
SET YEAR
DONE/ RETURN
12 HOUR = TIME DISPLAY FORMAT
12 HOUR FORMAT
24 HOUR FORMAT
DONE/ RETURN
1996 = CURRENT YEAR
^ YEAR
v YEAR
DONE/ RETURN
10-31 = CURRENT DATE
^ MONTH
v MONTH
^ DAY
v DAY
DONE/ RETURN
AUTO STARTUP IS ON
SET TIMERS
ON
OFF
DONE/ RETURN
PRESS BUTTON TO SETUP FOR MONDAY
TIMER1 CONTROL
TIMER2 CONTROL
COPY PREV
NEXT DAY
DONE/ RETURN
SETUP TIMER FOR MONDAY
ON TIME
OFF TIME
ON
OFF
DONE/ RETURN
12:30 AM = CURRENT ON TIME
^ HOUR
v HOUR
^ MINUTE
v MINUTE
DONE/ RETURN
* If timer1 or timer 2 is off, the "ON TIME" and "OFF TIME" buttons will be blank.
PRESS BUTTON TO SELECT
DEV CAL
FIX CAL
DONE/ RETURN
PRESS REPLEN CAL SWITCH TO START CAL
UPDATE CAL VOL
DONE/ RETURN
60 ML = MEASURED FIXER VOLUME
^
v
DONE/ RETURN
60ML = MEASURED DEVELOPER VOLUME
^
v
DONE/ RETURN

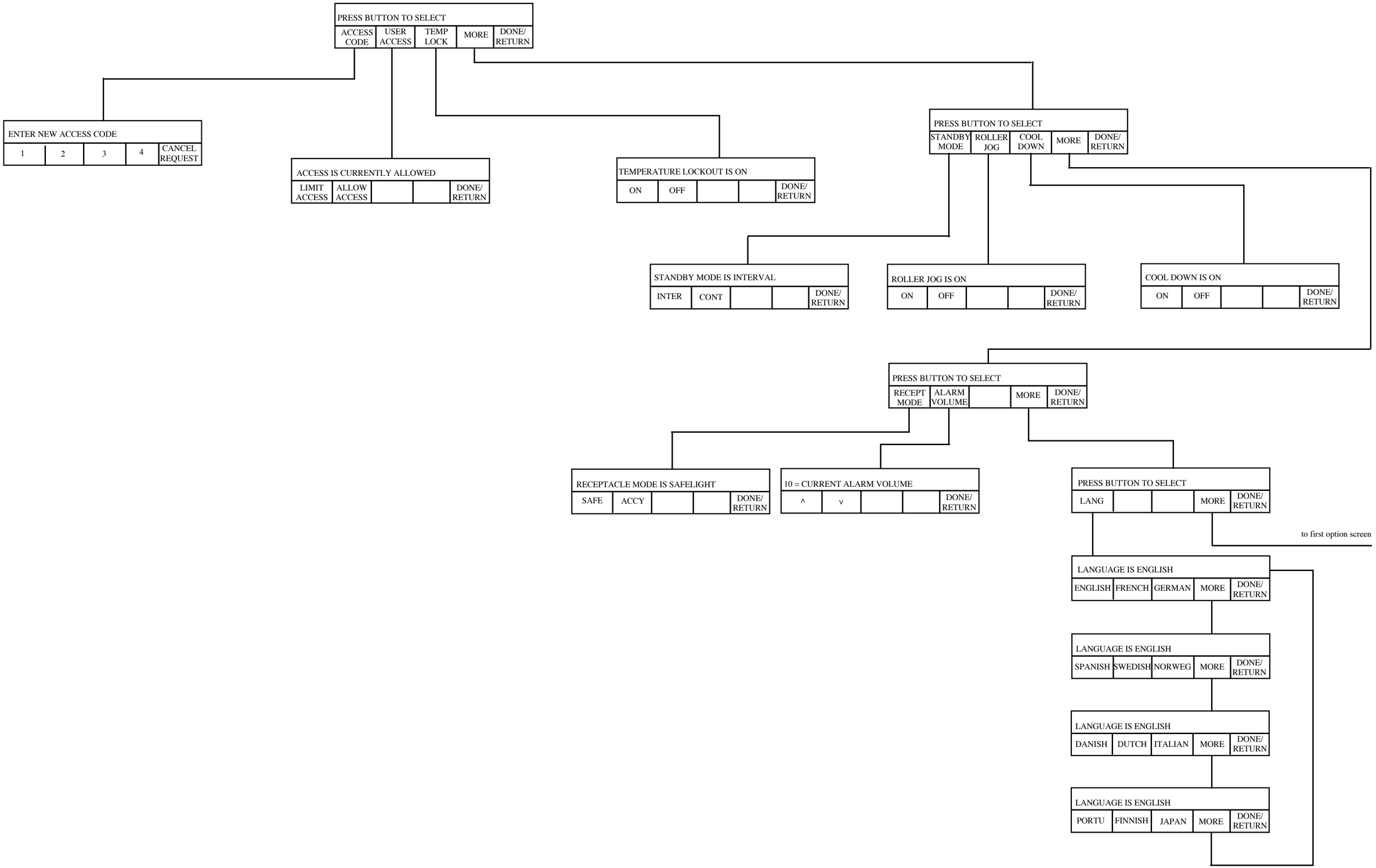
PRESS BUTTON TO SELECT
ACCESS CODE
USER ACCESS
TEMP LOCK
MORE
DONE/ RETURN
ENTER NEW ACCESS CODE
1
2
3
4
CANCEL REQUEST
ACCESS IS CURRENTLY ALLOWED
LIMIT ACCESS
ALLOW ACCESS
DONE/ RETURN
TEMPERATURE LOCKOUT IS ON
ON
OFF
DONE/ RETURN
PRESS BUTTON TO SELECT
STANDBY MODE
ROLLER JOG
COOL DOWN
MORE
DONE/ RETURN
STANDBY MODE IS INTERVAL
INTER
CONT
DONE/ RETURN
ROLLER JOG IS ON
ON
OFF
DONE/ RETURN
COOL DOWN IS ON
ON
OFF
DONE/ RETURN
PRESS BUTTON TO SELECT
RECEPT MODE
ALARM VOLUME
MORE
DONE/ RETURN
RECEPTACLE MODE IS SAFELIGHT
SAFE
ACCY
DONE/ RETURN
10 = CURRENT ALARM VOLUME
^
v
DONE/ RETURN
PRESS BUTTON TO SELECT
LANG
MORE
DONE/ RETURN
to first option screen
LANGUAGE IS ENGLISH
ENGLISH
FRENCH
GERMAN
MORE
DONE/ RETURN
LANGUAGE IS ENGLISH
SPANISH
SWEDISH
NORWEG
MORE
DONE/ RETURN
LANGUAGE IS ENGLISH
DANISH
DUTCH
ITALIAN
MORE
DONE/ RETURN
LANGUAGE IS ENGLISH
PORTU
FINNISH
JAPAN
MORE
DONE/ RETURN

This page is intentionally blank.

Weekly

Important

Reliable operation of the Processor requires that you clean, adjust, and lubricate all parts correctly. More frequent maintenance may be necessary because of site conditions or actual usage. The following guidelines are for Processors installed according to the Site Specifications. For monthly and quarterly maintenance, contact your trained service provider.

Warning

Wear rubber gloves, safety glasses, and protective clothing when doing any daily maintenance procedure. Report any change in the operating condition of the Processor to your service provider.

[1] Move the main Circuit Breaker CB1 on the Processor to the “OFF” position and the wall power switch to the “OFF” position.

[2] Turn off the water supply.

[3] Remove the Top Cover.

[4] Disconnect the Crossover Fill Trough.

Caution

- Handle these assemblies carefully to prevent changing the alignment. **Do not** wash the Racks and Crossovers with water hotter than 44°C (110°F). **Do not** clean the Racks, Crossovers, or Squeegee Rollers using abrasive materials or alcohol.
- To prevent fixer or developer contamination when you remove the Fixer or Developer Rack, place the Splash Guard between the developer and fixer Tanks. Use the Rack Drip Tray when you remove or install any of the Racks.

Figure 13 **Using the Splash Guard and Drip Tray**

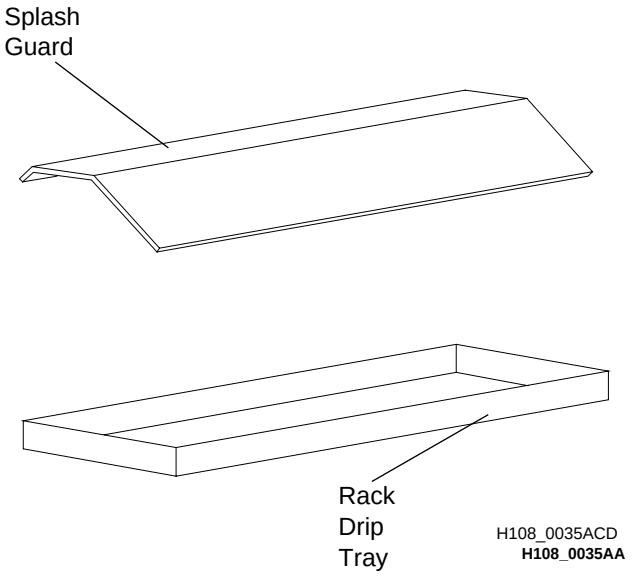

[5] Remove all the Crossovers and the Wash Rack from the Processor.

[6] Rinse the 3 Crossovers, Water Troughs, and the Wash Rack with warm water, no hotter than 44°C (110°F). Wipe the Rollers and the Guide Shoes with a damp, soft, synthetic sponge.

[7] Connect the Crossover Fill Trough.

[8] Allow the Detector Crossover to air dry before you install it in the Processor.

[9] Wipe any chemical deposits from the processing section of the Processor.

[10] Check that all Rollers on all Crossovers and on the Wash Rack rotate freely. Check the squareness of the Crossovers and the Wash Rack.

[11] Check that the Water Troughs are not broken or cracked, and that they are installed correctly on the Crossovers.

[12] Install the Wash Rack and all Crossovers into the Processor. Check that each assembly is firmly seated.

[13] Turn the Processor on and check for correct operation.

[14] Process a test film and check the transport assemblies.

Figure 14 **Cleaning the Crossovers and Racks**

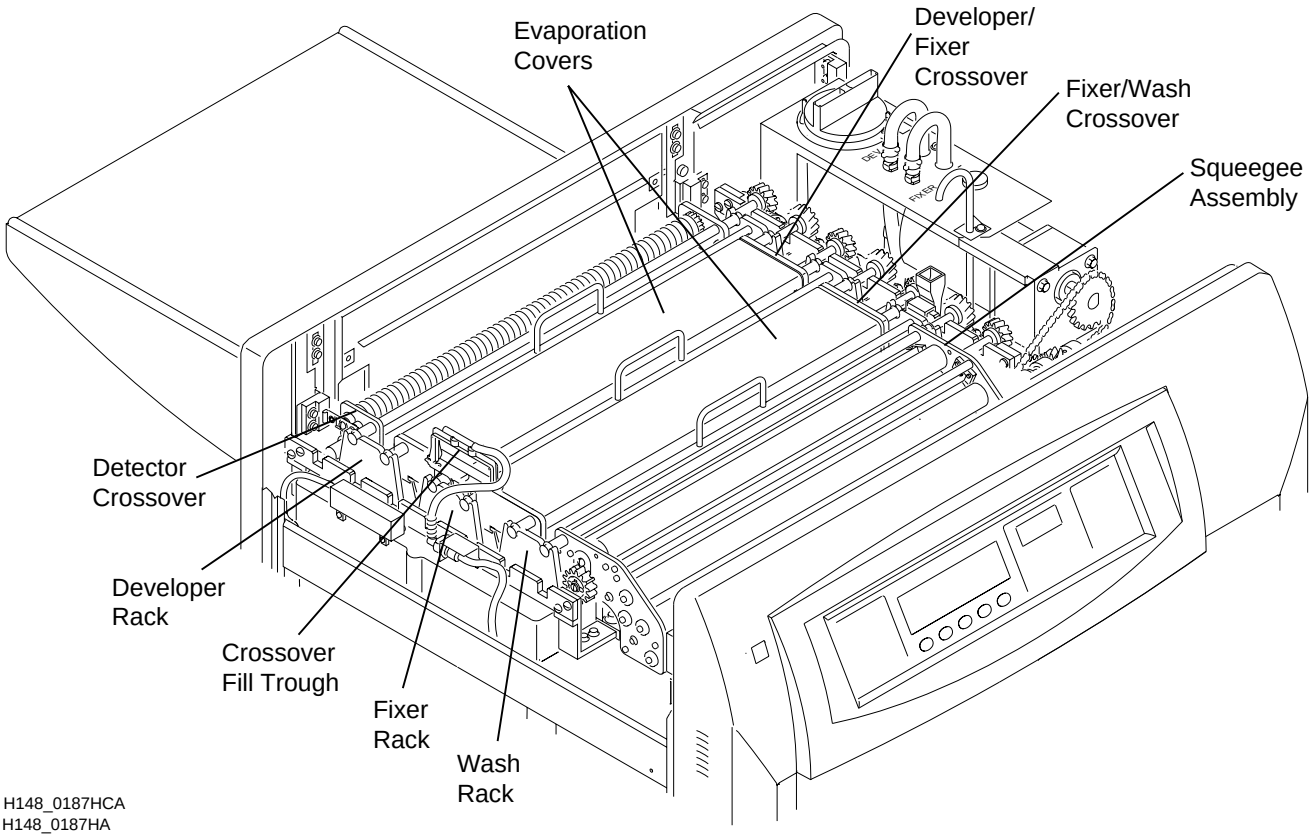

Transport Failure	Surface Artifacts	Abnormal Film Densities	Wet Films	Low Solution Levels	Overlapping of Films	
•					•	Film Feeding Error **Feed only single thicknesses of film. Feed next film only after film feed signal. If there is no film feed signal, refer the difficulty to qualified personnel.**
•					•	Check that all Racks and Crossovers are seated correctly.
•	•	•	•			Feed only compatible films.
•	•					Check that the surfaces of all the Rollers are clean and smooth.
	•	•	•	•		Check the settings for correct replenishment.
	•					Adjust the Dryer temperature control setting to the **lowest** possible temperature consistent with good film drying quality.
	•					Clean the Feed Tray and Detector Rollers.
•	•	•	•		•	Change any chemicals that were not mixed correctly, are exhausted, or are contaminated. Change the Developer Filter. Check that replenishment rates are correctly set. Fill the Replenishment Tanks if necessary. **Mix the developer replenisher in quantities not to exceed a 2-week supply.** **Always use a Splash Guard and Rack Drip Tray when lifting the Racks to prevent contamination. Mix chemicals as directed.**
•				•		Check that the Drain Valves are completely closed. Check that the Tanks are full.
•	•				•	Check that *all* Rollers, Gears, Sprockets, and Idlers are engaged and rotate freely.
•	•				•	Replace any Rollers that have broken or worn Gudgeons.
•	•				•	Replace any Bearings that do not allow the Rollers to rotate freely.

Transport Failure	Surface Artifacts	Abnormal Film Densities	Wet Films	Low Solution Levels	Overlapping of Films	
•	•					If incoming wash water is dirty, clean the Wash Rack, Wash Tank, and Water Reservoir thoroughly. Change the incoming water Filter. Be sure to use the correct water Filter.
	•	•	•			Check incoming water temperature. Temperature must be between 4°C (40°F) and 29°C (85°F).
		•				Check that the correct Bulb and Safelight Filter are in the Safelight and at the correct distance from the Feed Tray and work surface.
•		•				Check that the Top Cover and the Panels are secure on the Processor. If the Processor is installed through the wall, check that there are no leaks in the Lighttight Gasket.
•						If 10 x 10 cm films fail to transport reliably, feed the sheets of films diagonally.
					•	Check the time delay. For all transport speeds, the film feed signal should sound once the trailing edge of the film has advanced 76 mm (3 in.) into the Processor.
			•			Ambient conditions are out of specification.
•						If the solution temperature is low, the Processor will not accept film. Check that the temperature lockout is selected.
				•		Check that solution Level Probes are clean and free from buildup. Check that all external replenishment lines are without kinks or air bubbles.

Warranty

Kodak warrants this *Kodak X-Omat* 5000 RA Processor to function correctly for one year from the date of initial installation, when installed within one year from date of shipment.

Warranty Repair Coverage

If this equipment does not function correctly during the warranty period, the dealer (for *Kodak X-Omat* 5000 RA Processors) who sold the equipment will provide or arrange for repair of the equipment during the dealer's normal working hours. Such repair service will include any adjustments and/or replacement of parts required to maintain your equipment in good working order.

How To Obtain Service

Should the equipment require service, refer to the sales contract for details on whom to call for service, or contact the dealer (for *Kodak X-Omat* 5000 RA Processors) who sold the equipment.

Limitations

Warranty service is limited to the contiguous United States, the island of Oahu in Hawaii, and certain areas of Alaska.

This warranty does not cover —

- circumstances beyond the control of Kodak
- misuse
- abuse
- attachments
- accessories
- alterations not marketed by Kodak (including service or parts to correct problems resulting from the use of such attachments, accessories, or alterations)
- failure to follow the operating instructions recommended by Kodak
- supply items

Kodak makes no other warranties, express or implied, for this equipment.

Repair without charge is the only obligation of both Kodak and the dealer under this warranty. Kodak will not be responsible for any consequential or incidental damages resulting from the sale, use, or improper functioning of this equipment, even if loss or damage is caused by the negligence or other fault of Kodak.

Such damages for which Kodak will not be responsible, include, but are not limited to, loss of revenue or profit, downtime costs, loss of use of the equipment, cost of any substitute equipment, facilities or services or claims of your customers for such damages.

This limitation of liability will not apply to claims for injury to persons or damage to property caused by the sole negligence or fault of Kodak or by persons under its direction or control.

This page is intentionally blank.

Publication History

Date	Pub. No.	ECO No.	Affected Pages	File Name	Notes
October 1995	5B6729	2649-029	All	om3425_1_029.doc	First printing.
January 1996	5B6729	2649-062	47, 87, 88, & covers.	om3425_1_062.doc	Graphic Unification plus minor edits.
May 1997	5B6729	2649-142	5, 7, 8, 10, 18-23, 36, 43, 46-49, 58, 77-84	om3425_1_142.doc	Updated manual to reflect new software and fixed a few typos.
January 1998	5B6729	2649-142	All	om342500.fm	First CD-ROM printing. Content is identical to May 1997 version; formatting may vary from print version.

Kodak and *X-Omat* are trademarks.

om342500.fm

Printed In USA

HEALTH IMAGING

EASTMAN KODAK COMPANY ● ROCHESTER, N.Y. 14650