Publication No. 5B6339
January 1996

INSTALLATION INSTRUCTIONS for the *Kodak X-Omat* 5000 RA PROCESSOR

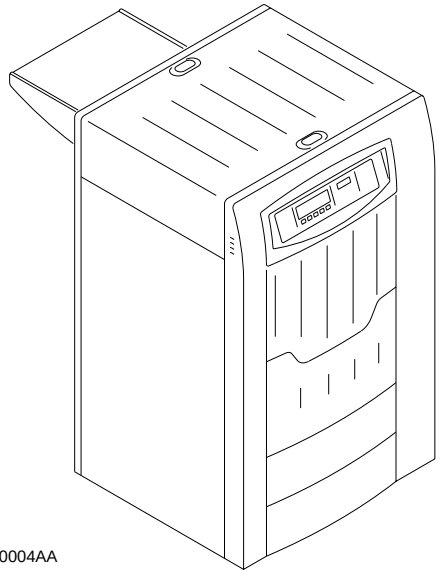

H148_0004AA

© Eastman Kodak Company

PLEASE NOTE The information contained herein is based on the experience and knowledge relating to the subject matter gained by Eastman Kodak Company prior to publication.

No patent license is granted by this information.

Eastman Kodak Company reserves the right to change this information without notice, and makes no warranty, express or implied, with respect to this information. Kodak shall not be liable for any loss or damage, including consequential or special damages, resulting from any use of this information, even if loss or damage is caused by Kodak's negligence or other fault.

This equipment includes parts and assemblies sensitive to damage from electrostatic discharge. Use caution to prevent damage during all service procedures.

Warning

To avoid hazardous conditions, keep floors and floor coverings around your *Kodak X-Omat* Processors and associated drains clean and dry at all times. Any accumulation of fluids from mixing tanks, drain lines, etc, should be cleaned up immediately. In the event of an accumulation of liquid due to backup, overflow, or other malfunctions of the drain associated with your *X-Omat* Processor, call a plumber or other contractor to correct any problem with the drain. Kodak accepts no responsibility or liability whatsoever for the serviceability of any drain connected to or associated with a *Kodak X-Omat* Processor. Such drains are the sole responsibility of the customer.

Important

Have all parts necessary for the installation with you when you arrive at the site. For dryer end through-the-wall installations, order the *Kodak X-Omat* 5000 RA THROUGH-THE-WALL LIGHT-LOCK KIT, CAT 898 0815. If local codes require seismic mountings, order SEISMIC KIT 8B6812 for 3/8-in. LEVELING SCREWS or SEISMIC KIT 8B7038 for 1/2-in. LEVELING SCREWS. Each SEISMIC KIT includes all parts necessary to install the BRACKETS on one PROCESSOR.

Table of Contents

Description	Page
General Information	4
Electrostatic Discharge	4
Overview	4
Preventive Measures	4
Special Tools Required	4
Preparing the PROCESSOR for Installation	5
Unpacking the PROCESSOR	5
Removing the Packing Material	5
Removing the PROCESSOR from the PALLET	6
Removing the PANELS and Checking the Packing List	8
Removing the Packing Material from the DRYER and the SHIPPING SCREW	9
Installing the LEVELING SCREWS	10
Installing the PROCESSOR Through a Wall — Feed End	11
Installing the PROCESSOR Through a Wall — Dryer End	12
Leveling the PROCESSOR	13
Installing the RACKS	14
Installing the CROSSOVERS and the SQUEEGEE ASSEMBLY	17
Connecting the PROCESSOR	20
Making the Electrical Connections	20
Connecting the JUMPERS at TB2 and TB3 and the Wires to TB1	20
Connecting the Wires to TERMINAL STRIP TB1	22
Changing the PROCESSOR to 50 Hz Operation	28
Making the Plumbing Connections	29
Installing the DEVELOPER FILTER	29
Connecting the Drains	29
Connecting the Water	30
Connecting the REPLENISHMENT TUBES	31
Connecting the REPLENISHMENT TANKS	31
Measuring the Static Pressure and Making the Exhaust Connections	32
Installing an AUXILIARY VENTILATION FAN KIT	34
Installing and Adjusting the FEED TRAY	35
Installing the FEED TRAY	35
Adjusting the Height of the FEED TRAY	36
Aligning the FILM GUIDE	36
Checking for the Correct Position of the LIGHT SHIELD	38
Checking the System	39
Checking for Leakage	39
Checking Miscellaneous Components	40
Checking the DISPLAY PANEL	40
Checking the Transport	40
Final Steps	41
Publication History	42

Section 1: General Information

Electrostatic Discharge

Overview

ESD — electrostatic discharge — is a primary source of:

- product downtime
- lost productivity
- costly repairs

While one cannot feel a static charge of less than 3,500 volts, as few as 30 volts can damage or destroy essential components in electronic equipment.

Preventive Measures

- Always look for an ESD warning label before doing any procedure involving static-sensitive components such as CIRCUIT BOARDS. All static-sensitive components are marked with bright graphic labels, which frequently include instructions. Follow all label instructions.
- Wear a grounding strap when handling static-sensitive components. Always make certain that the clip remains attached to a properly grounded, unpainted, clean surface.
- Repair static-sensitive components at an ESD-protected work station or use a portable grounding mat. For help in setting up an ESD-protected work station, contact your Kodak representative.
- When moving static-sensitive components from one area to another, insert and transport the components in ESD-protective packaging. Transparent antistatic bags are available from a variety of manufacturers and will help shield components from ESD damage.

Special Tools Required

Tool No.	Description
TL-1434	12-in. BENCH LEVEL
TL-2431	AIR METER

Section 2: Preparing the PROCESSOR for Installation

Unpacking the PROCESSOR

Removing the Packing Material

Note

If you are unpacking the PROCESSOR anywhere other than the installation site, either install all removed parts or pack them carefully with the PROCESSOR for transport.

[1] Check the shock-indicator labels on the shipping carton for possible damage in shipping.

[2] Cut the bands around the outside of the shipping carton.

[3] Open the top of the shipping carton, and remove the cardboard and the PREPACK items that are above the PROCESSOR.

[4] Remove:

a. shipping carton from the PROCESSOR

b. tape and corner PROTECTORS

c. TOP COVER from the PROCESSOR

d. CROSSOVERS

e. SQUEEGEE ASSEMBLY

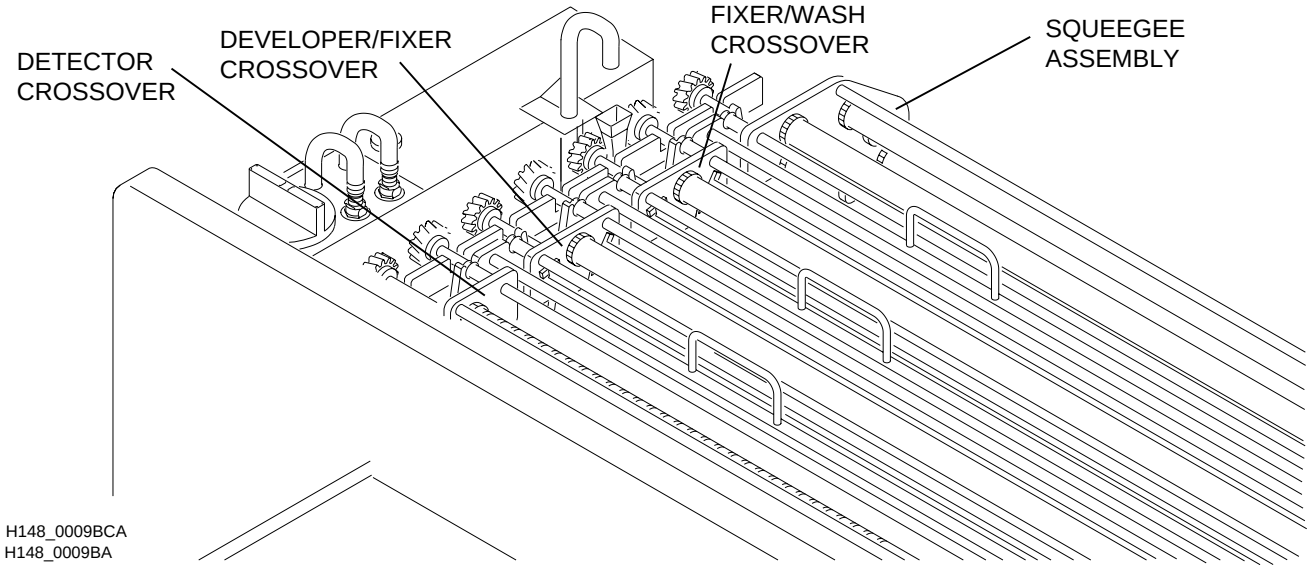

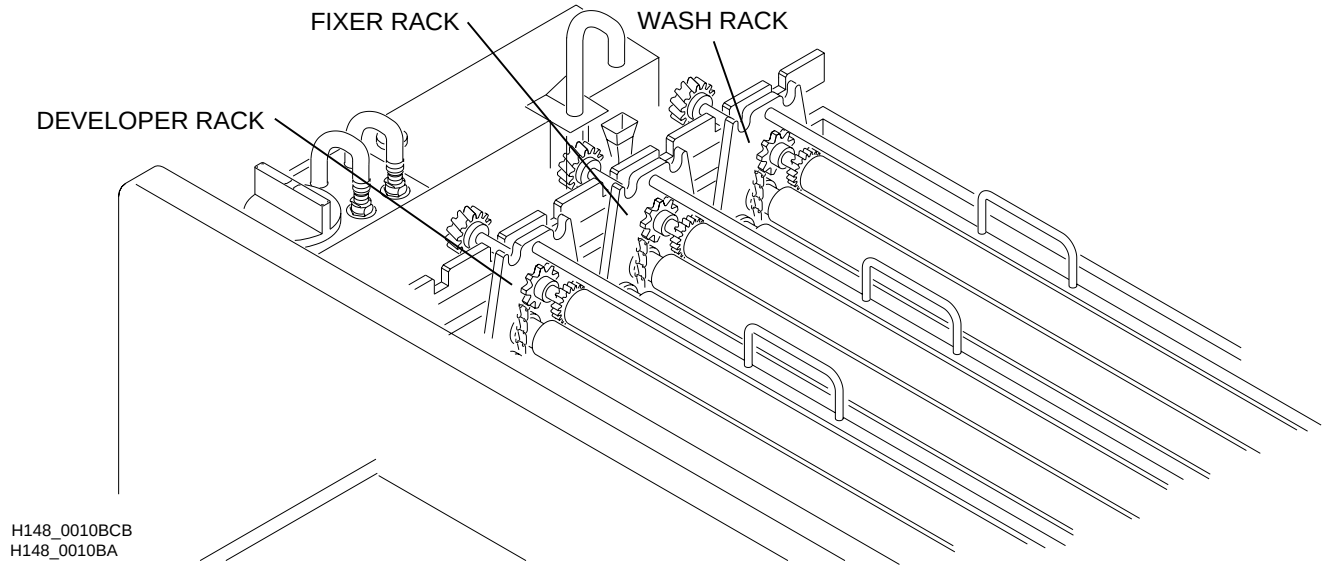

[5] Remove the RACKS and the plastic packing material.

Removing the PROCESSOR from the PALLET

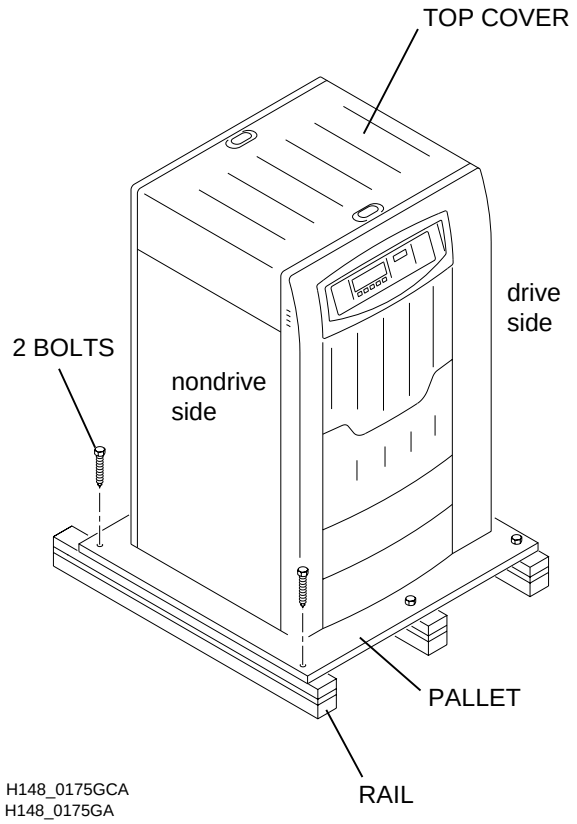

Warning

- The PROCESSOR weighs over 227 kg (500 lb). Use 2 persons when installing the LEVELING SCREWS and moving the PROCESSOR into position.
- The PROCESSOR is not fastened to the PALLET. Be careful when moving the PALLET.

[1] Move the PROCESSOR, on the PALLET, as close as possible to the installation site.

Note

The following steps are for moving the PROCESSOR off the drive side of the PALLET, but if access is easier on the nondrive side of the PROCESSOR, remove the BOLTS and RAIL from the nondrive side of the PALLET.

[2] Move the PROCESSOR toward the nondrive side until the nondrive side of the PROCESSOR is flush with the nondrive edge of the PALLET.

[3] Remove the 2 BOLTS and the RAIL that is under the drive side of the PALLET.

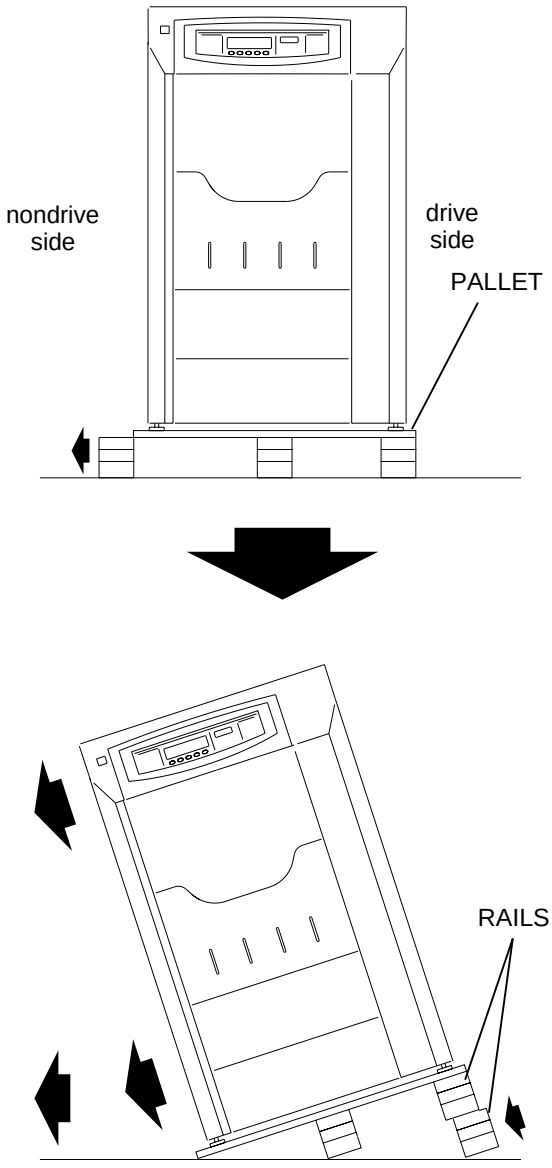

H148_0176CCA
H148_0176CA

[4] Carefully move the PROCESSOR to the center of the PALLET.

[5] Carefully tilt the PROCESSOR and PALLET toward the drive side until the other person can place the RAIL under the nondrive side RAIL of the PALLET. See the figure.

[6] Continue to tilt and move the PROCESSOR to remove the PROCESSOR from the PALLET.

Removing the PANELS and Checking the Packing List

DRYER END of the PROCESSOR

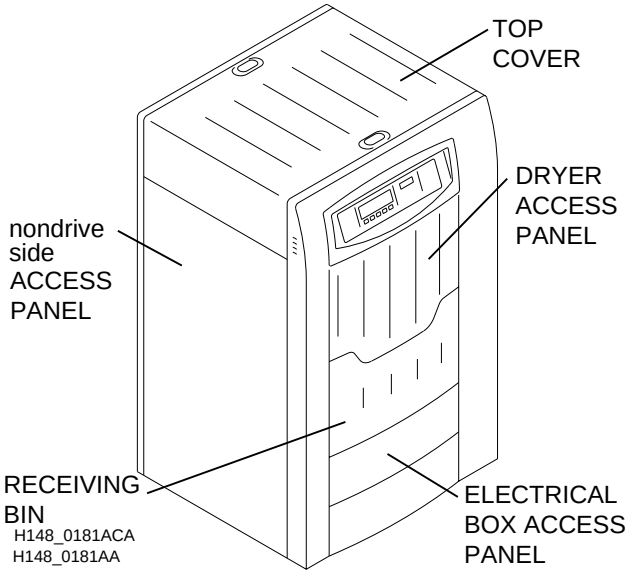

Feed End of the PROCESSOR

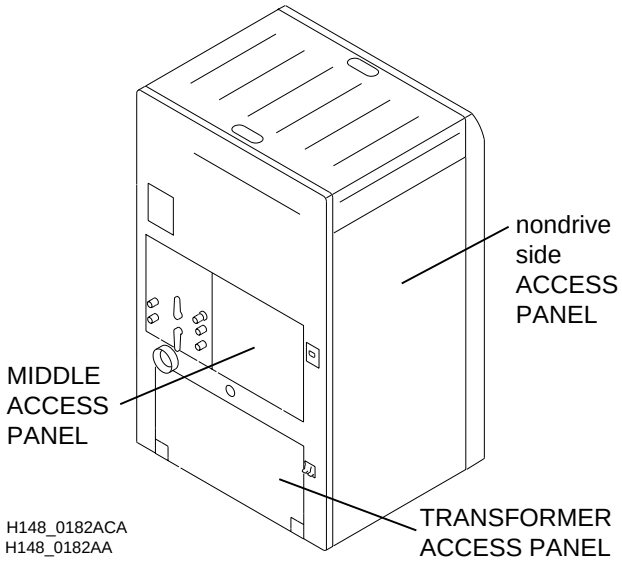

[1] Remove:

- RECEIVING BIN
- 2 side ACCESS PANELS
- DRYER ACCESS PANELS
- ELECTRICAL BOX ACCESS PANEL
- MIDDLE ACCESS PANEL
- TRANSFORMER ACCESS PANEL

[2] Remove the items packed behind the drive side ACCESS PANEL.

[3] Use the Packing List to check that all the items on the List were shipped with the PROCESSOR.

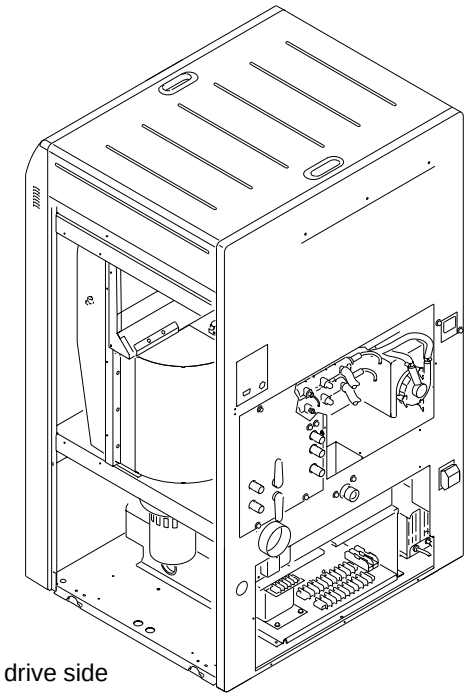

H148_0188GA

Removing the Packing Material from the DRYER and the SHIPPING SCREW

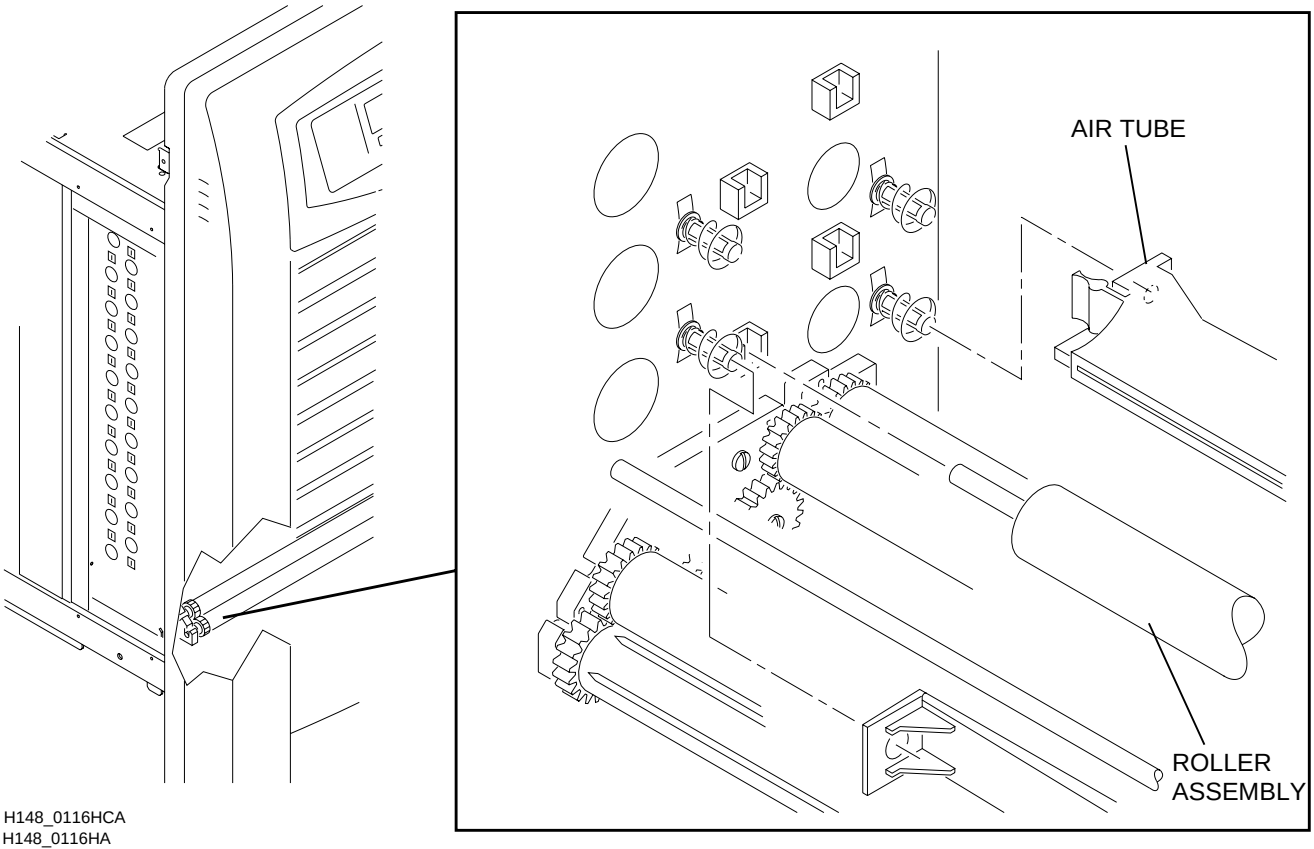

H148_0116HCA
H148_0116HA

[1] Remove the packing material that holds the ends of the ROLLER ASSEMBLIES and AIR TUBES.

[2] Remove the front AIR TUBES and all the ROLLERS from the DRYER.

[3] Remove all the remaining packing material from the DRYER.

[4] Check that the back AIR TUBES are fully seated on both the drive and nondrive sides.

[5] Install the ROLLERS and front AIR TUBES.

[6] Check that the ROLLERS and the front AIR TUBES are fully seated on both the drive and nondrive sides.

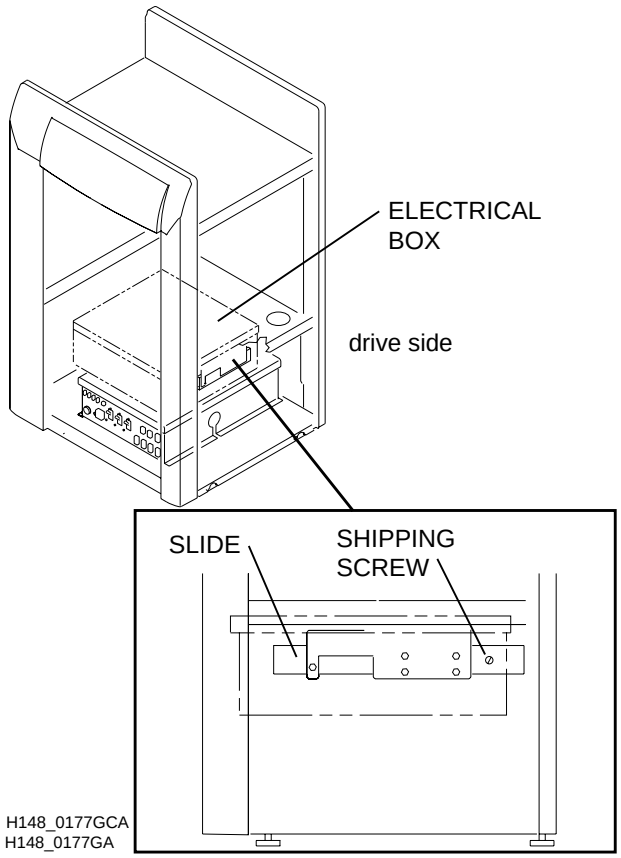

H148_0177GCA
H148_0177GA

[7] Remove the SHIPPING SCREW from the drive side ELECTRICAL BOX SLIDE.

[8] Remove the tape from the ELECTRICAL BOX.

Installing the LEVELING SCREWS

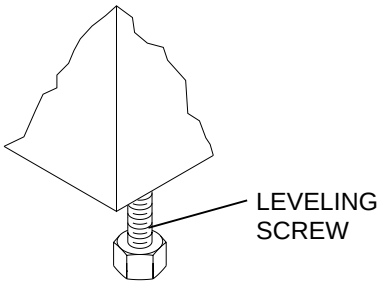

H148_0184ACA
H148_0184AA

Caution

Tilting the PROCESSOR from front to back may cause damage to the PANELS of the PROCESSOR. To install the LEVELING SCREWS, tilt the PROCESSOR from side to side.

[1] Tilt the PROCESSOR to the drive side, and install the 2 nondrive side LEVELING SCREWS.

[2] Rotate the LEVELING SCREWS fully up.

[3] Tilt the PROCESSOR to the nondrive side and install the other 2 LEVELING SCREWS, and rotate fully up.

Installing the PROCESSOR Through a Wall — Feed End

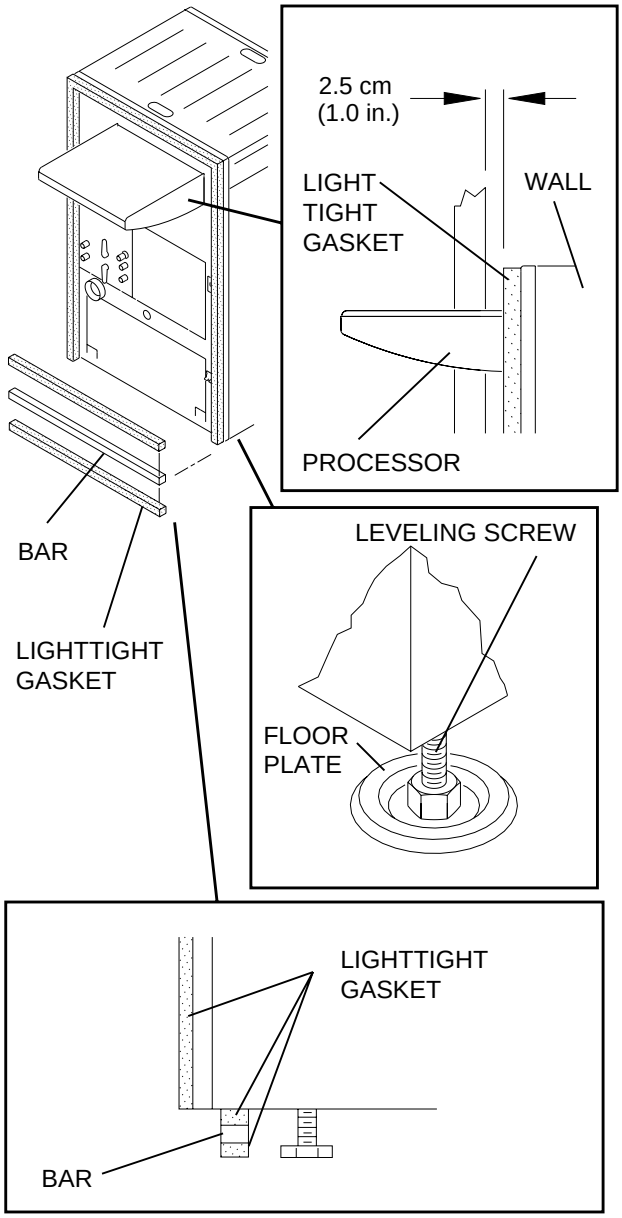

H148_0034CCA
H148_0034CA

Note

- For Dryer End installation through the wall, see Page 12.
- The customer is responsible for preparing a hole in the wall of the correct size to install the PROCESSOR. Refer to the Site Specifications, Publication Part No. 5B6338

Caution

Do not stretch the LIGHTTIGHT GASKET.

[1] Install the self-adhesive LIGHTTIGHT GASKET onto the feed end of the PROCESSOR.

(a) Cut strips of GASKET for the 3 edges of the PROCESSOR. See the figures.

(b) Cut 2 strips of GASKET for the top and bottom of the BAR.

[2] Move the PROCESSOR within approximately 2.5 cm (1 in.) of the wall.

[3] Install the 4 FLOOR PLATES under the 4 LEVELING SCREWS. FLOOR PLATES are available for the 3/8-in. LEVELING SCREWS only. If installing a SEISMIC KIT, use the FLOOR PLATES provided with the SEISMIC KIT.

[4] Check that the LIGHTTIGHT GASKET is tight against the wall. Compress the LIGHTTIGHT GASKET to approximately 10 mm (3/8 in.).

[5] Wait to place the BAR under the PROCESSOR until after you level the PROCESSOR on Page 13.

[6] Check for light leakage around the PROCESSOR, then advance to Page 13.

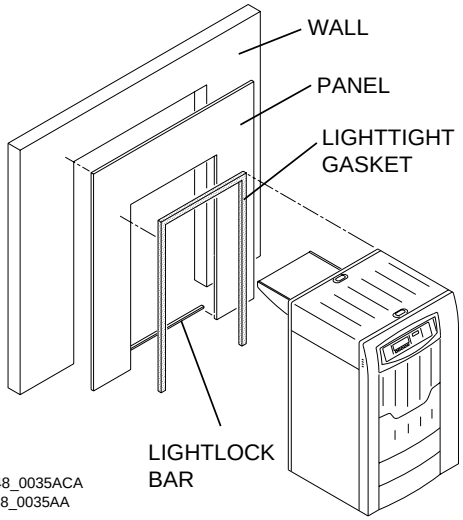

H148_0035ACA
H148_0035AA

Installing the PROCESSOR Through a Wall — Dryer End

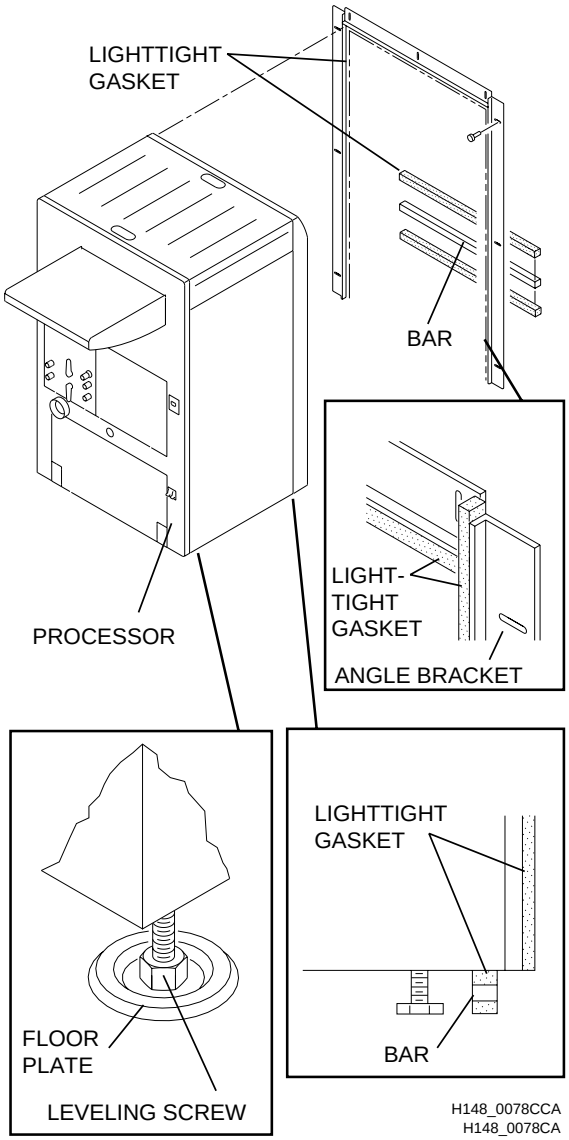

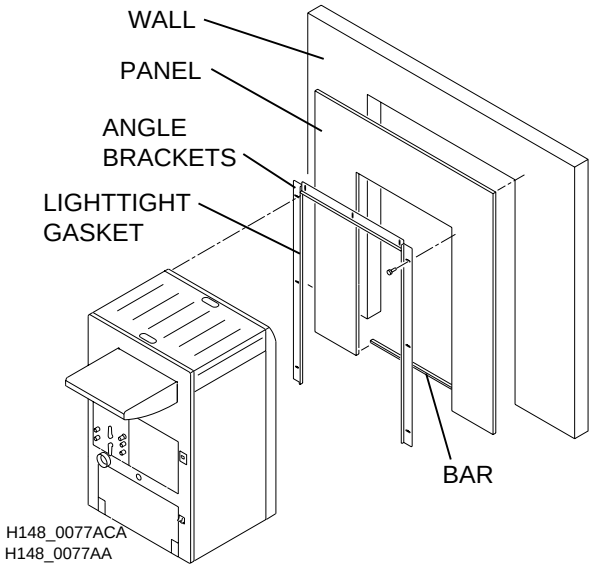

Note

- See Page 11 for Feed End installation through the wall.
- The customer is responsible for preparing a hole in the wall of the correct size to install the PROCESSOR. Refer to the Site Specifications, Publication Part No. 5B6338.
- For Dryer End installation through the wall, order *Kodak X-Omat* THROUGH-THE-WALL LIGHT-LOCK KIT, CAT No. 898 0815.

Caution

Do not stretch the LIGHTTIGHT GASKET.

[1] Install the self-adhesive LIGHTTIGHT GASKET onto the ANGLE BRACKETS.

(a) Cut strips of GASKET for each of the 3 edges of the ANGLE BRACKETS. See the figure.

(b) Cut 2 strips of GASKET for the top and bottom of the BAR.

[2] Attach the ANGLE BRACKETS to the wall.

[3] Move the PROCESSOR within approximately 2.5 cm (1 in.) of the wall.

[4] Install the 4 FLOOR PLATES under the 4 LEVELING SCREWS. FLOOR PLATES are available for the 3/8-in. LEVELING SCREWS only. If installing a SEISMIC KIT, use the FLOOR PLATES provided with the SEISMIC KIT.

[5] If you are also installing a *Kodak* 5000 RA INTEGRATED CHEMICAL MIXER, install it now. See the Installation Instructions in the Service Manual for the MIXER, Publication Part No. 5B6727.

[6] Level the PROCESSOR. See Page 13.

[7] Adjust the ANGLE BRACKETS until the LIGHTTIGHT GASKET is compressed against the PROCESSOR to approximately 10 mm (3/8 in.).

[8] Tighten the 9 SCREWS.

[9] Check that the LIGHTTIGHT GASKET is tight against the PROCESSOR.

[10] Place the BAR under the PROCESSOR.

[11] Check for light leakage around the PROCESSOR.

Leveling the PROCESSOR

Leveling the PROCESSOR from Side to Side

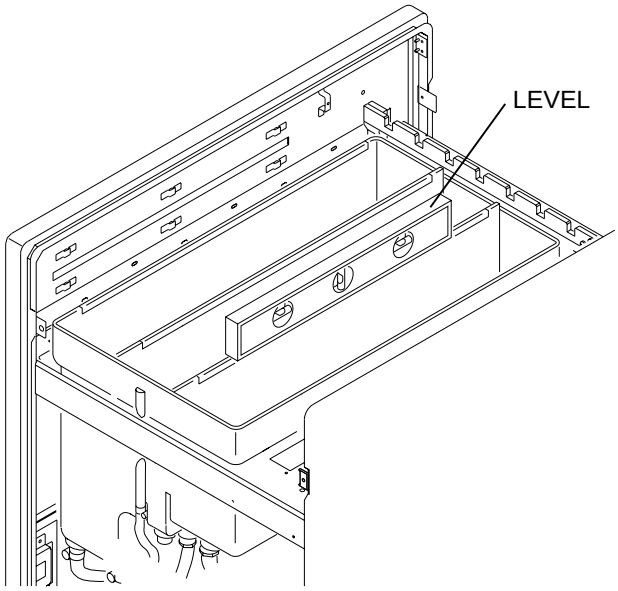

H148_0017GCA
H148_0017GA

[1] Place a LEVEL TL-1434 as shown in the figure at the left.

[2] Adjust the LEVELING SCREWS to level the PROCESSOR from side to side.

Caution

To prevent damage to the LEVELING SCREWS and the PROCESSOR, do not allow more than a 2.5 cm (1 in.) clearance between the bottom of the PROCESSOR and the HEAD of the LEVELING SCREW.

[3] Place a LEVEL as shown in the figure below at the left. Adjust the LEVELING SCREWS to level the PROCESSOR from front to back.

Leveling the PROCESSOR from Front to Back

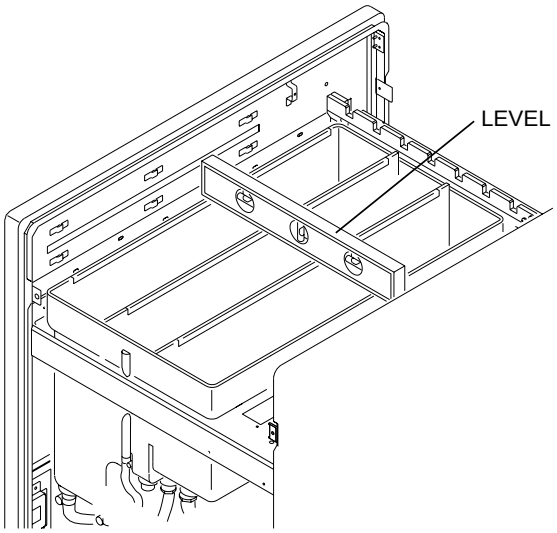

H148_0018GCA
H148_0018GA

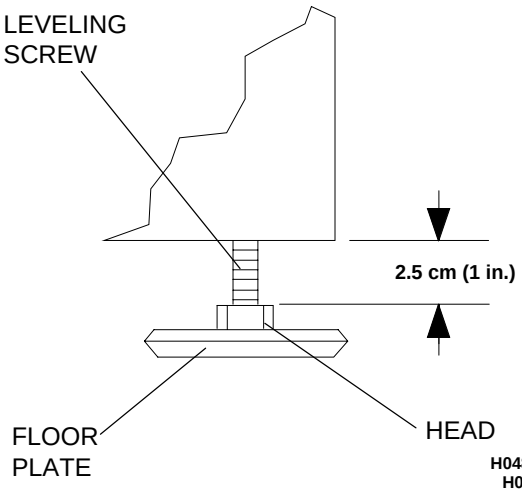

H048_0141ACA
H048_0141AC

Installing the RACKS

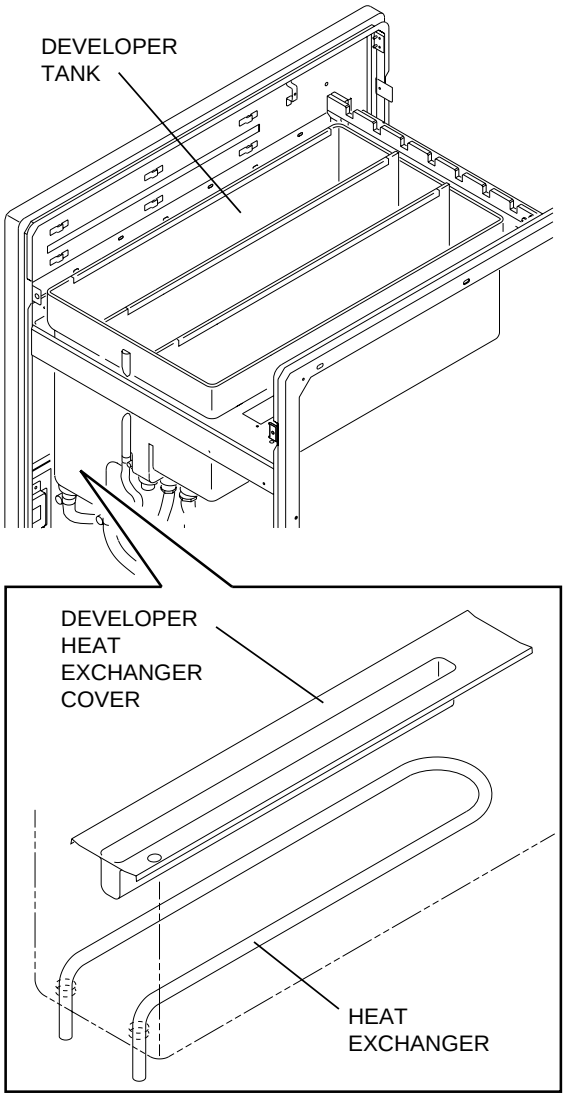

H148_0016CCA
H148_0016CA

[1] Unwrap the items removed during the unpacking procedure.

[2] Check that:

- DEVELOPER HEAT EXCHANGER COVER is correctly seated in the bottom of the DEVELOPER TANK
- DEVELOPER HEAT EXCHANGER COVER is pressed completely down

[3] Install:

- DEVELOPER RACK
- FIXER RACK
- WASH RACK

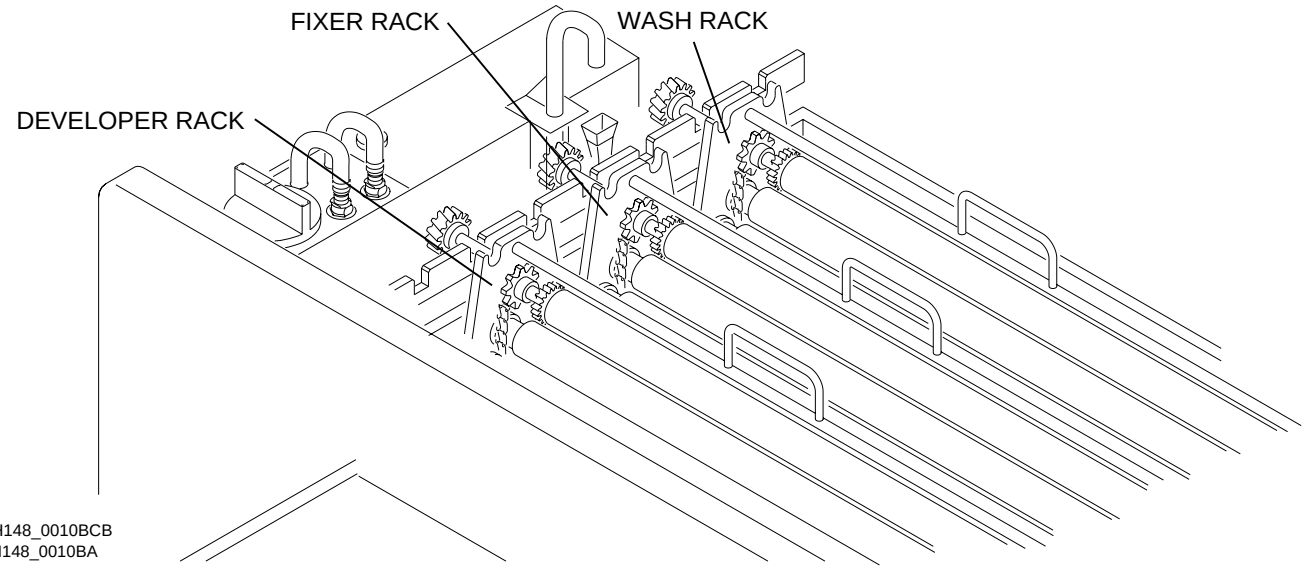

H148_0010BCB
H148_0010BA

Checking the GEARS

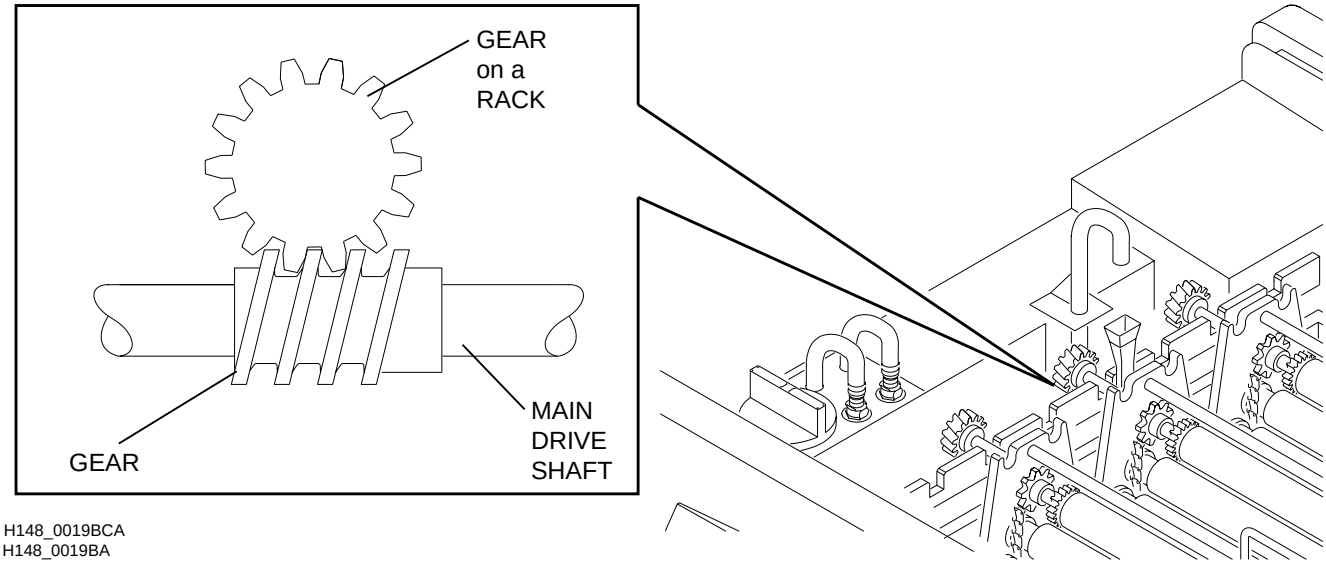

H148_0019BCA
H148_0019BA

[4] Check that the RACKS are in the correct positions and are seated correctly.

[5] Check that the GEARS of the RACKS engage the GEARS of the MAIN DRIVE SHAFT.

[6] If necessary for local codes, install a SEISMIC KIT. Use SEISMIC KIT 8B6812 for 3/8-in. LEVELING SCREWS or SEISMIC KIT 8B7038 for 1/2-in. LEVELING SCREWS. Each SEISMIC KIT includes all parts necessary to install the BRACKETS on one PROCESSOR

Installing the SEISMIC BRACKETS

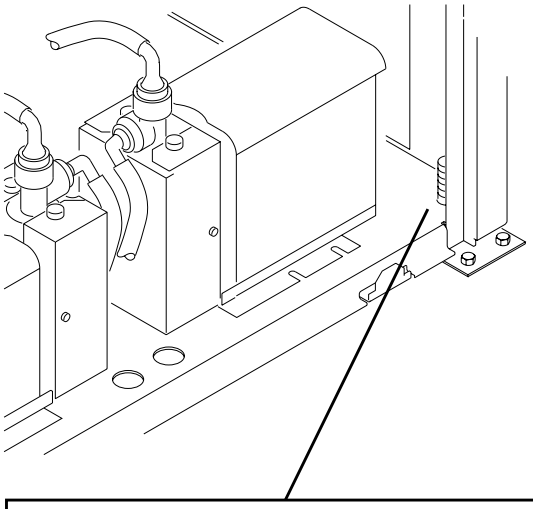

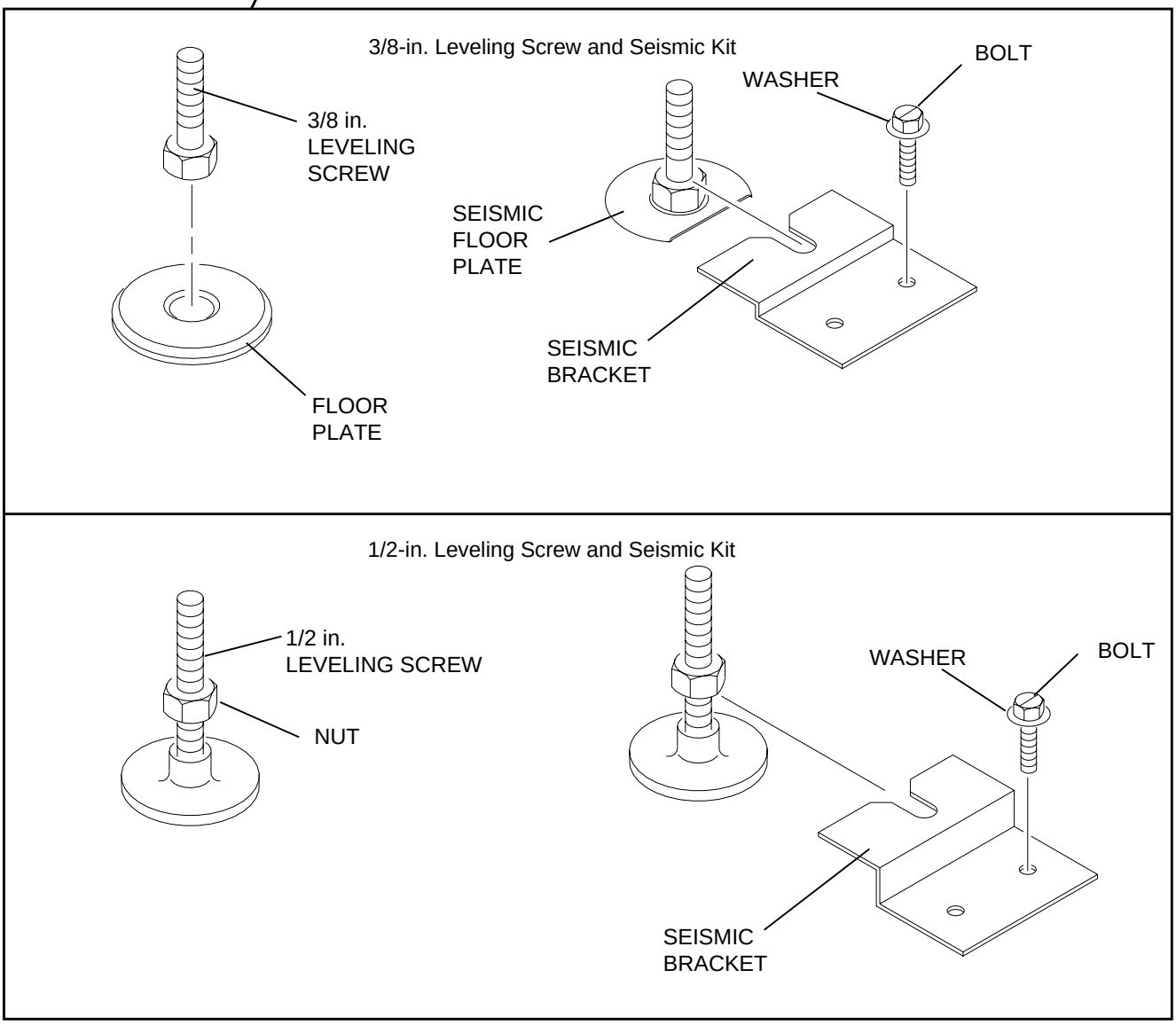

H148_0163ECB
H148_0163EA

Installing the CROSSOVERS and the SQUEEGEE ASSEMBLY

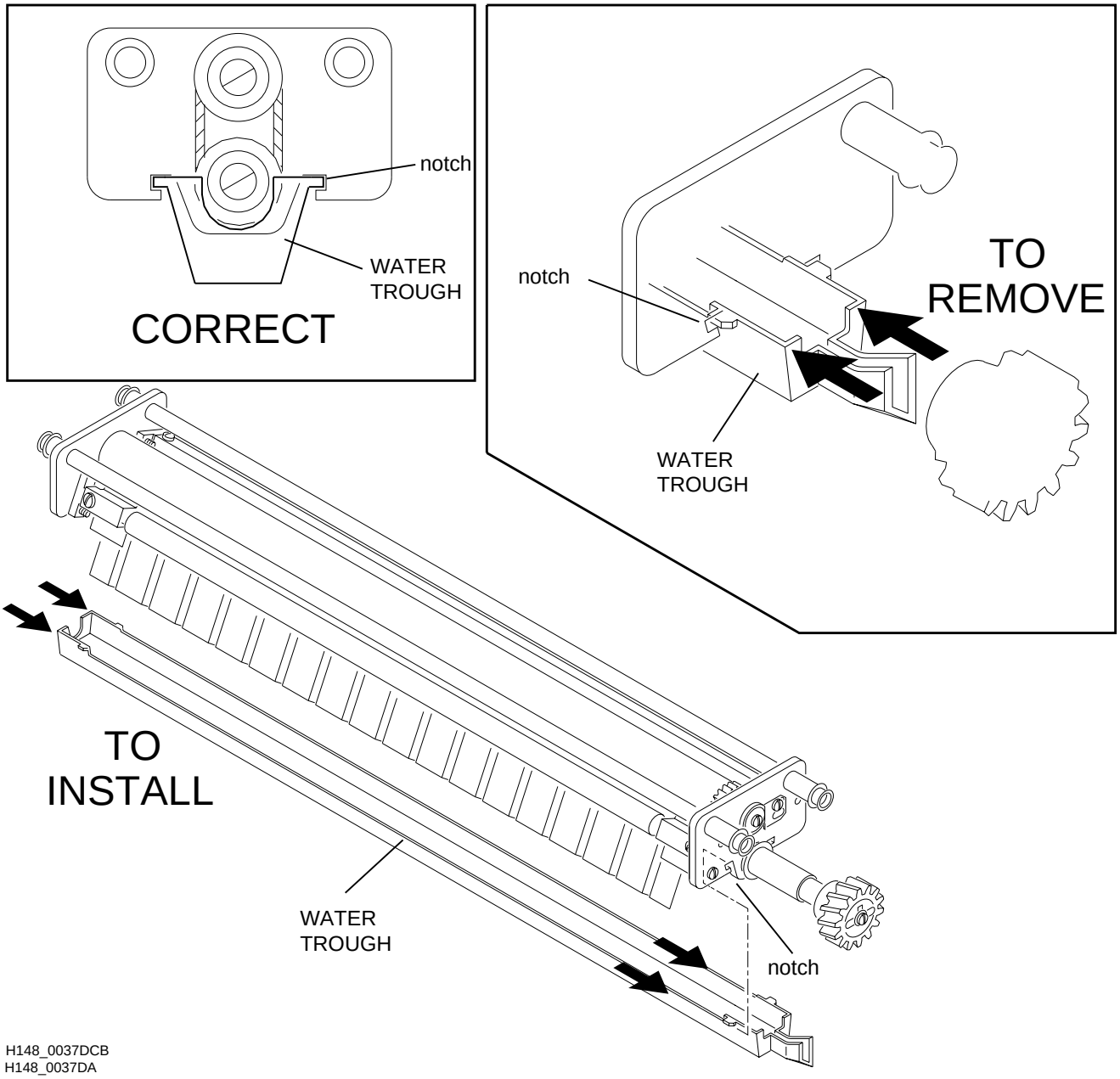

Important

To prevent water from mixing with the processing chemicals, both ends of the WATER TROUGH must be in the notches in the SIDEPLATES.

[1] Check that the 2 WATER TROUGHS are installed correctly on the FIXER/WASH CROSSOVER and the DEVELOPER/FIXER CROSSOVER. Both ends of the WATER TROUGH must be in the notches in the SIDEPLATES.

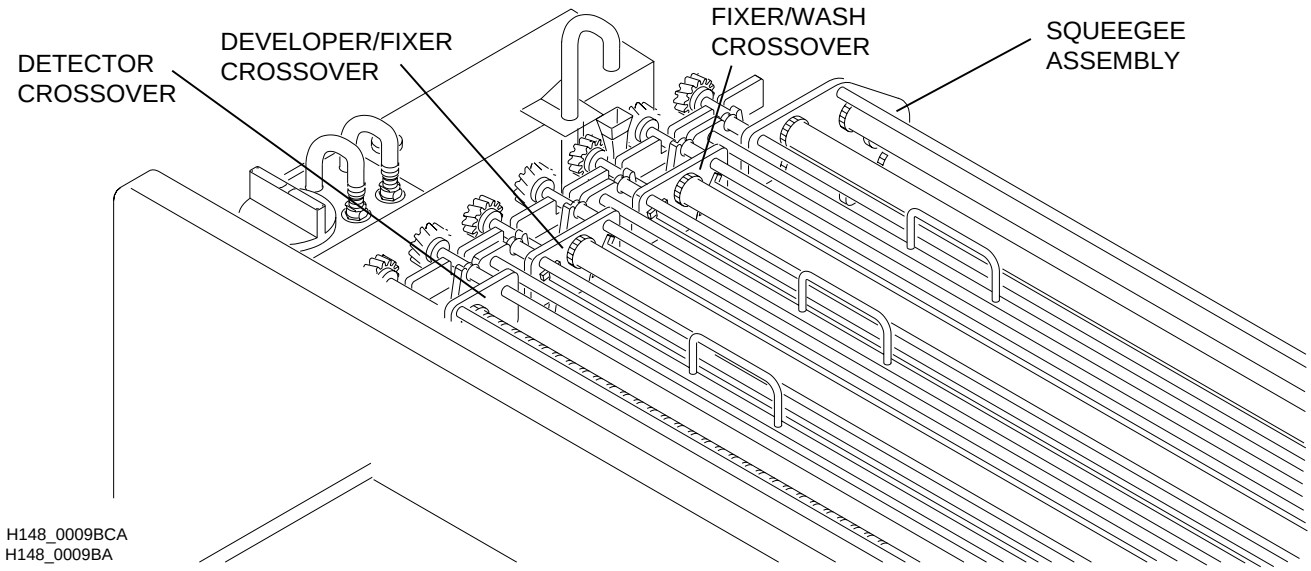

[2] Install:

- DEVELOPER/FIXER CROSSOVER
- FIXER/WASH CROSSOVER
- DETECTOR CROSSOVER
- SQUEEGEE ASSEMBLY

[3] Check that the CROSSOVERS and SQUEEGEE ASSEMBLY are fuly seated.

[4] Install the YOKE between the DEVELOPER/FIXER and FIXER/WASH CROSSOVERS on the nondrive end of the CROSSOVERS. See the figure below and the one on Page 19.

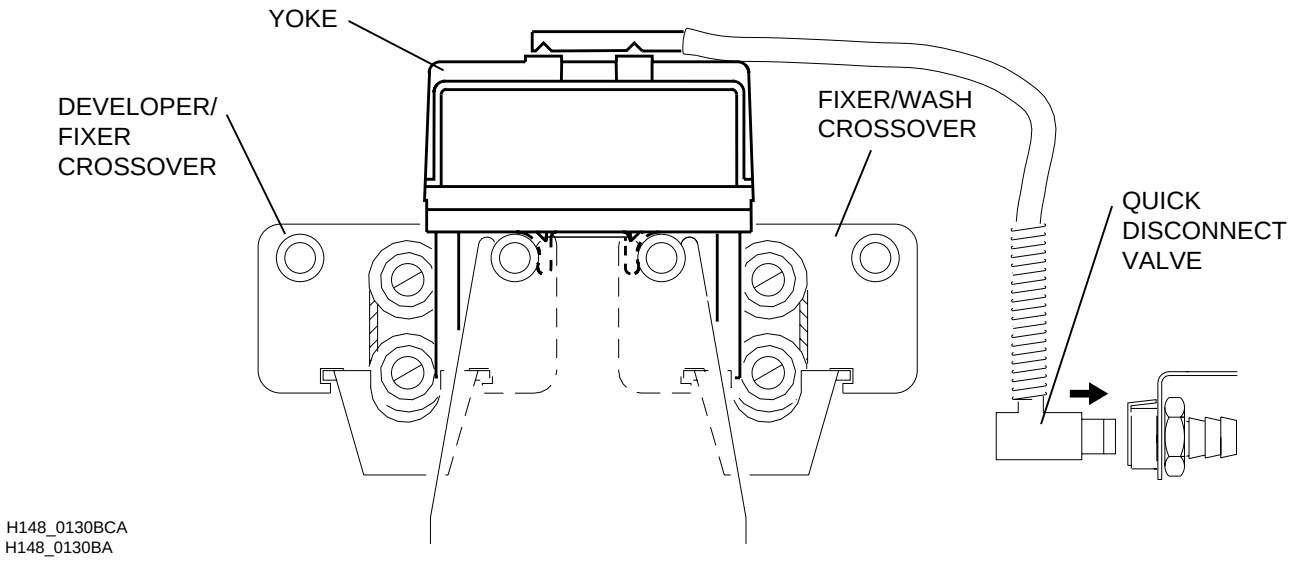

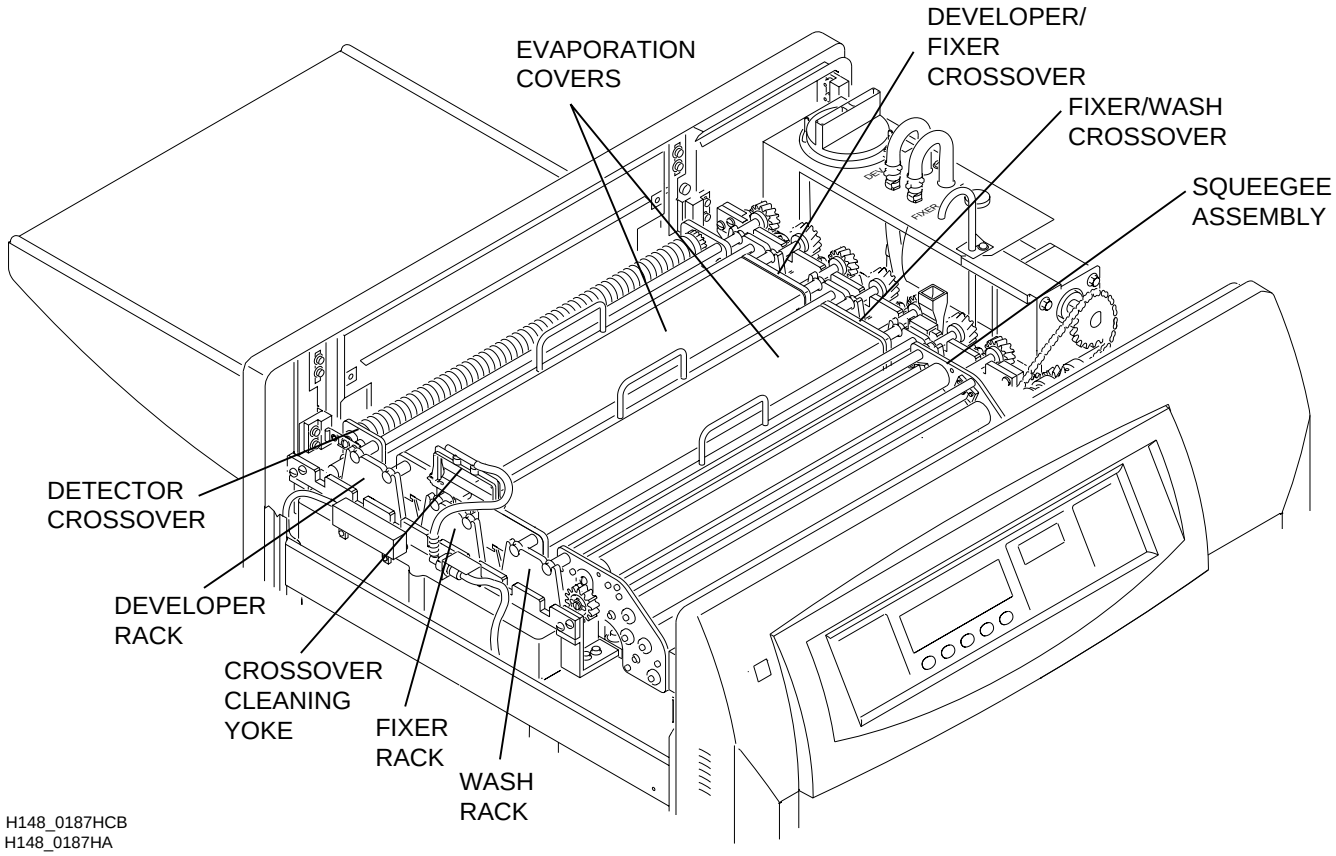

[5] Install the 2 EVAPORATION COVERS on the DEVELOPER/FIXER and FIXER/WASH CROSSOVERS.

[6] Check that the EVAPORATION COVERS are correctly seated, with correct clearance on the nondrive side for the YOKE.

Section 3: Connecting the PROCESSOR

Making the Electrical Connections

Connecting the JUMPERS at TB2 and TB3 and the Wires to TB1

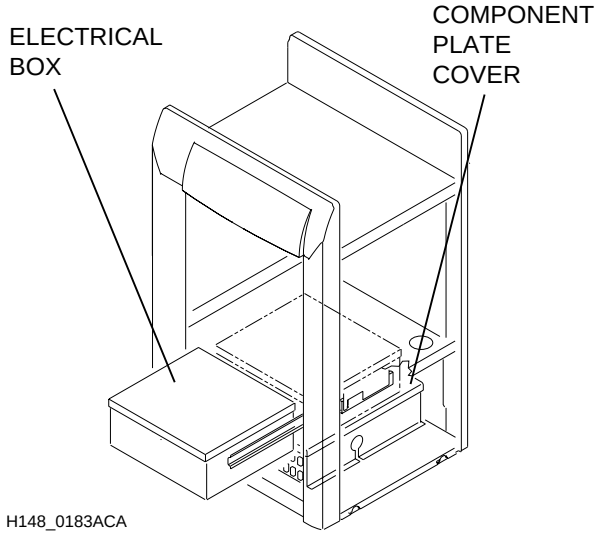

H148_0183ACA
H148_0183AA

[1] Extend the ELECTRICAL BOX.

[2] Remove the COMPONENT PLATE COVER.

[3] Determine the supply voltage to be applied to the PROCESSOR.

[4] Install the correct ELECTRIC SERVICE LABEL from the PREPACK onto the DATA PLATE.

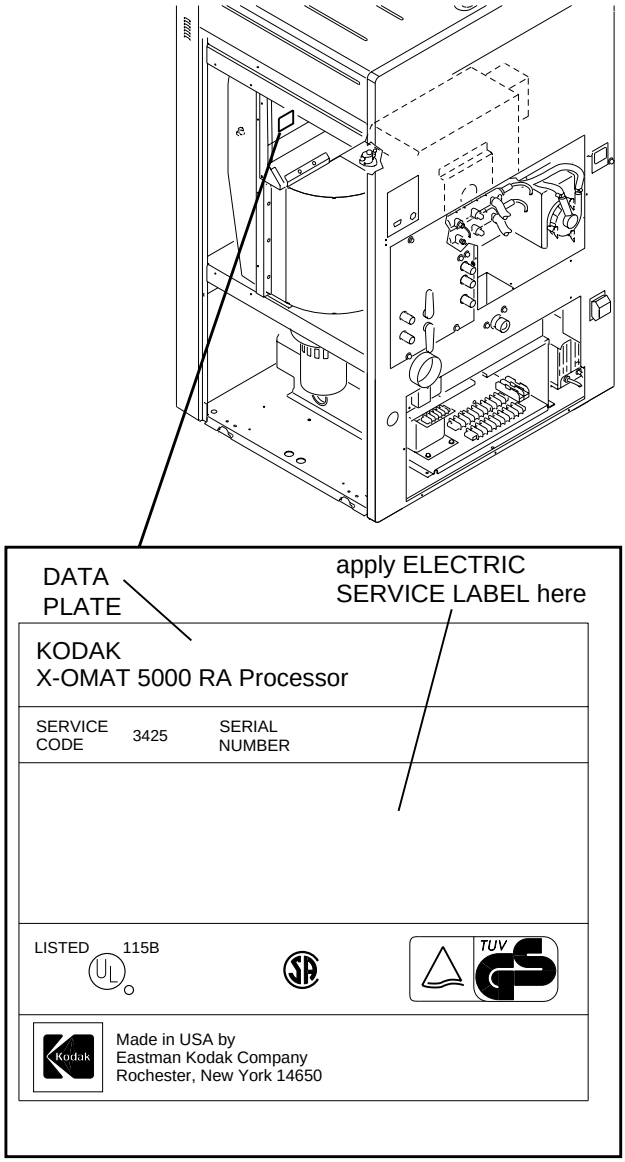

H148_0185CCA
H148_0185CA

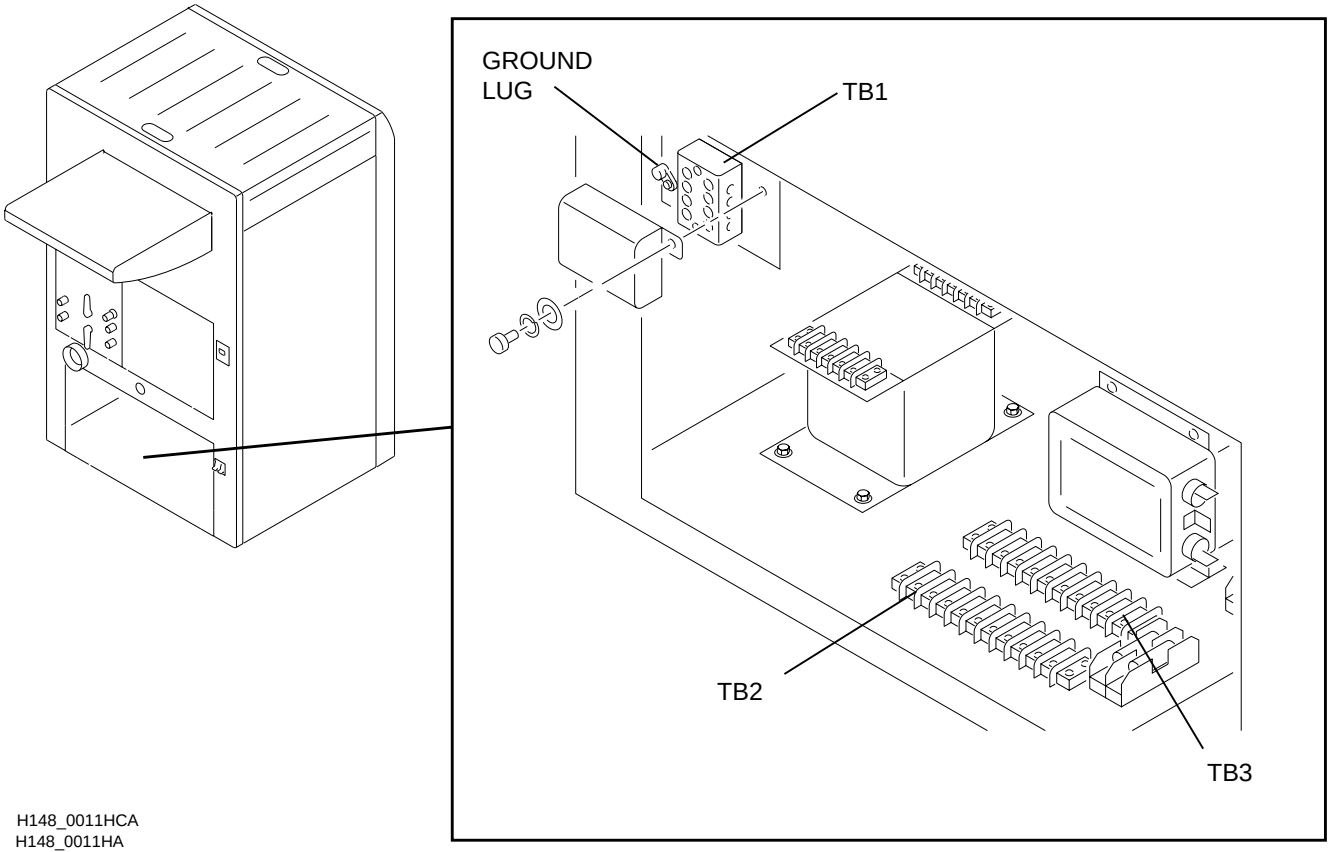

H148_0011HCA
H148_0011HA

[5] Using the “Supply Voltage Connection Tables” on Pages 22 through 27, connect:

(a) METAL JUMPERS from the PREPACK

(b) WIRE JUMPERS from the PREPACK

Warning

Dangerous Voltage

[6] Move the wall power switch to the “OFF” position.

[7] Using the “Supply Voltage Connection Tables” on Pages 22 through 27, connect the main input power wires to TERMINAL STRIP TB1 and to the GROUND LUG. Wiring must meet all local codes.

[8] Move the ELECTRICAL BOX into the PROCESSOR.

Connecting the Wires to TERMINAL STRIP TB1

Supply Voltage Connection Tables

POWER SYSTEM	NOMINAL SUPPLY VOLTAGE	FREQUENCY (Hz)	CONNECTION DIAGRAM
5 Wire L1,L2,L3,N & Earth Ground 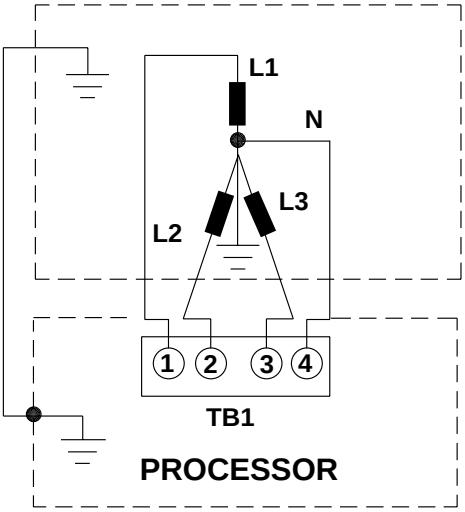	120/208	60 SEE NOTE	A
	127/220	50 SEE NOTE	B
	220/380	50 SEE NOTE	K
	230/400	50 SEE NOTE	L
	240/415	50 SEE NOTE	M
3 Wire L1,L2, or N & Earth Ground 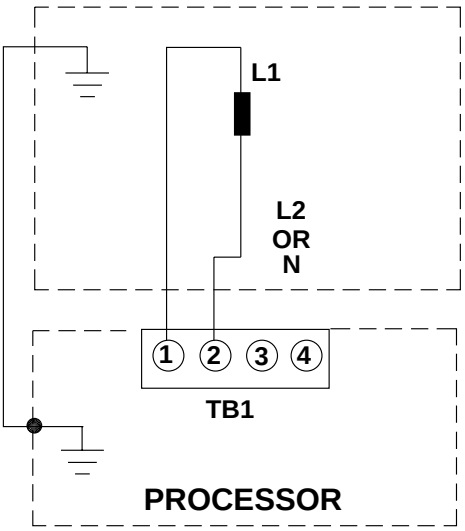	200	50/60 SEE NOTE	C
	220	50/60 SEE NOTE	D
	230	50/60 SEE NOTE	E
	240	50/60 SEE NOTE	F

H148_9000EC

Supply Voltage Connection Tables, Continued

POWER SYSTEM	NOMINAL SUPPLY VOLTAGE	FREQUENCY (Hz)	CONNECTION DIAGRAM
4 Wire L1,L2,N & Earth Ground 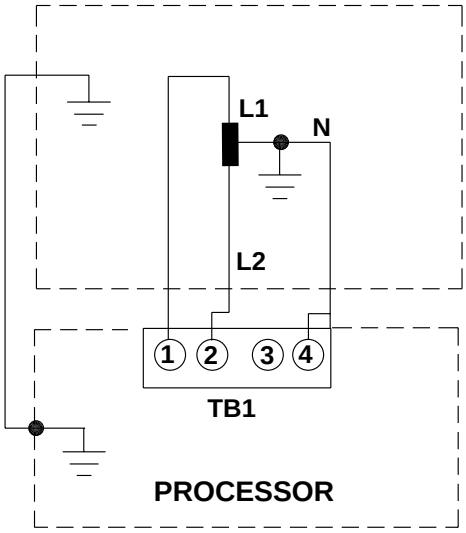 	100/200	50/60 SEE NOTE	G
	120/240	50/60 SEE NOTE	H
4 Wire L1,L2,L3 & Earth Ground 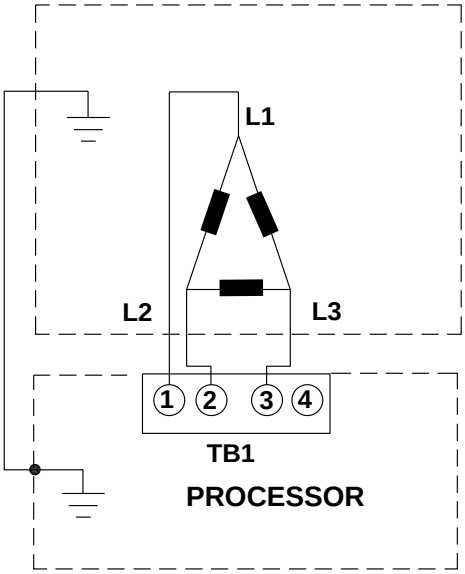 	200	50/60 SEE NOTE	J

H148_9001EC

Supply Voltage Connection Tables, Continued

POWER SYSTEM	NOMINAL SUPPLY VOLTAGE	FREQUENCY (Hz)	CONNECTION DIAGRAM
4 Wire L1,L2,N & Earth Ground 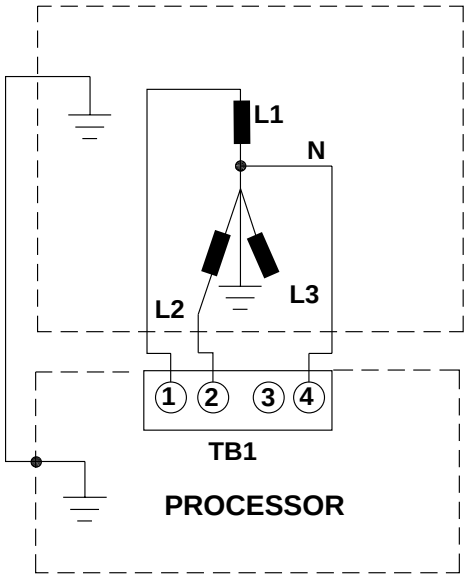 	120/208	60 SEE NOTE	N
	127/220	50 SEE NOTE	O
	220/380	50 SEE NOTE	P
	230/400	50 SEE NOTE	R
	240/415	50 SEE NOTE	S

H148_9002EC

Supply Voltage Connection Tables, Continued

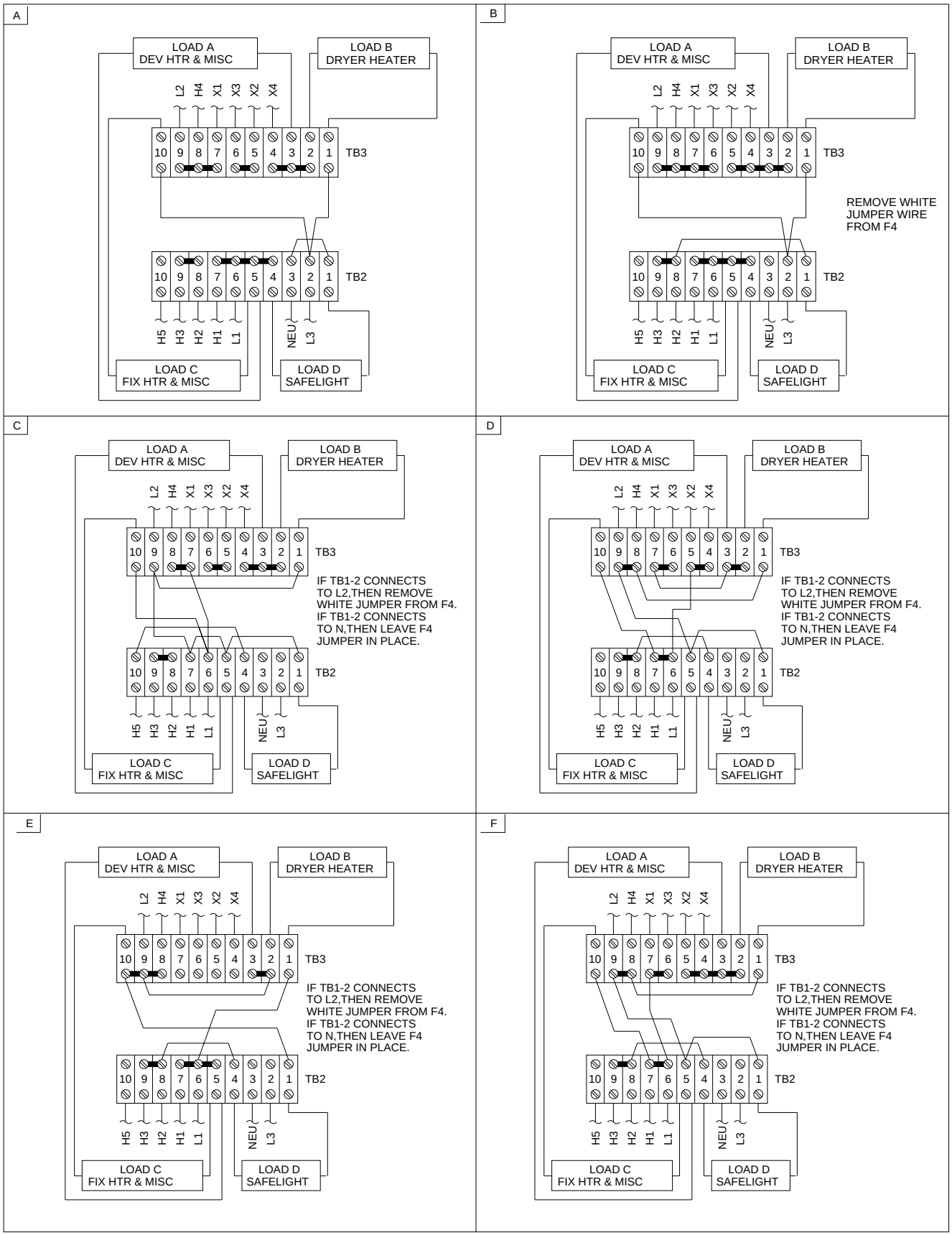

H148_9003EC

Supply Voltage Connection Tables, Continued

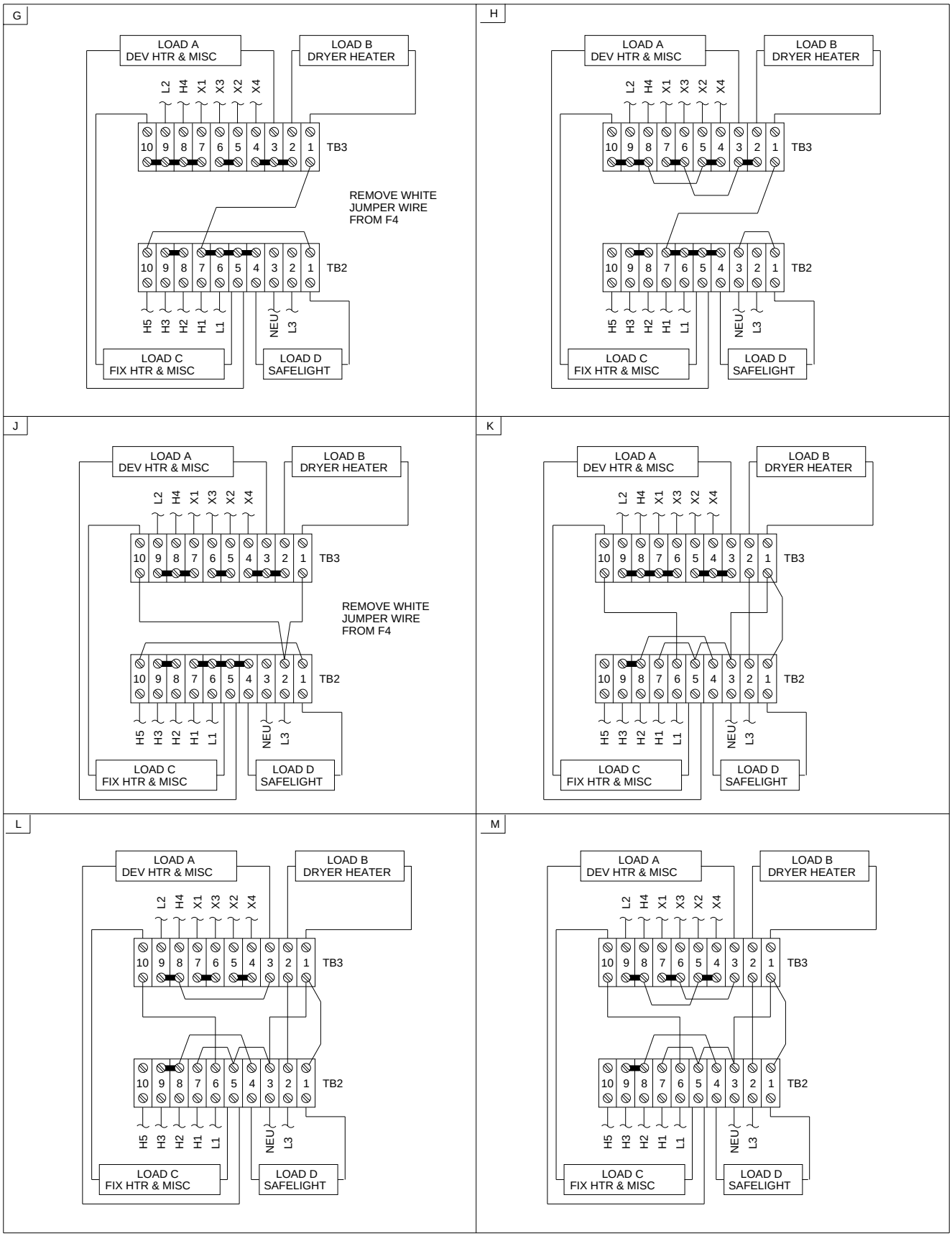

H148_9004EC

Supply Voltage Connection Tables, Continued

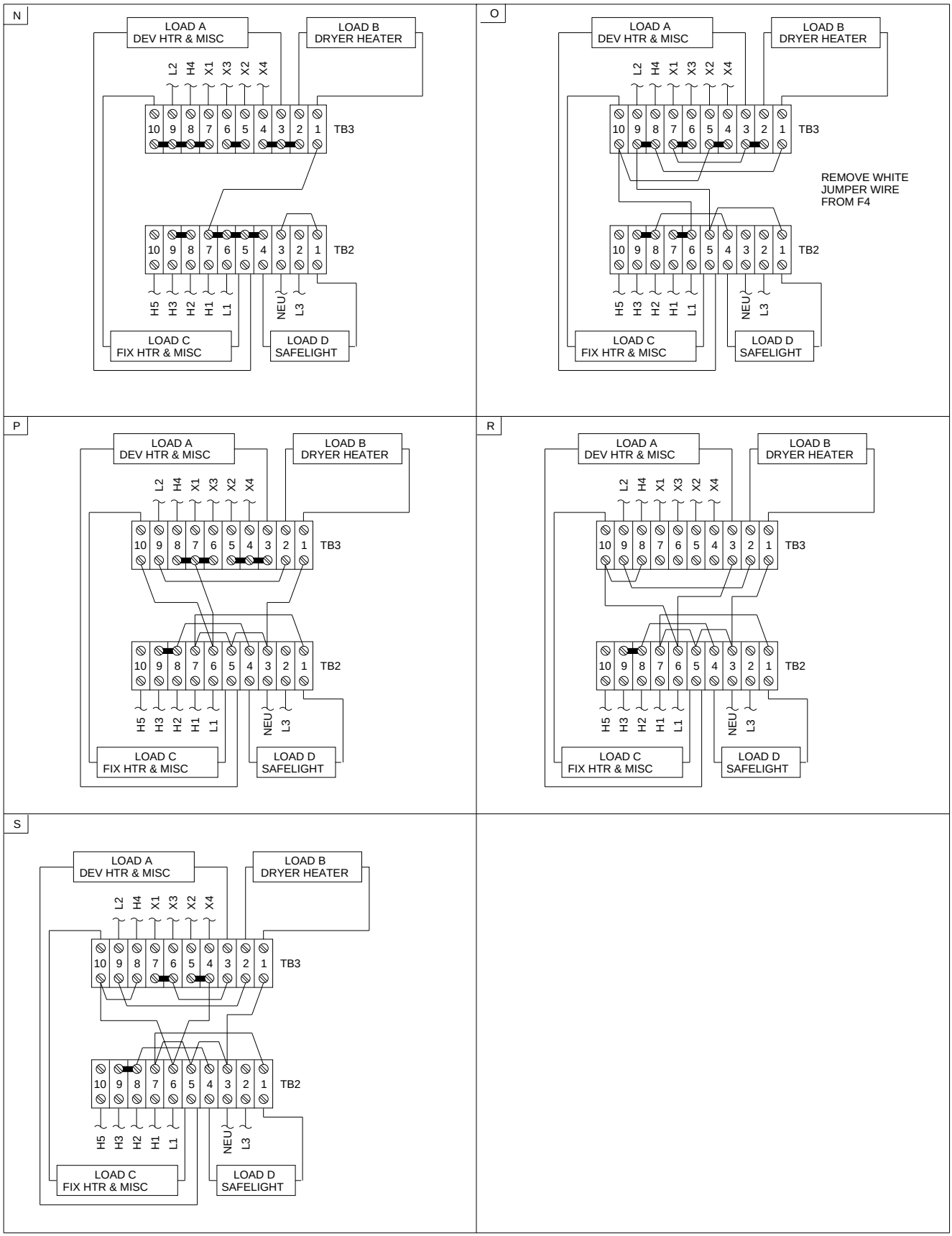

H148_9005EC

Changing the PROCESSOR to 50 Hz Operation

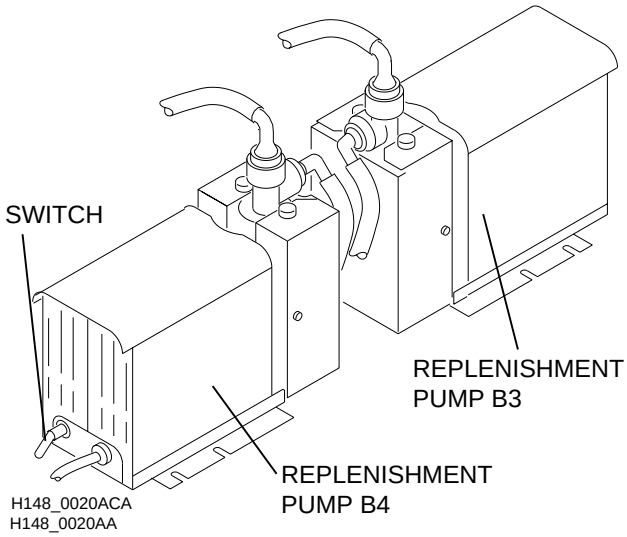

The PROCESSOR is shipped for 60 Hz operation. For 50 Hz operation, pull out and move the SWITCHES to the 50 Hz position at the back of both REPLENISHMENT PUMPS B3 and B4.

Making the Plumbing Connections

Installing the DEVELOPER FILTER

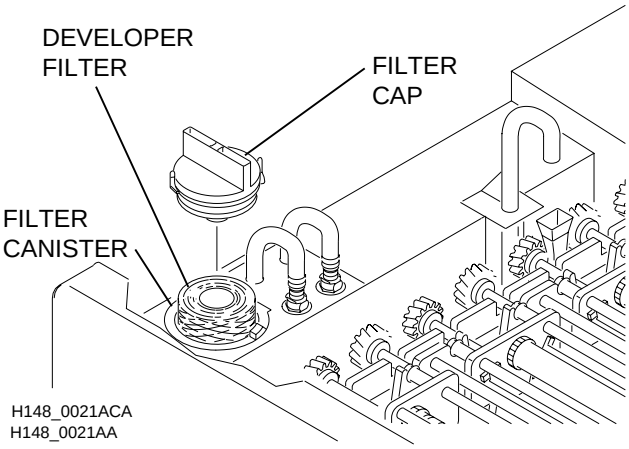

[1] Remove the FILTER CAP.

[2] Carefully place a new DEVELOPER FILTER into the FILTER CANISTER.

[3] Install the FILTER CAP.

Connecting the Drains

The PROCESSOR can drain developer, fixer, and water separately. The PROCESSOR is shipped with a separate FIXER OVERFLOW/TANK DRAIN, AUXILIARY FIXER TANK DRAIN, DEVELOPER OVERFLOW/TANK DRAIN, and AUXILIARY DEVELOPER TANK DRAIN.

Warning

- DRAINS must be made of chemically resistant, non-corrosive material. Use PVC or equivalent.
- The DRAIN must have a minimum diameter of 7.6 cm (3 in.) and be free of obstruction.
- Drain service must comply with all local codes.
- The HOSES must slope gradually down to the DRAIN.
- To prevent possible biological growth, do not allow the drain TUBES to touch the FLOOR DRAIN.

[1] Remove the three 1.9 cm (3/4 in.) HOSES from the PREPACK CARTON. Connect the 3 HOSES to the DEVELOPER, FIXER, and WASH WATER DRAINS on the feed end of the PROCESSOR.

[2] Route the tubing as required to comply with local codes for disposing of wash water that contains photographic chemicals. Do not make a solid connection between the WASH WATER DRAIN and the FLOOR DRAIN.

Connecting the Water

Important

Before doing these steps, see the Site Specifications for information about water pressure and materials.

[1] Install the plumbing to the WATER SUPPLY FITTING.

[2] Check that the FIXER and DEVELOPER DRAIN VALVES are closed.

Making the Drain and Water Connections

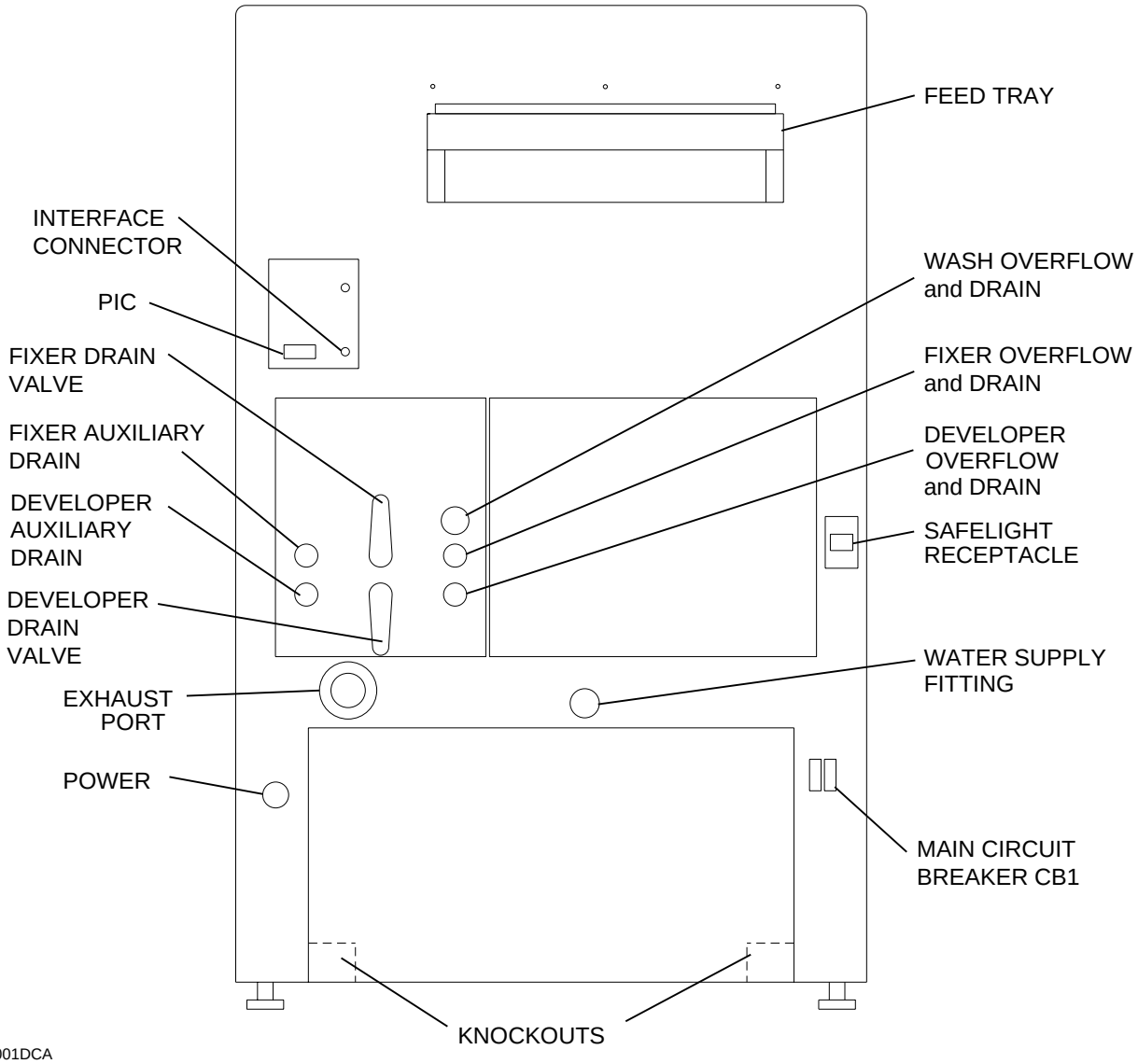

H148_0001DCA
H148_0001DA

Connecting the REPLENISHMENT TUBES

Caution

- Prevent contaminating the processing solutions. Do the following procedure to connect the DEVELOPER REPLENISHMENT TUBE to the DEVELOPER REPLENISHMENT TANK, **then**, do the same procedure to connect the FIXER REPLENISHMENT TUBE.
- Use only thick-walled TUBING because the REPLENISHMENT PUMPS cause high suction.

[1] Locate the left or right KNOCKOUT in the feed end of the PROCESSOR, that you need to use for the REPLENISHMENT TUBES. Remove the KNOCKOUT.

[2] Insert the REPLENISHMENT TUBE through the KNOCKOUT.

Note

The REPLENISHMENT TUBES are not provided with the PROCESSOR.

Connecting the REPLENISHMENT TANKS

Important

- Because this PROCESSOR has very high pumping rates, check that the TUBES are not bent or do not have obstructions.
- Connect the developer REPLENISHMENT TUBE first, **then**, connect the fixer REPLENISHMENT TUBE.

[1] Install one end of the STRAINER into the TUBE from the REPLENISHMENT TANK.

[2] Install the other end of the STRAINER into the TUBE to the PROCESSOR.

[3] Connect the TUBE to the REPLENISHMENT INLET on the REPLENISHMENT PUMP.

[4] After following the above procedures for the installation of the developer REPLENISHMENT TUBE, do the above procedures again for the installation of the fixer REPLENISHMENT TUBE.

Installing the REPLENISHMENT TUBES

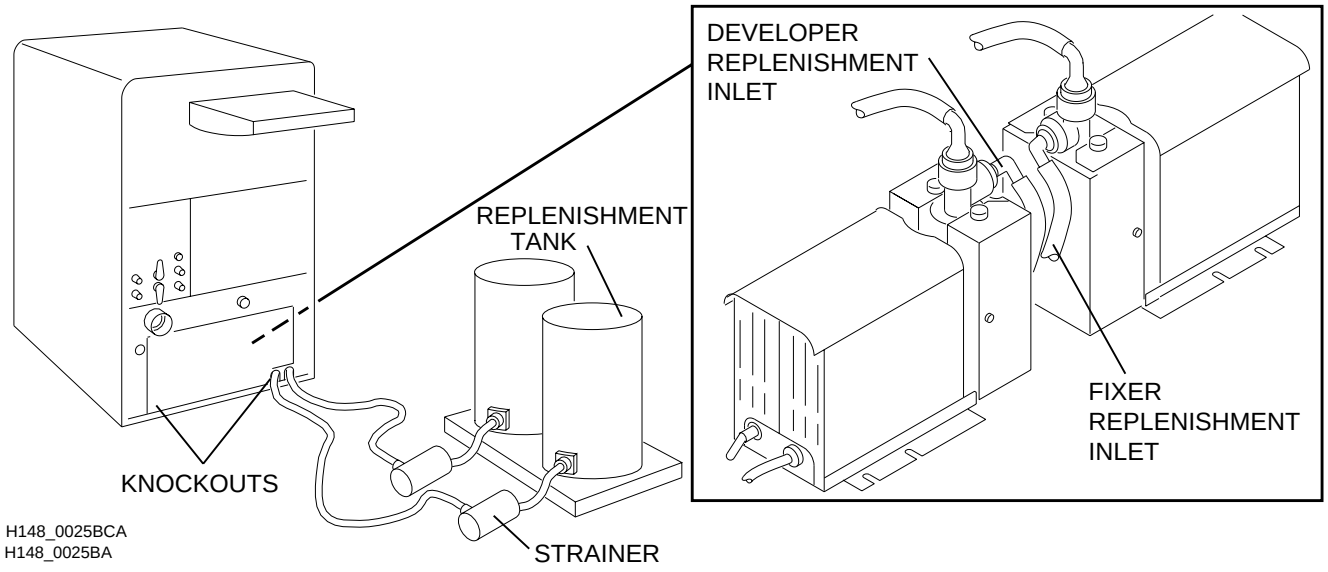

Measuring the Static Pressure and Making the Exhaust Connections

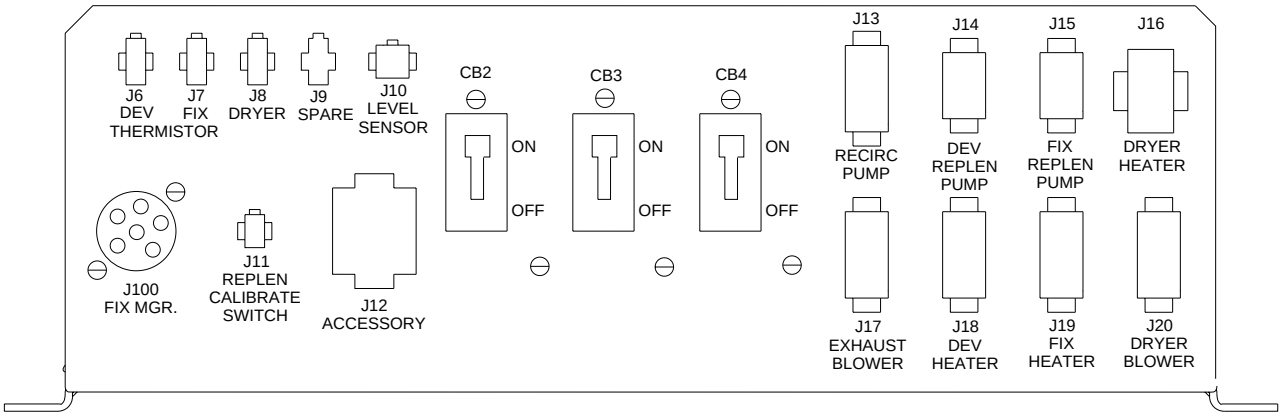

H148_0044BA

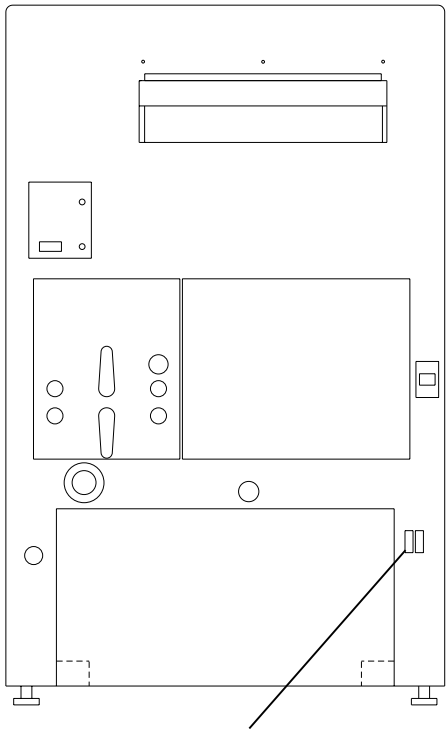

H148_0001GCC
H148_0001GA

Note

For optimum operation of the PROCESSOR, do this procedure.

[1] With the PROCESSOR de-energized, disconnect P/J16 and P/J20 from the front of the COMPONENT PLATE.

[2] Energize the PROCESSOR.

- **(a)** Move the wall CIRCUIT BREAKER to the “ON” position.
- **(b)** Move the MAIN CIRCUIT BREAKER CB1 on the PROCESSOR to the “ON” position.

[3] Check that the EXHAUST BLOWER actuates.

[4] Connect the RUBBER HOSE to the CENTER CONNECTOR of the AIR METER TL-2431. Do not connect the L TUBE to the RUBBER HOSE.

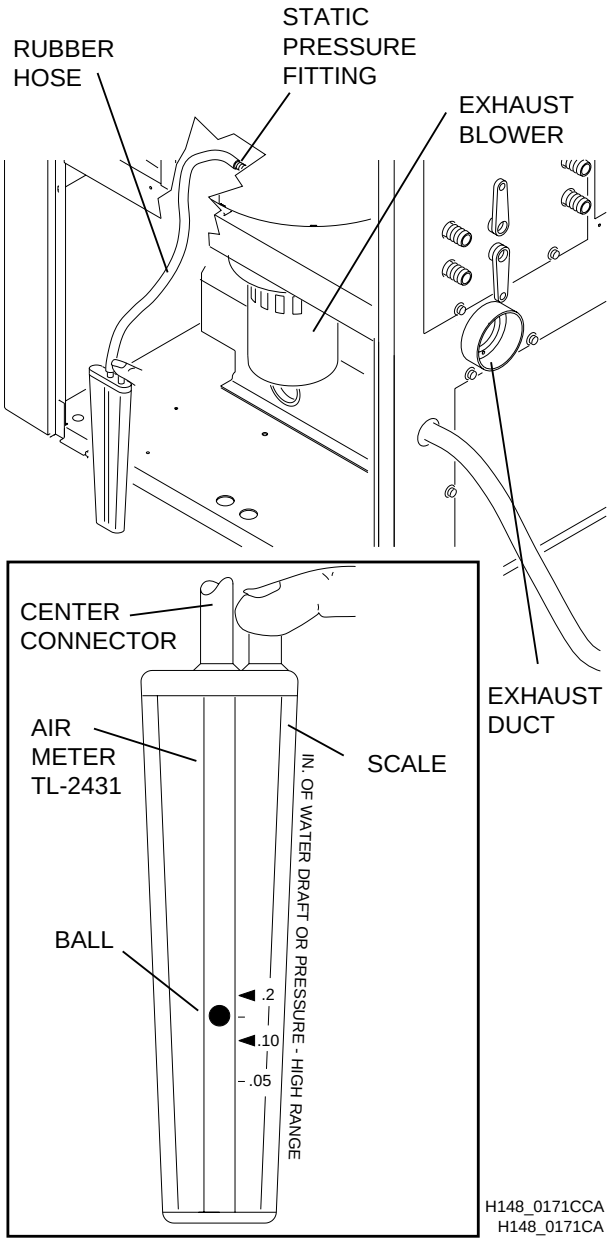

[5] Connect the other end of the RUBBER HOSE to the STATIC PRESSURE FITTING on the PROCESSOR.

[6] Hold your finger over the other CONNECTOR on the AIR METER, and hold the AIR METER vertically.

[7] Record the static pressure on the “In. of Water Draft or Pressure-High Range” SCALE on the AIR METER.

[8] Connect the EXHAUST DUCT to the PROCESSOR.

(a) Connect 7.6 cm (3 in.) rigid DUCT or flexible EXHAUST HOSE between the EXHAUST DUCT on the PROCESSOR and the BUILDING EXHAUST DUCT.

Note

Do not make a solid connection at the BUILDING EXHAUST DUCT.

[9] Adjust the gap between the BUILDING EXHAUST DUCT and the EXHAUST DUCT from the PROCESSOR, until the static pressure matches the pressure recorded in Step 7.

If you cannot match the pressure recorded above, adjust the gap until the pressure is at least 1/2 of the pressure recorded in Step 7.

If you cannot obtain a static pressure of a minimum of 1/2 of the pressure recorded in Step 7, install an AUXILIARY FAN. See Page 34. For example, if the pressure measured without the EXHAUST HOSE connected to the PROCESSOR = 0.15 in., the pressure with the EXHAUST HOSE connected to the PROCESSOR must be at least 0.075 in.

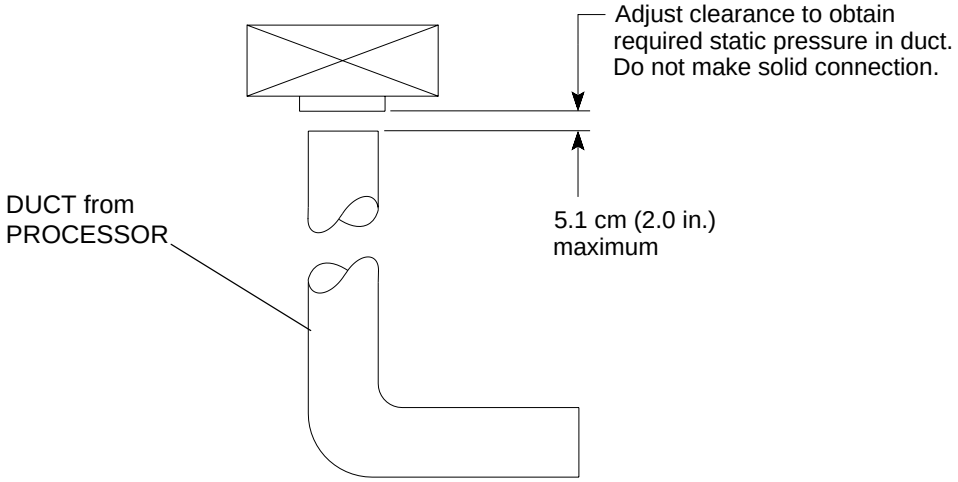

Installing an AUXILIARY VENTILATION FAN KIT

If the site does not meet the ventilation specification, you can install a *Kodak* AUXILIARY VENTILATION FAN KIT 264503. See the figure below. An AIR GAP ASSEMBLY is provided with the KIT. If it is necessary to order an AIR GAP ASSEMBLY separately, order Part No. 264519.

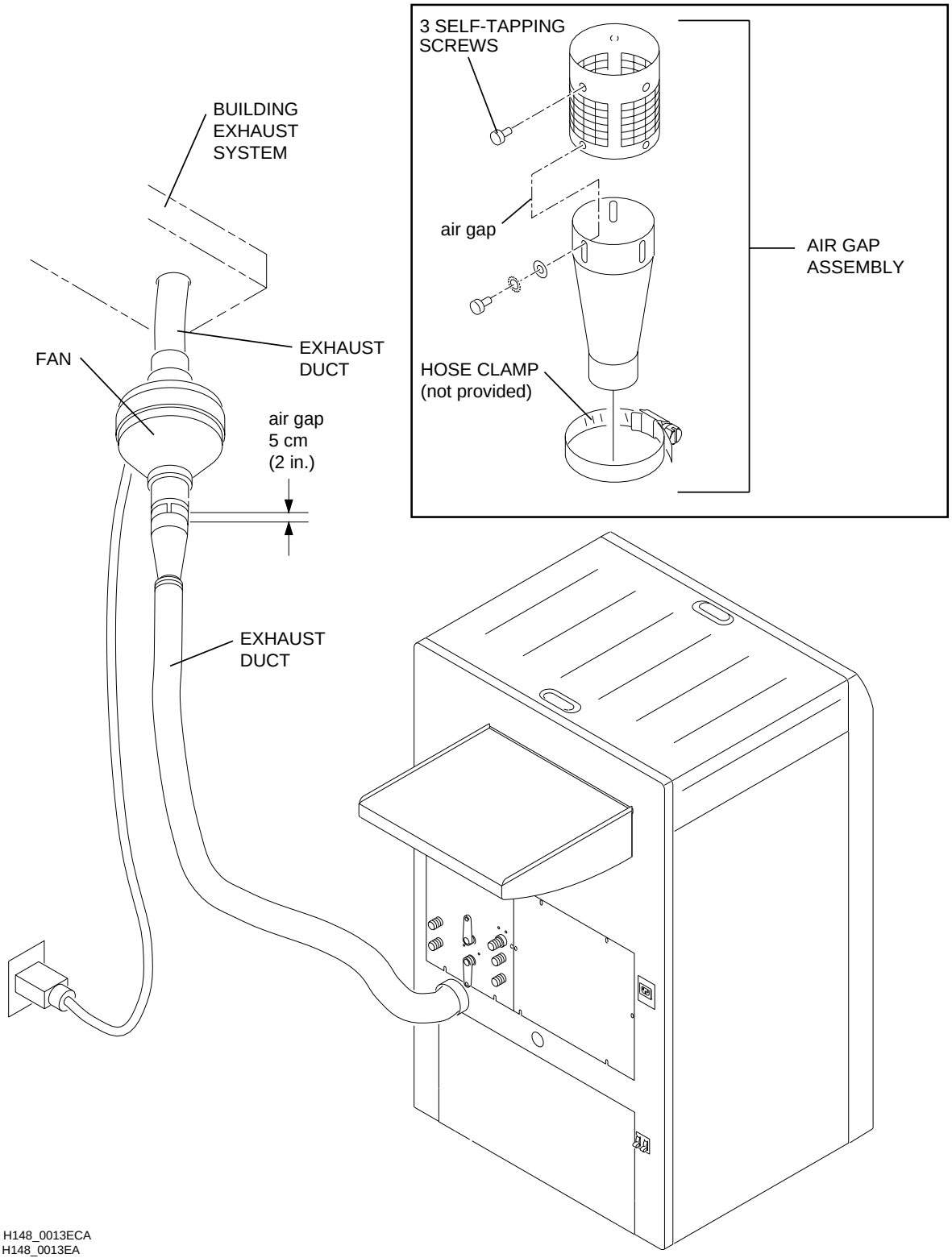

Section 4: Installing and Adjusting the FEED TRAY

Installing the FEED TRAY

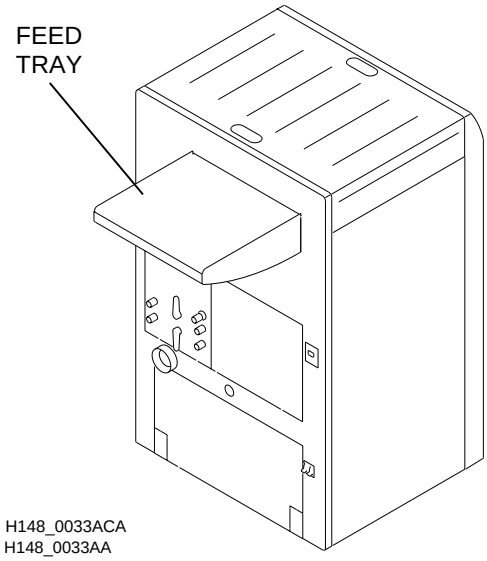

[1] Install the FEED TRAY with the 5 SCREWS. Do not tighten the SCREWS.

[2] Install the FILM GUIDE with the 3 WING NUTS.

Installing the FEED TRAY and the FILM GUIDE

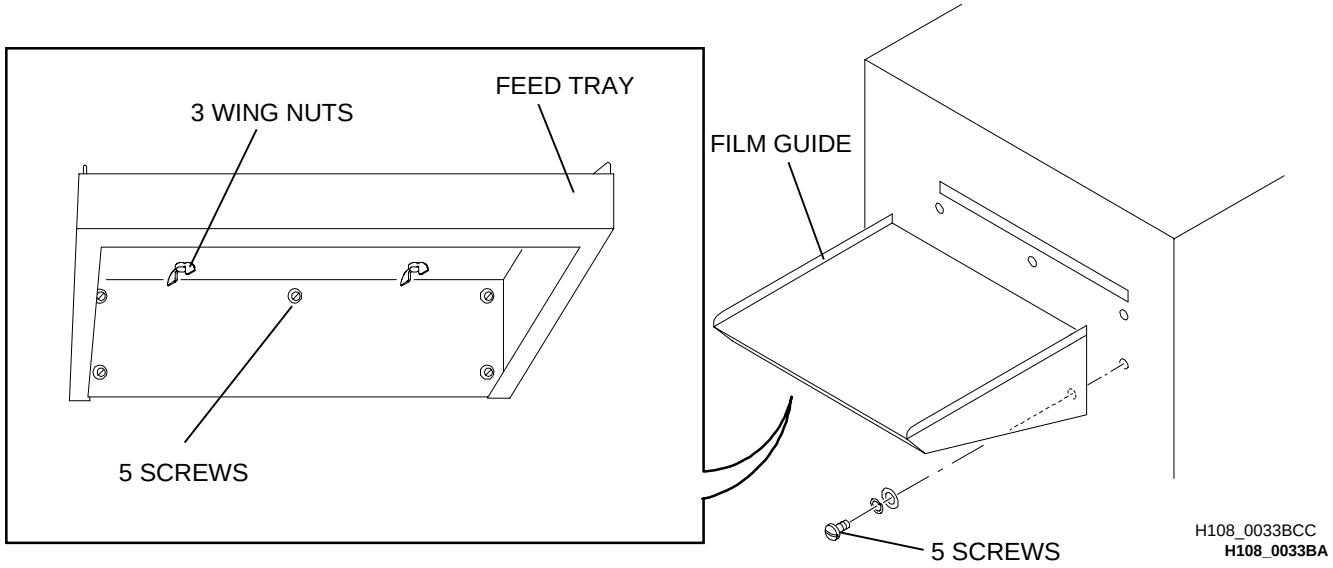

Adjusting the Height of the FEED TRAY

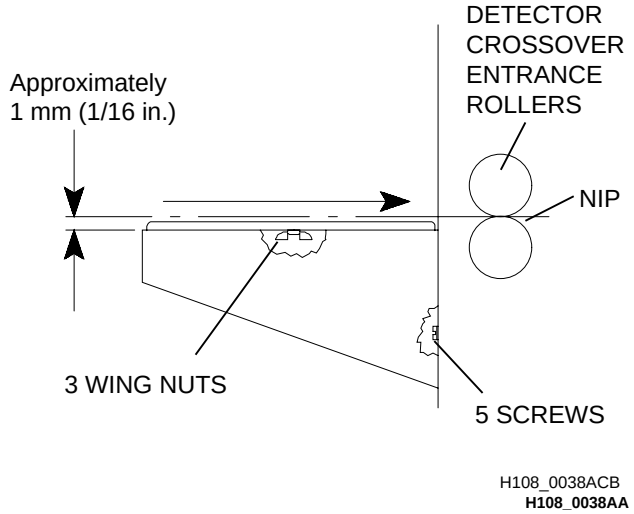

[1] Adjust the position of the FEED TRAY so that it is approximately 1 mm (1/16 in.) lower than and parallel to the NIP of the DETECTOR CROSSOVER ENTRANCE ROLLERS.

[2] When the height is adjusted correctly, tighten the 5 SCREWS as shown.

Note

Do not tighten the WING NUTS.

Aligning the FILM GUIDE

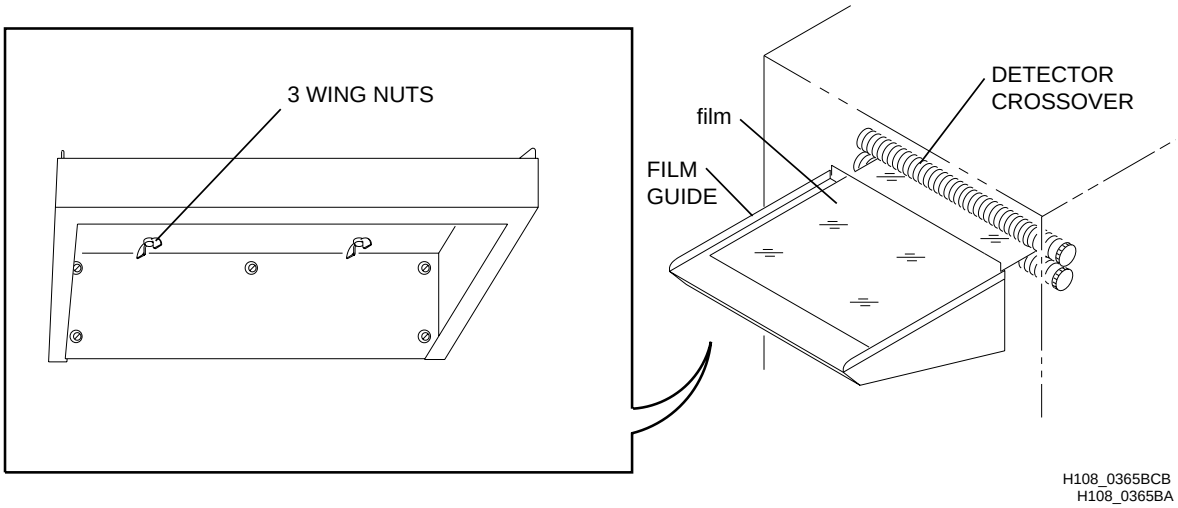

For optimum accuracy of the Film Logging feature, align the FILM GUIDE, by doing the following steps:

[1] Check for correct operation of the 6000 FILM ACCUMULATOR BOARD, by entering diagnostics and selecting the following. See also the Diagnostics Manual, Publication Part No. 5B6342.

GO TO SETUP and enter the Access Code

MORE

INFO

DIAG

MORE

MORE

FILM ACCUMUL

LED/DET

[2] If a “?” is displayed, check that the 6000 BOARD HOUSING is free of dirt or chemical deposits.

(a) Clean if necessary with a clean, damp synthetic sponge.

(b) Check again for correct operation. If not, install a new 6000 BOARD.

Note

For correct Film Logging, all 22 LEDs must operate correctly. A “?” displayed during the Film Accumulator Test indicates a malfunctioning LED. A “+” displayed indicates a correctly operating LED.

Film Width cm	Film Width inches	LEDs Covered
10 cm	4 in.	5
	5 in.	6
	6.5 in.	8
18 cm	7 in.	9
	8 in.	10
	8.5 in.	11
24 cm		12
	10 in.	13
	11 in.	14
30 cm	12 in.	15
35 cm	14 in.	18
40 cm		20
43 cm	17 in.	22

[3] Chose a sheet of film of the size most often processed, and place it on the FILM GUIDE with the edge of the film aligned along the nondrive edge of the FILM GUIDE.

[4] Adjust the FILM GUIDE until the correct number of LEDs or “+” pluses for that size of film are displayed. See the table at the left.

[5] Move the film to the drive side edge of the FILM GUIDE and do Step 4 again.

[6] Check that this adjustment is correct by doing Steps 3 - 5 for each film size to be processed in this PROCESSOR.

[7] Tighten the WING NUTS.

[8] Exit diagnostics.

Note

To ensure accuracy of the Film Logging feature, check the operation of the 6000 FILM ACCUMULATOR BOARD monthly, using the diagnostics.

Checking for the Correct Position of the LIGHT SHIELD

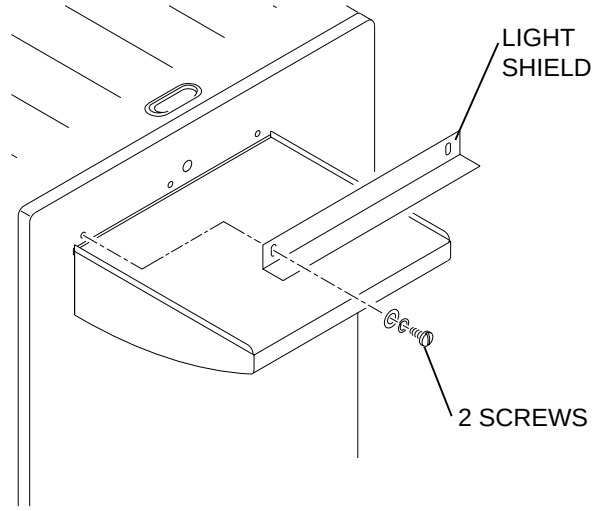

H148_0022ACA
H148_0022AA

Note

- The SCREWS, WASHERS, and LOCK WASHERS are provided in the PREPACK CARTON.
- The LIGHT SHIELD is not necessary if attaching an accessory, such as a *Kodak* MULTILOADER or a *Kodak* AUTOMATIC FILM FEEDER, to the PROCESSOR.
- If **not installing** the LIGHT SHIELD, advance to Page 39.

[1] Align the holes in the LIGHT SHIELD with the holes for the 2 SCREWS.

[2] Install the 2 LOCK WASHERS, WASHERS, and SCREWS through the LIGHT SHIELD and into the PROCESSOR.

Section 5: Checking the System

Checking for Leakage

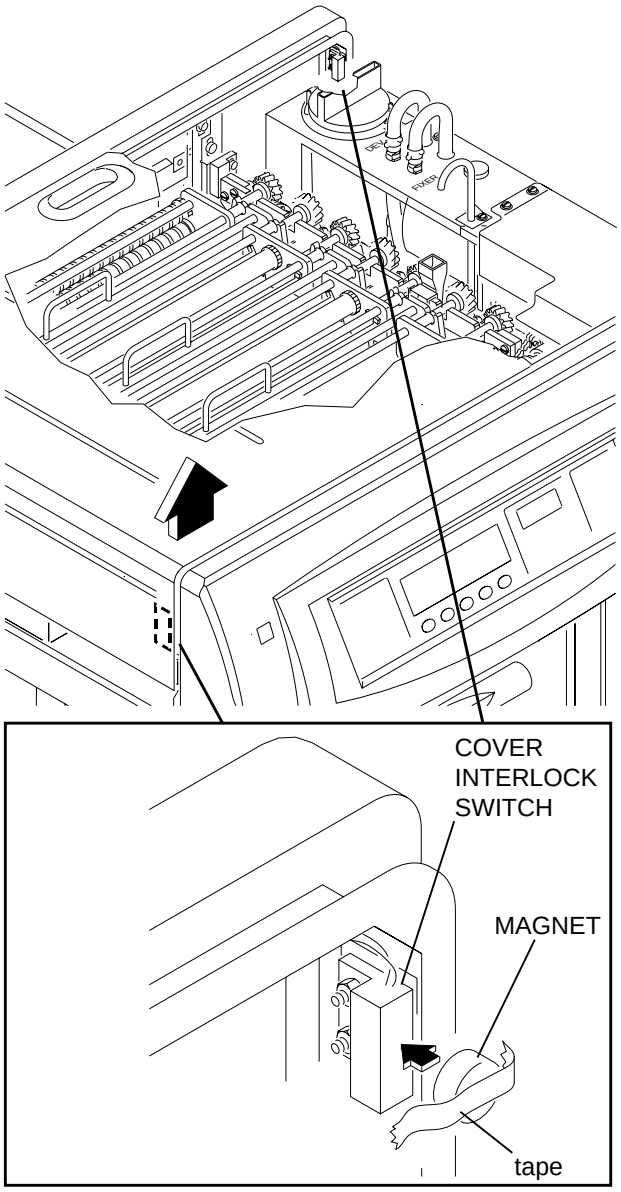

H148_0161CCA
H148_0161CA

Caution

To allow correct operation of the LEVEL PROBES, check that the level of the solutions is equal at both the drive and nondrive sides of the DEVELOPER and FIXER TANKS. The solution must cover the LEVEL PROBES, located on the nondrive side, at the top edge of the TANK ASSEMBLY. When the LEVEL PROBES are not covered with solution, error codes E032 “Developer tank fill error“ and E033 “Fixer tank fill error“ can occur and replenishment solutions are wasted.

[1] Fill the DEVELOPER, FIXER, and WASH TANKS to the overflow level with water.

[2] Use a magnet to deactuate the COVER INTERLOCK SWITCHES on the edges of the PROCESSOR.

[3] To provide for conduction of the LEVEL PROBES:

- **(a)** Add 90 mL (3 fluidounces) of developer to the DEVELOPER TANK.
- **(b)** Add 90 mL (3 fluidounces) of fixer to the FIXER TANK.

[4] Move AUXILIARY CIRCUIT BREAKERS CB2, CB3, and CB4 to the “ON” position.

[5] Move the MAIN CIRCUIT BREAKER CB1 to the “ON” position.

[6] Check the PROCESSOR for leakage in:

- **(a)** RECIRCULATION PUMP FITTINGS
- **(b)** REPLENISHMENT PUMP FITTINGS
- **(c)** TANK FITTINGS
- **(d)** THERMOWELL ASSEMBLIES
- **(e)** external plumbing
- **(f)** DRAIN VALVES

[7] Check that the OVERFLOW HOSES are draining water from the TANKS.

[8] Check that the DEVELOPER REPLENISHMENT TUBE and the FIXER REPLENISHMENT TUBE are connected to the correct plumbing FITTINGS.

[9] Check that the correct REPLENISHMENT PUMP is operating.

Checking Miscellaneous Components

[1] Check that the following components operate:

- **(a)** DRYER BLOWER and HEATER
- **(b)** WATER SUPPLY SOLENOID — Listen for the sound of water entering the PROCESSOR.
- **(c)** EXHAUST BLOWER

Checking the DISPLAY PANEL

[1] Check that the green “Ready” light on the DISPLAY PANEL illuminates after the PROCESSOR has been allowed to warm-up for approximately 15 minutes at 26°C (72°F) ambient conditions and 26°C (72°F) water temperature.

[2] Check that the DEVELOPER temperature illuminated on the DISPLAY PANEL is in the operating range between 35° and 38.3°C (95° and 101°F).

Checking the Transport

Feed one sheet of **processed** 35 x 43 cm (14 x 17 in.) film into the PROCESSOR to check that the transport system and the REPLENISHMENT PUMPS operate correctly.

Section 6: Final Steps

[1] De-energize the PROCESSOR by moving the MAIN CIRCUIT BREAKER CB1 to the “OFF” position.

[2] Drain the TANKS of water by opening the FIXER and DEVELOPER DRAIN VALVES.

[3] Close the FIXER and DEVELOPER DRAIN VALVES.

[4] Install all PANELS and the TOP COVER.

[5] Do the setup procedures in the Operator Manual.

Important

After the PROCESSOR has been in regular use for 1 or 2 days, again check all FITTINGS for leakage. If necessary, tighten any loose connections.

Section 7: Publication History

Print Date	Pub. No.	ECO No.	Affected Pages	File Name	Notes
October 1995	5B6339	2649-029	All	ii3425_1_029.doc	First printing.
January 1996	5B6339	2649-062	Covers	ii3425_1_062.doc	Graphic Unification.
January 1998	5B6339	2649-062	All	ii342500.fm	First CD-ROM printing. Content is identical to January 1996 version; formatting may vary from print version.

Kodak and *X-Omat* are trademarks.

GLOBAL CUSTOMER SERVICE AND SUPPORT

EASTMAN KODAK COMPANY ● ROCHESTER, N.Y. 14650