Section 2: RACKS and CROSSOVERS

Table of Contents

Description	Page
RACKS and CROSSOVERS	2-1
Overview of Transport	2-2
Adjusting the FEED TRAY	2-3
Aligning the FILM GUIDE	2-3
Adjusting the Squareness of the RACKS	2-5
Removing the WASH TROUGHS from the CROSSOVERS	2-6
Adjusting the Squareness of the CROSSOVERS	2-7
Adjusting the CHAIN	2-8
Installing the CHAIN	2-9
Removing the DRIVE ROLLER from the RACK	2-10
Disassembling the TURNAROUND	2-12

Overview of Transport

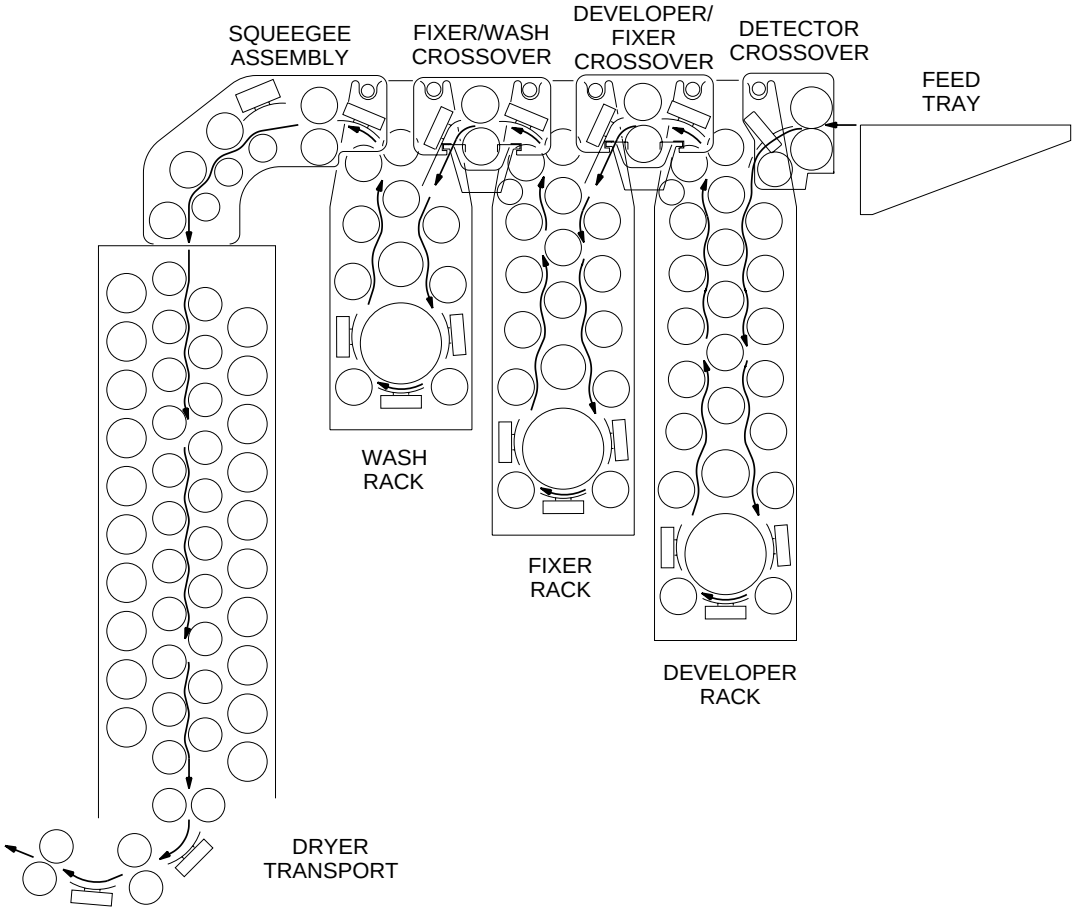

H148_0180DA

Adjusting the FEED TRAY

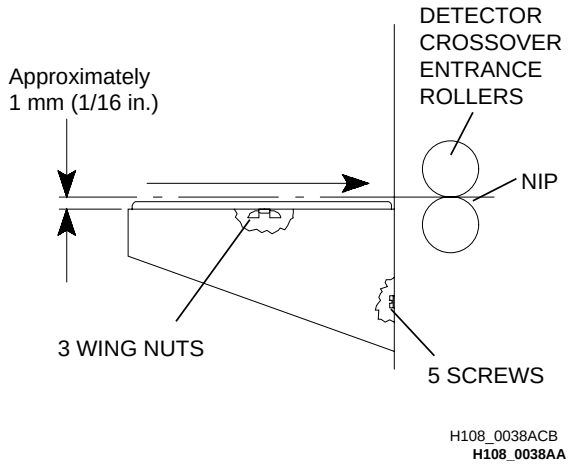

[1] Loosen the 5 SCREWS.

[2] Raise the FEED TRAY to approximately 1 mm (1/16 in.) below and parallel to the NIP.

[3] Tighten the 5 SCREWS.

Aligning the FILM GUIDE

Important

For optimum accuracy of the Film Logging feature,

- All 22 LEDs on the 6000 FILM ACCUMUALTOR BOARD must operate correctly.
- Once a month, enter diagnostics and check that the 6000 BOARD operates correctly.
- The FILM GUIDE must be aligned correctly.

[1] To check for correct operation of the 6000 BOARD, enter the diagnostics.

(a) Select:

"GO TO SETUP" and enter the Access Code

"MORE"

"INFO"

"DIAG"

"MORE"

"MORE"

"FILM ACCUMUL"

"LED/DET"

(b) If the DISPLAY PANEL displays a "?"

- Check for dirt or chemical deposits.
- Clean the 6000 BOARD HOUSING. Use a clean, damp, synthetic sponge.
- Do the test again.
- If necessary, install a new 6000 BOARD.

[2] To align the FILM GUIDE, advance to the next page.

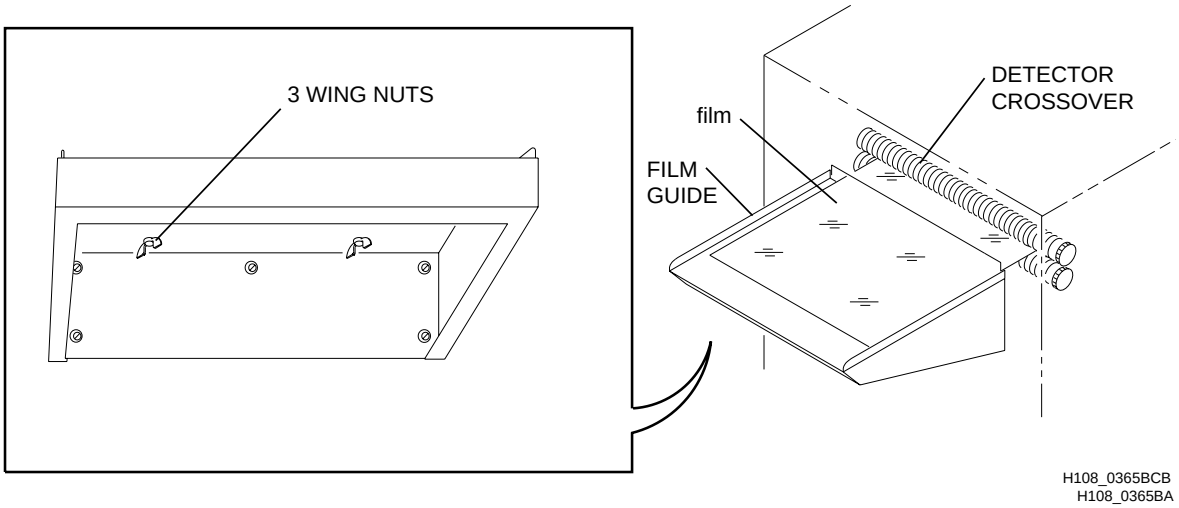

Film Width cm	Film Width inches	LEDs Covered
10 cm	4 in.	5
	5 in.	6
	6.5 in.	8
18 cm	7 in.	9
	8 in.	10
	8.5 in.	11
24 cm		12
	10 in.	13
	11 in.	14
30 cm	12 in.	15
35 cm	14 in.	18
40 cm		20
43 cm	17 in.	22

Important

- If the DISPLAY PANEL displays a “?” during the “Film Accumulator Test” at least one LED malfunctioned.
- A “+” indicates that the LED functions correctly.

[3] To align the FEED TRAY

(a) Loosen the 3 WING NUTS.

(b) Obtain a sheet of film of the size most often processed on the PROCESSOR.

(c) Align the edge of the film against the nondrive edge of the FILM GUIDE and with the NIP of the DETECTOR CROSSOVER ENTRANCE ROLLERS.

(d) Adjust the FEED GUIDE until the film covers the correct number of LEDs for that size of film. See the table at left.

(e) Move the film to the drive side edge of the FILM GUIDE and do Step (d) again.

(f) Check that this adjustment is correct by doing Steps (c) - (e) for each film size to be processed in this PROCESSOR.

(g) Tighten the 3 WING NUTS.

[4] Exit diagnostics.

Adjusting the Squareness of the RACKS

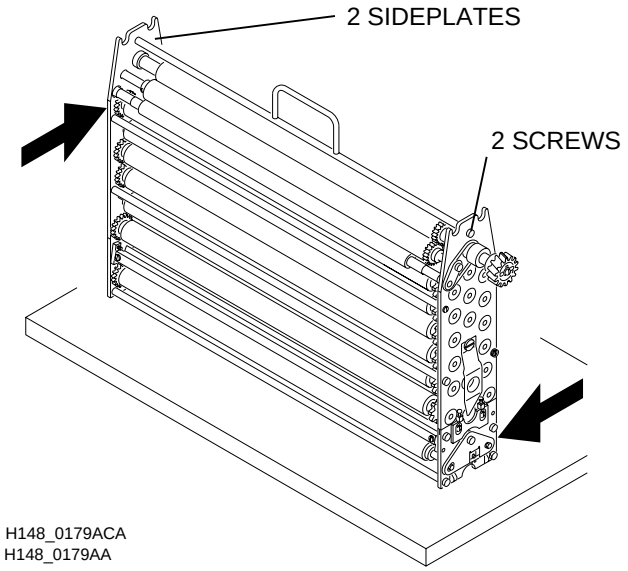

Important

Use this procedure for all 3 RACKS.

[1] Remove the RACK and place it on a flat surface.

[2] Loosen the 2 SCREWS.

[3] Check that the bottom edges of the 2 SIDEPLATES are flush with the flat surface.

[4] If the SIDEPLATES are not flush with the flat surface, leave the RACK on the surface, and:

- **(a)** Hold the RACK at each end as indicated in the diagram at left.
- **(b)** Apply pressure to the SIDEPLATES as indicated in the diagram until the SIDEPLATES are flush with the surface

[5] Tighten the 2 SCREWS.

Removing the WASH TROUGHS from the CROSSOVERS

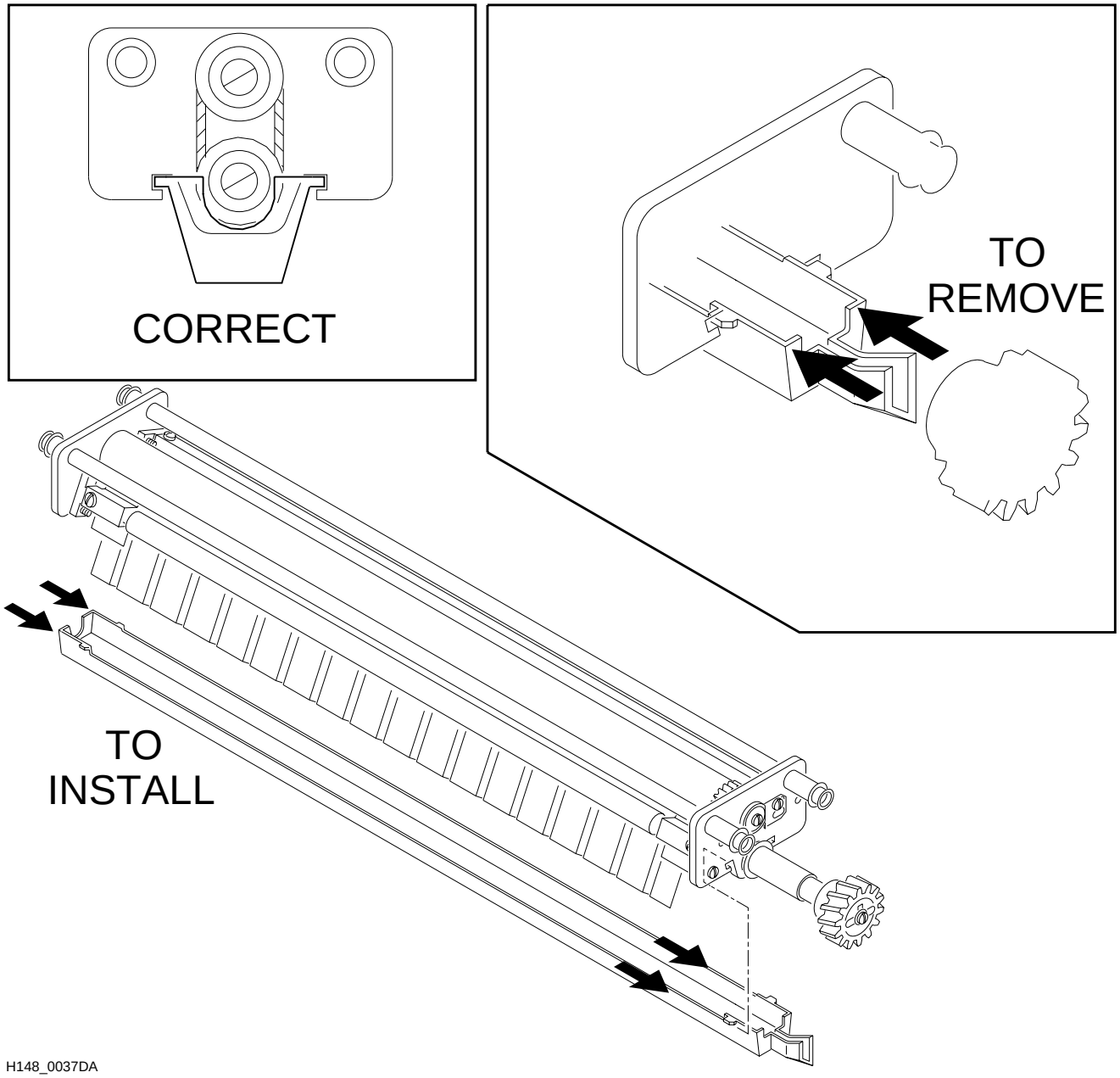

Important

See the bottom of the TROUGH for the arrow indicating the correct direction to push.

[1] To remove or install the TROUGH, move it in the indicated direction.

Adjusting the Squareness of the CROSSOVERS

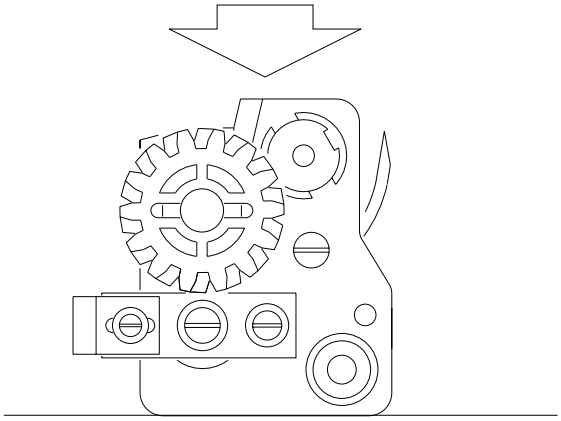

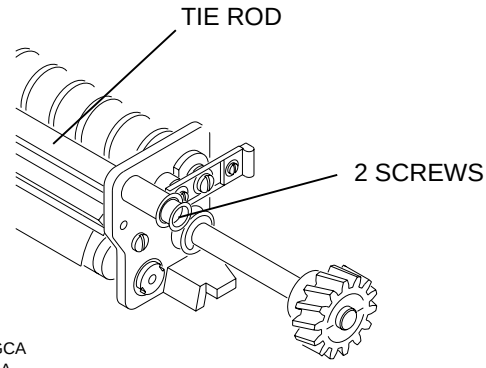

H148_0117GCA
H148_0117GA

Important

Use this procedure for all CROSSOVERS. The diagram at left indicates the DETECTOR CROSSOVER.

[1] De-energize the processor.

[2] Remove the TOP COVER.

[3] Remove the YOKE.

[4] Remove the DETECTOR CROSSOVER ASSEMBLY.

[5] Set the DETECTOR CROSSOVER ASSEMBLY on a flat surface.

[6] Loosen the SCREWS of the TIE RODS.

[7] Check the SIDEPLATES for squareness against the flat surface.

[8] If the SIDEPLATES are not flush with the flat surface, leave the CROSSOVER on the surface, and:

- **(a)** Hold the SIDEPLATE at each end.
- **(b)** Apply pressure to the SIDEPLATES in opposite directions until the SIDEPLATES are flush with the surface.

[9] Tighten the SCREWS.

[10] Do this procedure for each CROSSOVER.

Adjusting the CHAIN

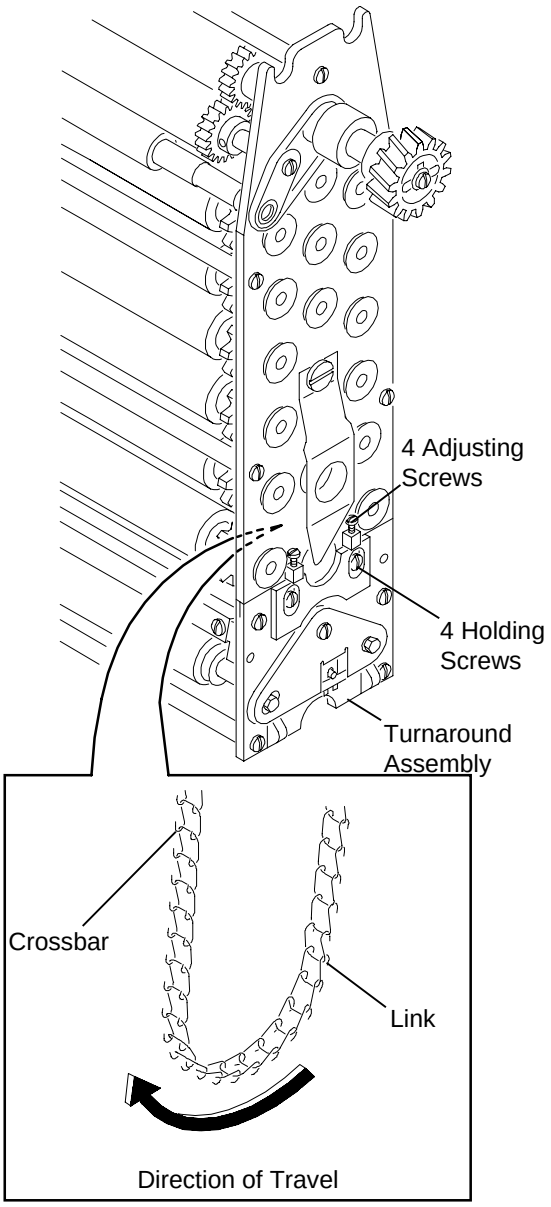

H048_0125CCB
H048_0125CA

Important

Before you begin this procedure, the “Ready” light on the PROCESSOR must be illuminated so that the RACK is in solution at operating temperature.

[1] With the “Ready” indicator illuminated, de-energize the PROCESSOR.

[2] Remove the TOP COVER, EVAPORATION COVER, and RACK.

[3] Loosen the 4 HOLDING SCREWS.

[4] Allow gravity to provide full tension on the TURNAROUND by holding the RACK above the work surface.

[5] Rotate the DRIVE GEAR one full rotation.

[6] Tighten the 2 HOLDING SCREWS on the drive side.

[7] Place the RACK on the work surface.

[8] On the drive side of the RACK, tighten the 2 ADJUSTING SCREWS until both SCREWS make contact with the SIDEPLATE of the TURNAROUND.

[9] Loosen the 2 HOLDING SCREWS on the drive side.

[10] Rotate the 2 ADJUSTING SCREWS on the drive side counterclockwise one full rotation.

[11] Rotate the DRIVE GEAR one full rotation.

[12] Tighten the 2 HOLDING SCREWS on the drive side.

[13] On the nondrive side of the RACK, rotate the 2 ADJUSTING SCREWS until the distance between the 2 SIDEPLATES on the nondrive side is the same distance as the distance between the 2 SIDEPLATES on the drive side.

[14] Assemble the PROCESSOR and check that it operates correctly.

Installing the CHAIN

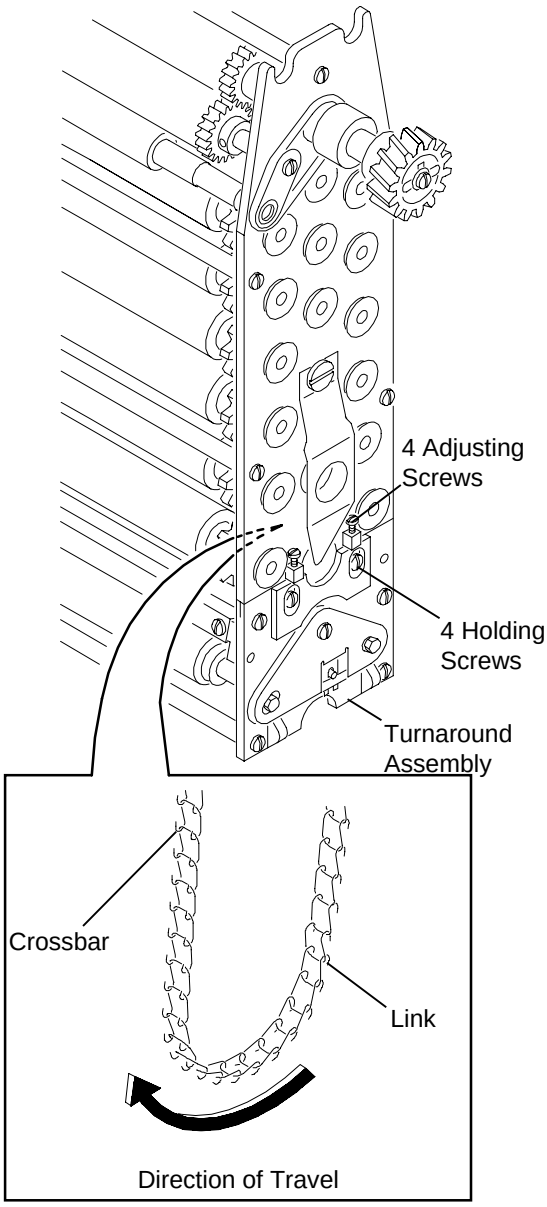

H048_0125CCB
H048_0125CA

[1] De-energize the PROCESSOR.

[2] Remove:

- TOP COVER
- EVAPORATION COVER
- YOKE
- RACK

[3] To open the CHAIN, rotate a SCREWDRIVER under the open end of each LINK.

[4] Install the CROSSBAR of each LINK in the direction of travel, with the LINKS opening outward.

[5] Fasten the new CHAIN to the existing CHAIN.

[6] Pull the existing CHAIN through the RACK until the new CHAIN is in the correct position.

Important

When you close the open LINK of the new CHAIN, do not deform the LINK.

[7] Disconnect the existing CHAIN from the new CHAIN.

[8] Fasten the ends of the new CHAIN together.

[9] Adjust the CHAIN. See Page 2–8.

[10] Assemble the PROCESSOR and check that it operates correctly.

Removing the DRIVE ROLLER from the RACK

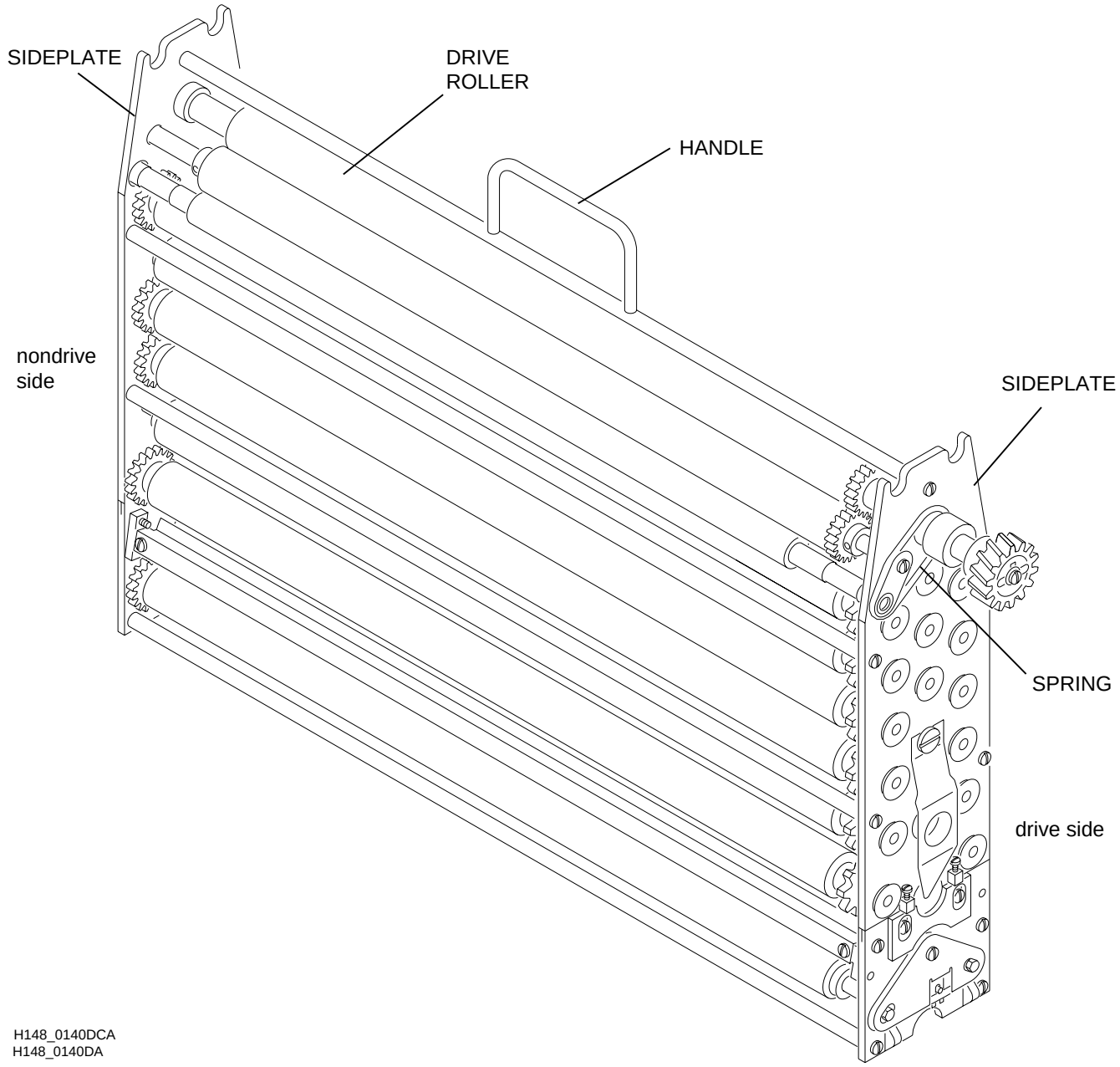

H148_0140DCA
H148_0140DA

Important

This procedure applies to the DEVELOPER, FIXER, and WASH RACKS.

[1] De-energize the PROCESSOR.

[2] Remove the TOP COVER and EVAPORATION COVERS.

[3] Remove the RACK, using the DRIP TRAY.

[4] Remove the 2 SCREWS and the HANDLE.

[5] Remove the SPRING at each end of the RACK.

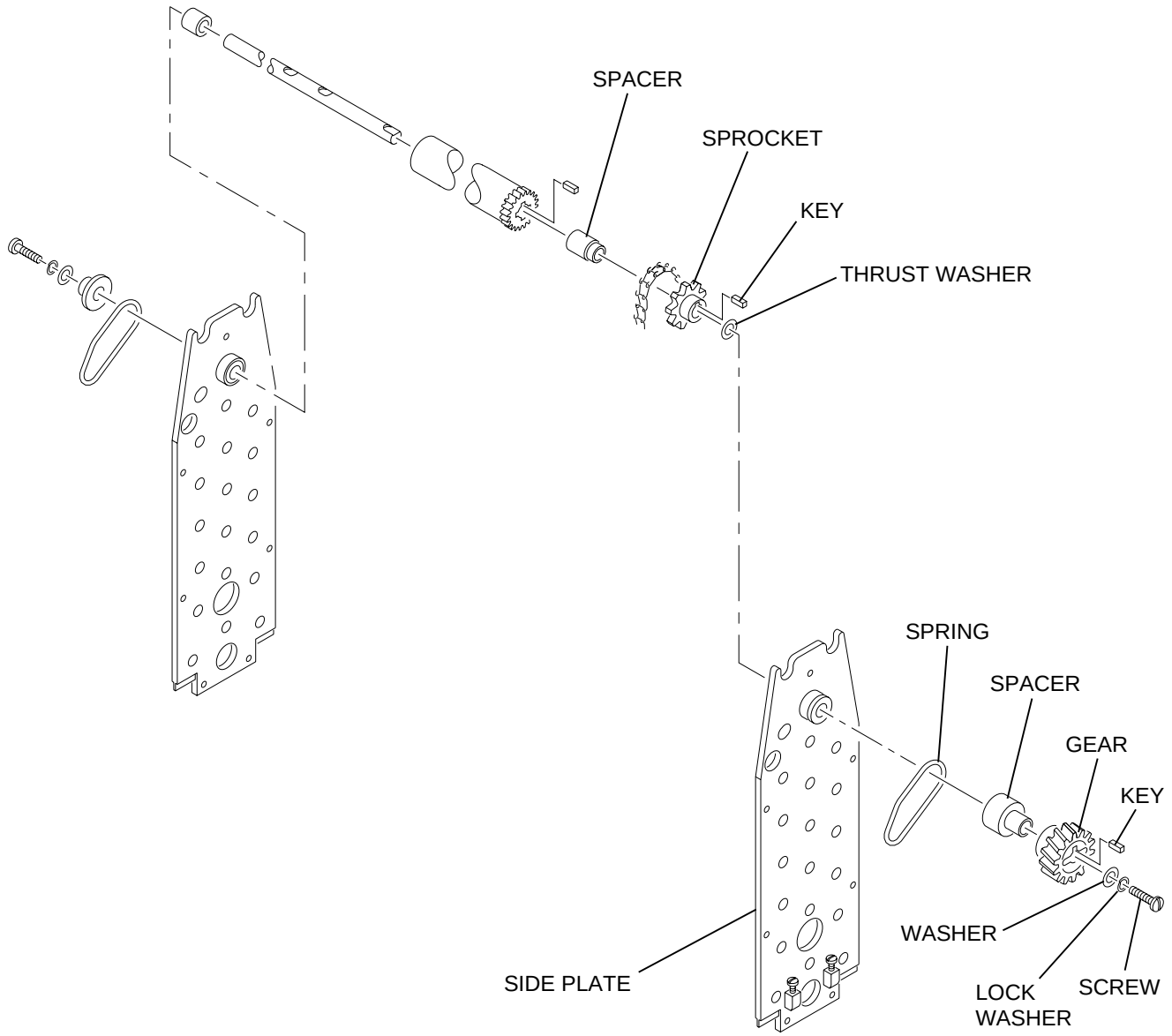

H148_0119DCA
H148_0119DA

[6] Remove the SCREWS, LOCK WASHERS, KEY, GEAR, and SPACERS from the 2 SIDEPLATES.

[7] Rotate the SHAFT until the KEY is up.

[8] At the nondrive side of the RACK, pull the ROLLER until you have access to the KEY in the SPROCKET.

[9] Remove the KEY from the SPROCKET and ROLLER.

[10] At the nondrive side, pull the SHAFT free of the drive SIDE PLATE.

[11] Remove the THRUST WASHER, SPROCKET, and SPACER.

[12] At the nondrive side, remove the SHAFT from the nondrive SIDE PLATE.

[13] Remove the DRIVE ROLLER.

Disassembling the TURNAROUND

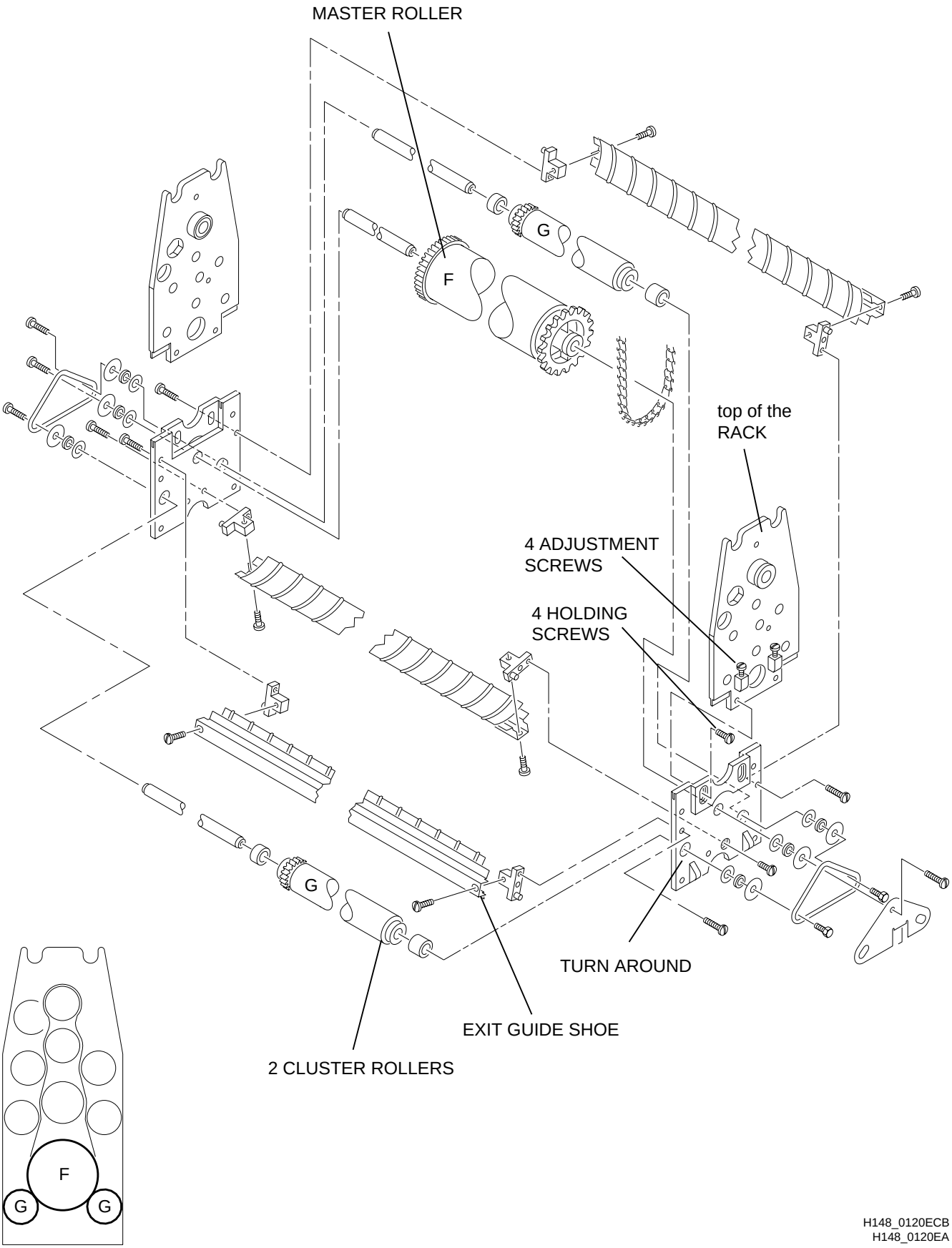

H148_0120ECB
H148_0120EA

Note

The diagram indicates the WASH RACK; however, the following procedure is the same for all RACKS.

[1] De-energize the PROCESSOR.

[2] Remove the TOP COVER, SPLASH GUARD, and RACK.

[3] Loosen the 4 ADJUSTMENT SCREWS.

[4] Remove the 4 HOLDING SCREWS.

[5] To open the CHAIN, rotate a SCREWDRIVER under the open end of each LINK.

[6] Remove the top of the RACK from the TURNAROUND.

[7] Remove:

- EXIT GUIDE SHOE and the 2 BRACKETS
- 2 SPRINGS and LOCKING PLATE from the TURNAROUND
- 2 CLUSTER ROLLERS

[8] From the nondrive side, pull the SHAFT from the MASTER ROLLER.

[9] Remove the TURNAROUND ASSEMBLY.

[10] After you install the ROLLER again, adjust the CHAIN. See Page 2–8.

[11] Assemble the PROCESSOR and check that it operates correctly.